Study Material For Boiler Operation Engineer (BOE) Exams

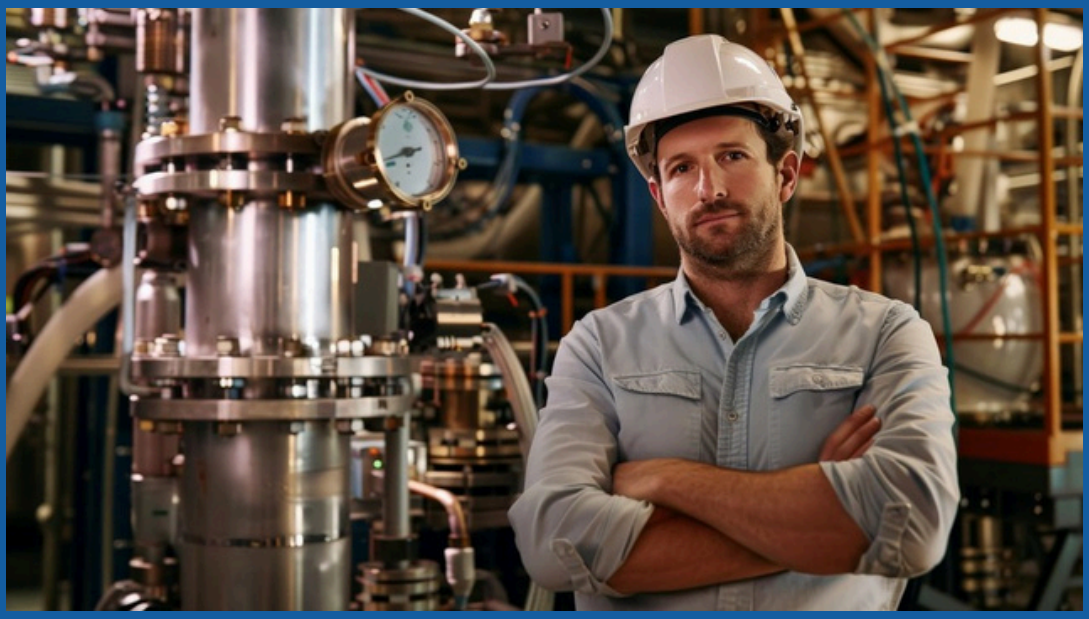

Theory, Numerical Problems, MCQs and Boiler Drawing Problems from BOE Exams

Amazon Flipkart Pothi

PROENGR.IN

SUDESH K JAIN

Paper-1(Boiler Engineering-1)

Time: 3 Hours Full Marks: 100

PART - A

1. Answer all the questions. **(2 x 10)**

a) What is WP and MAWP of a boiler?
b) What are the design criteria for boilers?
c) What is a field-assembled boiler?
d) What is a badge plate?
e) What are the functions of studded waterwalls?
f) Why does a safety valve pop fully open instantly?
g) What is the difference between the "V" and "UV" ASME symbol stamps on safety valves?
h) How may a steam trap malfunction?
i) What is indicated if loose bricks or pieces of brick are on the grates?
j) Why is coal ground to a fine powder?

PART - B

2. Answer any five from the given questions. **(4 x 5)**

a) What is a pulveriser? How is the coal fed to the pulveriser at the proper rate?
b) What types of gauge glasses are used on boilers?
c) What is the function of the water seal in a large boiler furnace?
d) What are nozzles in boiler design? Explain all types of bed nozzles used in various boilers with diagram.
e) Has an authorized inspector any right to disagree with the manufacturer's records and call for a requalification of a welder or to have physical tests made? When an unqualified welder is available for making a fusion-weld boiler repair, what two principles would determine the type of repair that may be made?
f) What is type A and type B liquid-penetrant inspection? Name the two types of ultrasonic principles used in non-destructively testing material to be used for pressure-vessel parts.
g) What are the most common staying methods used on an HRT boiler? Name three causes of bagging of the shell of an HRT boiler.

3. Answer any four of the following questions. **(10 x 4)**

a) A chain grate stoker is used to burn bituminous cool having 10% moisture and 10% ash. The higher calorific value of coal is 7000 kcal/kg. The steam generator produces steam at the rate of 10,000 kg per hour. It uses 600 kcal to evaporate 1 kg of feed water entering the boiler and super heat it to the final temperature, calculate the following:
(i) Hourly coal supply
(ii) Grate area
(iii) Grate length if grate width is 5 metres.

b) A boiler furnace using 50% excess air burns coal with following composition; C = 0.77, H_2 = 0.05, O_2=0.08, S = 0.02, N_2 = 0.02 and Ash = 0.06. The flue gases enter the chimney at 324 °C and atmospheric temp. is 16 °C. Determine the heat carried away by the flue gases in kJ/kg of coal. (C_P is 1.007 kJ/kg for O_2, N_2 and air and 1.05 kJ/kg for CO_2 and SO_2 from flue gas; Heat carried away per kg of moisture from flue gas = 2930 kJ/kg)

c) **(i)** In a steam power station, the coal consumption is 0.4 kg per kWh output. If the calorific value of coal is 6800 kcal per kg, boiler efficiency is 70% and mechanical and electrical efficiency of alternator is 90%. Prepare roughly the heat balance sheet for the power station. **(6)**
(ii) The daily output of a steam power station is 18×10^5 kWh. If the coal consumption is 700 tonnes per day, calculate the thermal efficiency of power station. **(4)**

d) A solid fuel contains 74% carbon and 16% ash. The ash discharged from the furnace contains 20% carbon. Estimate:
(i) the weight of carbon lost in the ash per kg of fuel
(ii) the percentage carbon burned
(iii) the heat lost by the incomplete combustion

PART – C

4. Fill the nominations missing in the given diagrams. **(5 x 4)**

a) Cyclone Separator

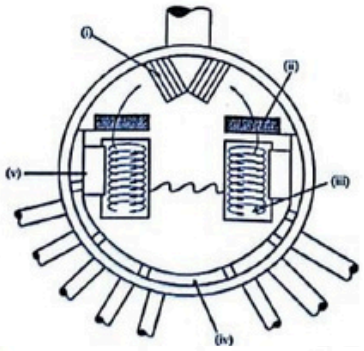

b) AFBC Boiler

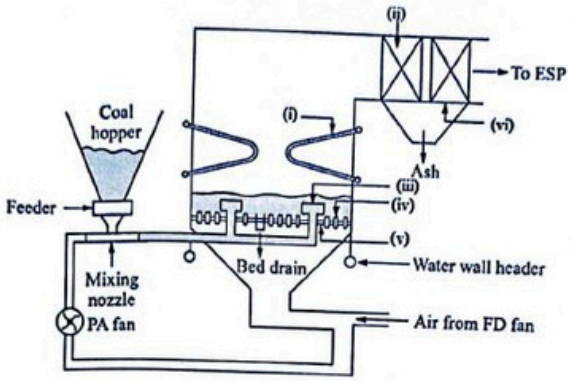

c) Spray type attemperator

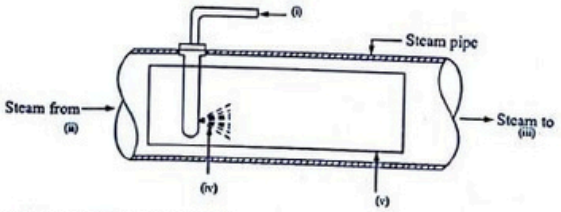

d) Mechanical ash handling system

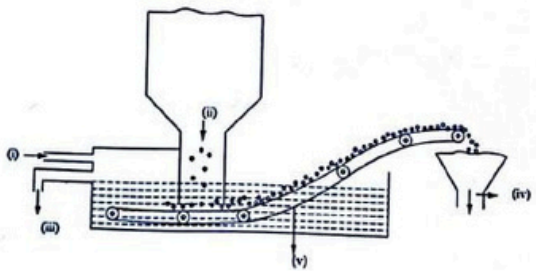

Paper-2(Boiler Engineering-2)

Time: 3 Hours Full Marks: 100

PART - A

1. Answer all the questions. **(2 x 10)**

a) How much heat is added to 100 lb of water to raise the temperature from 60 ^{0}F to 70 ^{0}F?
b) Define differential pressure, atmospheric gauge pressure, absolute pressure.
c) What is the name of the apparatus that makes a mechanical pressure gauge work? How it works?
d) How is a welded boiler stress relieved?
e) A boiler has a pressure of 265 psi and a 3" diameter safety valve disc. What is the total force acting on the safety valve disc?
f) What is a condensate polisher?
g) Why should iron be removed from makeup water?
h) How is the return condensate percentage in feedwater determined?
i) What is abrasion and fouling of the tubes?
j) What is fuel-to-steam efficiency?

PART – B

2. Answer any five from the given questions. **(4 x 5)**

a) What is the heating surface in square feet of a scotch marine firetube boiler that contains fifty-four 3" tubes and a 24" ID flue? The boiler is 12'- 6" long. The heating surface of the tube sheets may be disregarded.
b) What is the heating surface of a horizontal return tubular firetube boiler that is 14' long and 6' in diameter, and contains eighty-six 2" tubes? Half of the shell is exposed to the furnace. Disregard the heating surface of the tube sheets.
c) List and describe three classes of fuel oil burners with regard to their methods of atomization.
d) What does a blowing whistle on top of a water column indicate? Also mention what appliances may be attached to a water column?
e) What is a continuous emissions monitoring system? What attention must be given to a CEMS?
f) What is a totalizing flowmeter? How are these important to boiler plant efficiency?
g) What is the purpose of an electrical conductivity test of boiler water. Mention some ways to reduce the oxygen content of boiler water? Why is hydrazine used for oxygen control on high-pressure boilers and note the role of chelants in water treatment.

3. Answer all of the following questions. **(10 x 4)**

a) **(i)** Calculate the quantity of cooling water required for a jet condenser to condense 40 kg of steam per minute. The vacuum in condenser is 710 mm of mercury (Barometer 760 mm of mercury). The inlet temperature of cooling water is 14 ^{0}C. The latent heat of steam 576 is kcal/kg. **(7)**
(ii) The vacuum in a condenser is 68 cm of Hg with barometer reading 76 cm of Hg. lithe inlet and outlet temperatures of cooling water to a condenser are 28 ^{0}C and 42 ^{0}C respectively, calculate the condenser efficiency. **(3)**
b) Determine the height of chimney to get net draught of 12 mm if the total draft losses are 4 mm. The temperature of air is 25 ^{0}C and the temperature of chimney gases is 300 ^{0}C. The mass of air used per kg of fuel used is 18 kg. One kg of air occupies a volume of 0. 7734 m^3 at N.T.P.
c) Two boilers one with a super heater and the other without a super heater are supplying equal quantities of steam into a common main. The temperature of steam from the boiler with super heater is 330 ^{0}C and that of steam in the main is 260 ^{0}C. If the pressure in the boiler and the main is 15 kg/cm^2 and specific heat of superheated steam is 0.54 determine the quality of steam supplied by boiler without super heater.

d) A boiler working at a pressure of 10 bar generates 2100 kg of dry and saturated steam per hour. The feed water is heated by an economiser to a temperature of 105 °C. Coal consumed is 208 kg and calorific value of coal is 30200 kJ/ kg. If 12% of coal remains unburnt determine:
(i) thermal efficiency of boiler
(ii) thermal efficiency of boiler and grate combined.

PART – C

4. Fill the nominations missing in the given diagrams. **(5 x 4)**

a) Test Clamp or Gog

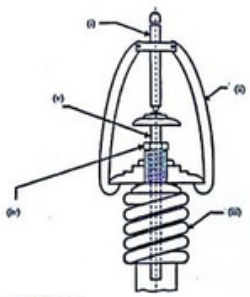

b) Sectionalisation of ESP

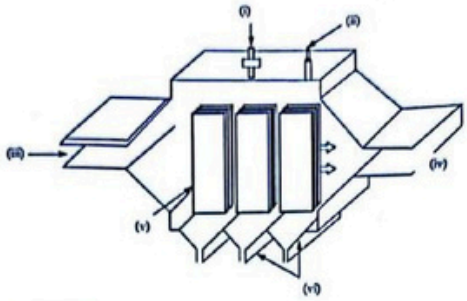

c) Turbine type flow meter

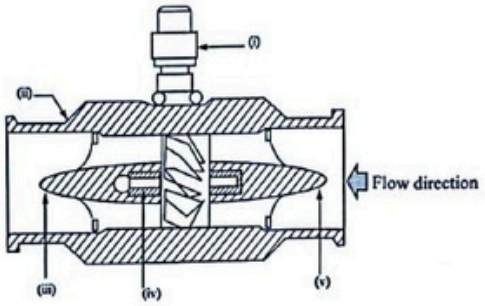

d) Wet Scrubber

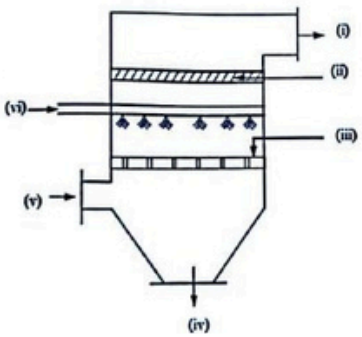

Paper-3(Engineering Drawing)

Time: 3 Hours Full Marks: 100

Missing dimensions, if any, may be suitably assumed.

PART - A

1. Answer all the questions. **(2 x 10)**

a) Name some typical structural discontinuities that can be found in a welded joint.
b) What is meant by double-butt welding and single-butt welding?
c) What is the difference between isometric drawing and isometric projection or view?
d) Why a nut of a bolt head is chamfered? Why sometimes a nut is chamfered at both ends?
e) What the necessity of folding a drawing print?
f) List out the order of inking a pencil drawing.
g) List out the information contained in a typical title block and a materials list.
h) What is a French-curve and where it is used?
i) Why drawing boards are not made from one pieces?
j) What is an eyebolt and for what purpose it is used?

PART – B

2. A figure is given with its isometric view and three orthographic views are also given. In each case some lines are missing in orthographic view(s). Reproduce the given views, draw the isometric view, and add the missing line(s) in each case.

(30)

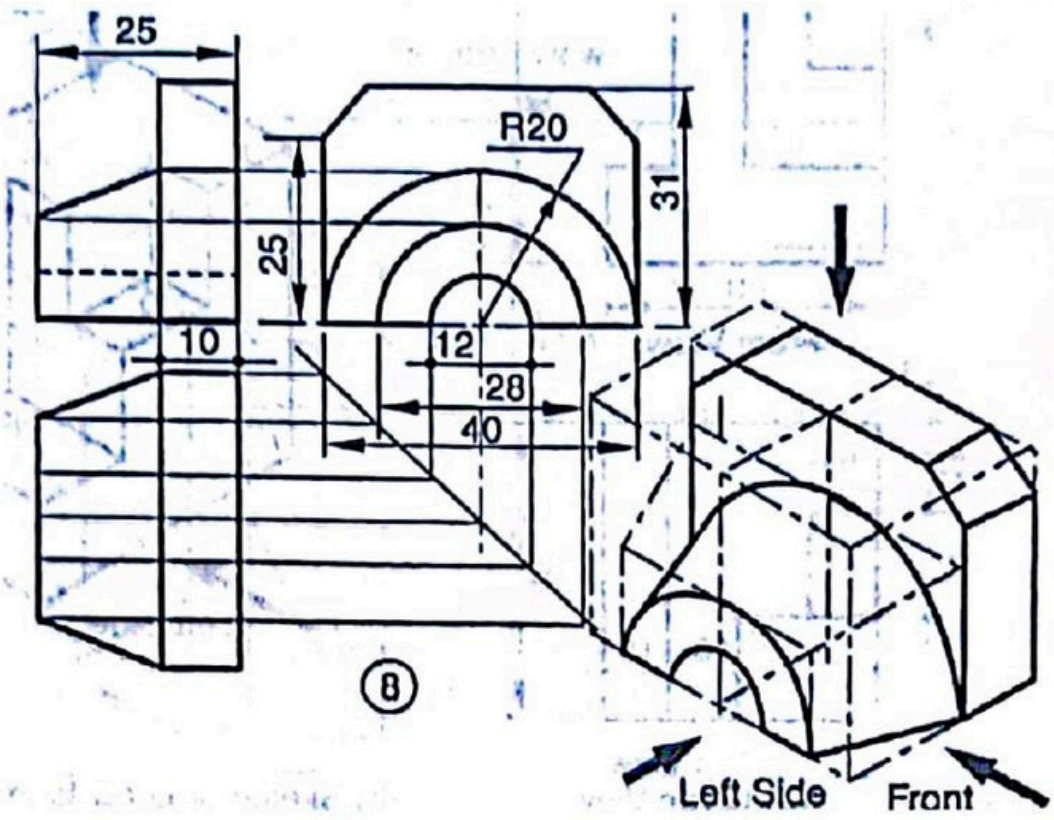

3. Front and right-side views of a block are given in below Figure. Draw the given views and add the top view. (30)

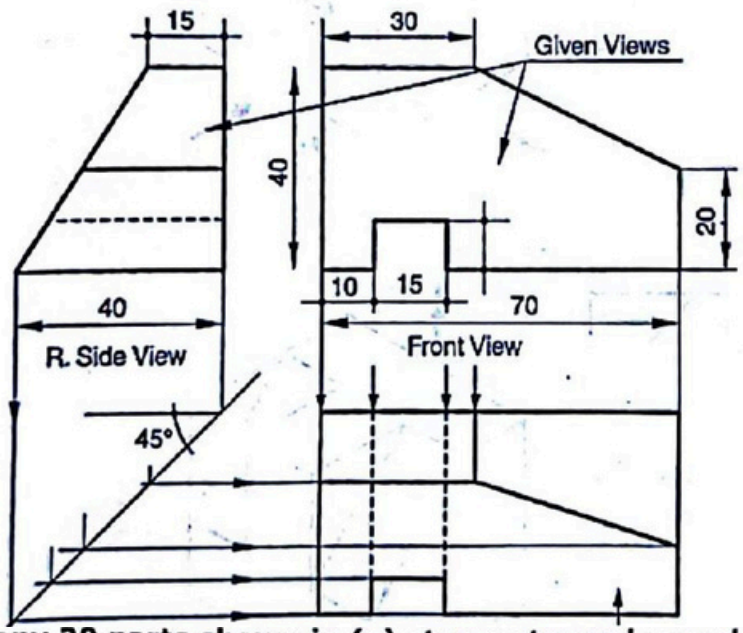

4. Write name of any 20 parts shown in (a) steam stop valve and ball valve. (20)

(a)

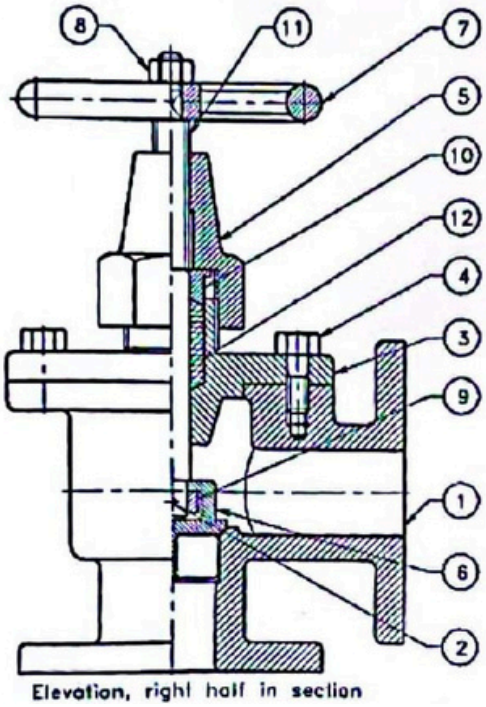

Elevation, right half in section

(b)

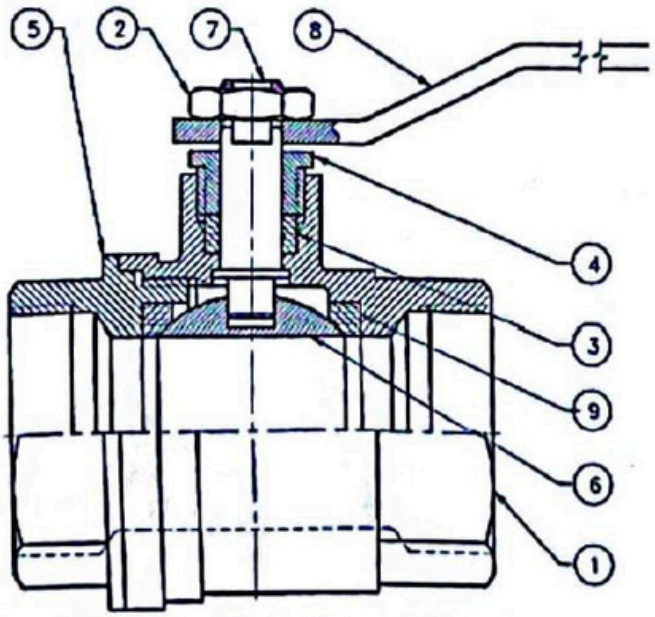

Elevation, top half in section