Study Material For Boiler Operation Engineer (BOE) Exams

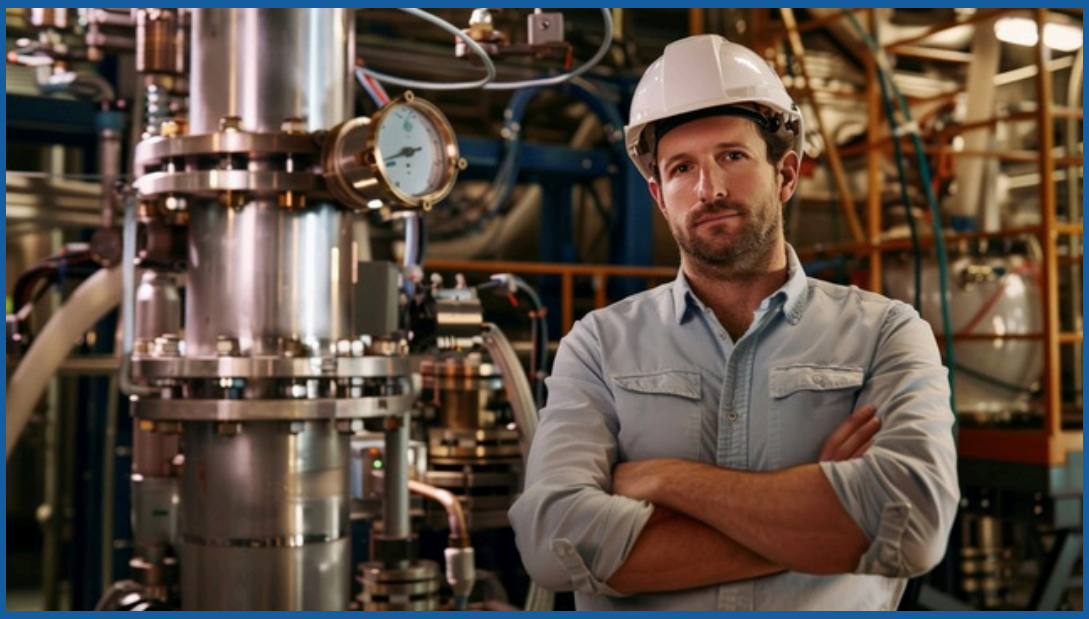

Theory, Numerical Problems, MCQs and Boiler Drawing Problems from BOE Exams

Amazon Flipkart Pothi

PROENGR.IN

SUDESH K JAIN

EXAMINATION FOR CERTIFICATE OF PROFICIENCY
AS A BOILER OPERATION ENGINEER

(Under Boiler Operation Engineers' Rule, 2025)

Boiler Technology - I

6th June 2026

(TIME : 10-00 A.M. TO 1-00 P.M.)

(Max. Marks—100)

Instructions to Candidates:—

(1) Attempt any ***five*** questions.

(2) Question No. 1 is ***Compulsory***.

(3) Answer each next main question on a ***new*** page.

(4) Answer all parts of main question in sequence. Scattered answers may not be evaluated

(5) Answer in brief and to the point attract ***more*** Marks.

(6) Assume suitable data, if ***necessary***.

Marks

1. (*a*) Out of the given options select the most appropriate option as an answer :— 10

(*i*) According to the heat transfer equation, the heat transfer rate varies with ..... .

(*a*) The mass flow rate of steam

(*b*) The flow rate of secondary fluid

(*c*) The temperature rise of the primary fluid

(*d*) The mean temperature difference between the two fluids.

(*ii*) Which of the following fuels requires the lowest amount of excess air for complete combustion ?

(*a*) Indian coal

(*b*) Propane

(*c*) LDO

(*d*) Bagasse.

(*iii*) Which of the following can be measured by "Bolometer" ?

(*a*) Thermal Radiations

(*b*) Electrical Signals

(*c*) Optical Inputs

(*d*) Temperature Inputs.

(*iv*) How does the heat carrying capacity of steam compare with water ?

(*a*) It is less than water

(*b*) More than water

(*c*) It is about the same

(*d*) It depends on the temperature.

[*Turn over*

AMIE STUDY CIRCLE | AMIESTUDYCIRCLE.COM | WHATSAPP: 91-9412903929

Marks

(v) Which of the following are principal dissolved solids that are scale forming ?

(a) Calcium bicarbonate
(b) Carbonates and sodium sulphates
(c) Carbonates and sulphates of calcium and magnesium
(d) Bicarbonates of sodium and magnesium.

(vi) Primary effect of CO_2 in a steam system is ..... .

(a) The formation of scale
(b) The formation of sludges
(c) Corrosion
(d) Acidity.

(vii) A co-generation system is also known as

(a) Reversible system
(b) Re-generation system
(c) Combined heat and power system
(d) Brayton Cycle system.

(viii) If excess air is 15.38% in FO fired boiler, the % O_2 in flue gases is

(a) 4.2 %
(b) 2.8 %
(c) 1.4 %
(d) 3.5 %.

(ix) During boiler operation, white smoke from the chimney generally indicates ..... .

(a) Incomplete combustion
(b) Excess air in combustion
(c) Presence of unburnt carbon particles
(d) High furnace draft.

(x) What is the relationship between longitudinal stress and circumferential stress ?

(a) They are the same
(b) Longitudinal stress is twice circumferential stress
(c) Circumferential stress is twice longitudinal stress
(d) There is no fixed relationship between the two.

(b) Answer following questions in short :— 10

(i) What is steam reheating? State advantages.

(ii) Why is reinforcement required for openings in boiler drums as per IBR, and how do large openings affect joint efficiency and safe working pressure?

(iii) Explain how a fusible plug works and why it is not required in power boilers.

(iv) Calculate the power required for a boiler feed water pump that delivers 20 tones per hour of water against a total head of 110 meters, operating at an efficiency of 75%.

(v) A water tube boiler furnace water wall panel consists of 50 vertical tubes, each of Ø50.8 mm × 3.66 mm thick and 12 m long. Calculate the total heating surface area of the panel in m^2.

Marks

2. (a) What is LMTD ? What is the importance of LMTD in Heat Exchanger ? What is unit of LMTD ? 4

(b) Define unburned carbon loss in a coal-fired boiler. Explain its causes and its impact on boiler efficiency and environment and suggest methods to minimize it. 5

(c) Describe AFBC and CFBC boilers and their characteristics. 5

(d) A boiler tube has an outer diameter of 63.5 mm and a wall thickness of 3.6 mm. The tube material has an ultimate tensile strength (UTS) of 450 MPa and a factor of safety is 6. Estimate the internal design pressure of the tube (assume thin-walled cylinder). 6

3. (a) Differentiate between radiant and convective superheaters. Describe their performance under boiler part-load conditions. 4

(b) Discuss the operation of a pulverized-coal burner. 5

(c) Where is a ball float steam trap preferred? Explain with reasoning. Also describe its construction and working. 5

(d) A boiler generates 10 TPH of 0.9 dry saturated steam at 10 bar with feedwater temperature of 45°C. The boiler efficiency is 80%, and the coal used has a GCV of 5,000 kcal/kg. 6

Calculate :

(i) The heat required per kg of steam.

(ii) The coal consumption per hour.

(iii) Give practical methods to improve boiler efficiency without capital investment.

4. (a) Explain the mechanism of Caustic Embrittlement related to water side corrosion of boiler tube and how it is prevented ? 4

(b) A 50 TPH boiler shows a reduction in efficiency from 82% to 75% over a period of two months of operation. 5

(i) Identify the probable causes and explain their effect on boiler efficiency.

(ii) Suggest prioritized corrective measures to reduce steam generation cost.

(c) List any five critical interlocks and trips provided in a boiler. Explain how each contributes to safe boiler operation. 5

(d) In a food processing industry, steam at a pressure of 15 kg/cm² is used to heat 10 tonnes per hour (TPH) of milk from 40°C to 80°C. It is proposed to install a pressure reducing valve (PRV) to reduce the steam pressure from 15 kg/cm² to 3 kg/cm². 6

The specific heat of milk is 1.0 kcal/kg°C.

(i) Determine the dryness fraction of steam after passing through the PRV.

(ii) Calculate the steam savings (kg/hr) achieved due to this pressure reduction.

[*Turn over*

Pro Engr | proengr.in | WHATSAPP: 9410524390

Marks

5. (*a*) Explain why a counter-flow arrangement is preferred in economizers. Also, define approach temperature and discuss its significance in the design and safe operation of economizers. 4

(*b*) Compare subcritical, supercritical, and ultra-supercritical boilers in terms of operating pressure, temperature, efficiency, and materials used. 5

(*c*) A bagasse-fired boiler operating at full load shows 8% O_2 and 0.1% CO in the flue gas. Explain what these readings indicate about the combustion condition. Also, explain the possible reasons for CO formation and suggest measures to improve combustion efficiency. 5

(*d*) Boiler A costs ₹40 lakh with 82% efficiency, and Boiler B costs ₹46 lakh with 86% efficiency. Both produce 10 TPH of dry saturated steam at 10 bar (g). Feedwater temperature is 85°C. Operating hours = 6,000 h/yr. 6

Fuel used is LSHS with GCV = 10,500 kCal/kg, priced at ₹50/kg.

Determine :

(*i*) Annual fuel cost for each boiler.

(*ii*) Annual fuel saving achieved by selecting Boiler B.

(*iii*) Discuss briefly whether the higher efficiency of Boiler B justifies the higher initial cost in long-term operation.

6. Write short notes on (any ***four***) :— 20

(*a*) Procedure for preparing a boiler for statutory IBR inspection and hydraulic test.

(*b*) Erosion and corrosion in boiler pressure parts, their causes and preventive measures.

(*c*) Demineralization (DM) plant.

(*d*) Jet condenser and surface condenser – construction, working and comparison.

(*e*) Pressure-operated condensate lifting pump.

Con 264

DIRECTORATE OF STEAM BOILERS
(MAHARASHTRA STATE)

EXAMINATION FOR CERTIFICATE OF PROFICIENCY
AS A BOILER OPERATION ENGINEER
(Under Boiler Operation Engineers' Rule, 2025)

Boiler Technology – II

6th June 2026

(Time : 2-30 P.M. to 5-30 P.M.)

(Max. Marks—100)

Instructions to Candidates :—

(1) Attempt any ***five*** questions.
(2) Question No. 1 is ***Compulsory.***
(3) Answer each next main question on a ***new*** page.
(4) Answer all parts of main question in sequence. Scattered answers may not be evaluated.
(5) Answer in brief and to the point attract ***more*** Marks.
(6) Assume suitable data, if ***necessary.***

Marks

1. (*a*) State ***true*** or ***false*** :— **10**

(*i*) Sudden trip of FD fan while ID fan is running can lead to furnace implosion.

(*ii*) Pitot tube instrument used for measurement of specific gravity of liquid fuel.

(*iii*) A high CO_2 reading in flue gas always indicates optimum combustion.

(*iv*) The temperature of flue gases at air heater inlet should be above dew point temperature of flue gases.

(*v*) High flue gas temperature at economiser outlet always indicates poor boiler efficiency.

(*vi*) Sudden low water level indication should be ignored until confirmed.

(*vii*) Superheated steam has higher density than saturated steam at the same pressure.

(*viii*) High ash content in coal reduces boiler efficiency due to increased heat loss in ash.

(*ix*) Carryover in boiler is always due to high water level.

(*x*) Radiography is mainly used for detecting internal defects in welds.

(*b*) Define :— **5**

(*i*) Latent heat of vaporization.
(*ii*) Steam pipe as per Boiler Act.
(*iii*) Equivalent evaporation.
(*iv*) Circulation ratio.
(*v*) Heat balance of a boiler.

Turn over

Pro Engr | proengr.in | WHATSAPP: 9410524390

(a) Convert :—

(i) 15 mmWC = 147.1 Pa

(ii) 1 in² = 645.16 mm²

(iii) 1 Btu = 0.252 kcal

(iv) 1 bar = 10.197 m of water column

(v) 1 m³/hr of water = 0.278 kg/s.

2. (a) Name the commonly used chemicals for the treatment of the following in boiler water :— 4

(i) Scale formation - Scale inhibitor

(ii) Hardness - Tri sodium phosphate

(iii) Dissolved oxygen - oxygen scavenge

(iv) pH control. - pH Buffers

(b) Why have refractory furnace walls been largely replaced by water-cooled furnace walls in modern boilers ? 5

(c) During boiler operation, a safety valve fails to operate even when the pressure exceeds the set value :— 5

(i) What immediate actions will you take to ensure safety ?

(ii) What steps will you take to investigate and rectify the problem ?

(d) Calculate height of chimney to produce draught of 18 mm of water column when temperature of flue gases in chimney is 300° C and boiler room temperature is 42° C and supply quantity of air is 20kg per kg of fuel. 6

CO.06

3. (a) What are the insulating materials being used in boiler house ? State some important aspects of the insulating materials. 4

(b) Explain the working of a Distributed Control System (DCS) and describe its role in monitoring and controlling boiler parameters. 5

(c) Explain the advantages and limitations of spreader stokers in modern boilers. 5

(d) Calculate the power required to drive a forced draft (FD) fan which maintains a draft of 80 mm of water column, under the following conditions :— 6

- Density of air = 1.29 kg/m³
- Air supplied per kg of coal = 18 kg
- Mass of fuel burnt = 2 kg/s
- Efficiency of fan = 80%

Marks

4. (a) Explain the term air ingress in a boiler flue gas system. Discuss its causes, effects on boiler performance, and the methods to detect and prevent air ingress. 4

(b) Explain the procedure for taking an economiser into service and taking it out of service while the boiler is on steam. State the need for isolating the economiser. 5

(c) List the major emissions from a coal-fired power plant. Explain their control methods, environmental/health effects, and typical emission limits. 5

(d) A process requires 6.5 tonnes/hr of dry saturated steam at 7 kg/cm^2 (g) having a specific volume of 0.28 m^3/kg. 6

Neglect pressure drop. The maximum permissible velocity is 30 m/s.

(i) Calculate the minimum internal diameter of the pipe.

(ii) If the selected pipe has an internal diameter of 200 mm, determine the actual velocity.

5. (a) What are the merits of biomass based briquettes as compared to coal or oil ? 4

(b) A boiler in operation suddenly shows abnormal drop in water level along with hissing sound inside the furnace, indicating a possible tube failure :— 5

(i) Explain the immediate actions to be taken by the operator to ensure safety.

(ii) Describe the systematic procedure for shutdown, inspection, and repair of the boiler.

(iii) Explain why it is dangerous to continue operation with a leaking tube.

(c) Explain incomplete combustion with reference to :— 5

(i) causes of incomplete combustion

(ii) the products of incomplete combustion.

(d) A chemical manufacturing plant generates 30 T/hr of steam using a furnace oil-fired boiler. The plant proposes to switch to natural gas under the Perform, Achieve and Trade (PAT) scheme to avail energy-saving benefits. 6

The following data are available :

Steam Generation :

- Steam generation rate = 30 T/hr
- Feed water temperature = 60°C
- Enthalpy of steam = 660 kcal/kg.

Pro Engr | proengr.in | WHATSAPP: 9410524390

Furnace Oil :

- GCV = 10,200 kcal/kg
- Cost = Rs. 52,000 per tonne
- Carbon content = 84%
- Boiler efficiency = 80%.

Natural Gas :

- GCV = 9,500 kcal/Sm^3
- Density = 0.8 kg/Sm^3
- Cost = Rs. 45/Sm^3
- Carbon content = 74%
- Boiler efficiency = 82% .

Operating hours per year = 8000 hrs.

Calculate the following :

(*i*) Fuel consumption for furnace oil and natural gas per hour.

(*ii*) Cost of steam generation (Rs. / tonne of steam) for both fuels and identify which fuel is more economical.

(*iii*) Annual CO_2 emissions for both cases and the percentage reduction in emissions when switching to natural gas.

6. Write short notes on any ***four*** of the following :— 20

(*a*) Slagging and fouling in boilers, their causes and effects on boiler performance.

(*b*) Procedure for boiler lay-up (wet and dry method).

(*c*) Sliding pressure operation in supercritical boiler.

(*d*) Types of boiler furnaces used in bagasse fired boilers in sugar industries.

(*e*) Ultrasonic testing of boiler components.

———————

Cos 265

DIRECTORATE OF STEAM BOILERS

(MAHARASHTRA STATE)

EXAMINATION FOR CERTIFICATE OF PROFICIENCY
AS A BOILER OPERATION ENGINEER

(Under Boiler Operation Engineers' Rule, 2025)

Engineering Drawing

7th June 2026

(TIME : 10-00 A.M. TO 1-00 P.M.)

(Max. Marks—100)

Instructions to Candidates :—

(1) Attempt any ***five*** questions.

(2) Question No. 1 is ***Compulsory***.

(3) Answer all parts of main question in sequence. Scattered answers may not be evaluated.

(4) Use suitable ***Scale*** if required.

(5) If required, Assume suitable ***data and clearly*** state your assumptions.

Marks

1. (*a*) Draw a neat, freehand proportionate schematic sketch of a liquid-expansion type steam trap showing its main components and indicating the direction of flow. **5**

(*b*) Draw neat and proportionate standard P&ID symbols for the following :— **5**

(*i*) Pneumatic signal

(*ii*) Orifice flow meter

(*iii*) Spring loaded safety valve

(*iv*) Pressure control valve

(*v*) Non return valve.

(*c*) Draw neat, freehand proportionate sketches of the following : **10**

(*i*) Swing check valve

(*ii*) Raised Face Weld Neck Flange

(*iii*) Globe valve

(*iv*) Buttweld Tee

(*v*) Concentric reducer.

2. (*a*) A pictorial view of an object is shown in Figure No. 1. **20**

Using either First Angle or Third Angle Projection, draw the following :—

(*i*) Front view

(*ii*) Top view

(*iii*) Side view

(*iv*) Indicate all essential dimensions.

The arrow indicates direction to obtain view from the front.

[*Turn over*

Pro Engr | proengr.in | WHATSAPP: 9410524390

Marks

3. (a) Draw neat freehand sketches of the following with proper labeling :— 10

(i) Steam drum showing internals and normal water level.

(ii) Acid cleaning circulation system used in three pass packaged type smoke tube boiler.

(b) Draw a neat, freehand proportionate sketch of following. Clearly label all important parts :— 10

(i) Boiler steam drum manhole opening

(ii) Resistance Temperature Detector (RTD)

(iii) Barometric condenser

(iv) Single V-butt welded joint

(v) Eye foundation bolt.

4. (a) Three views of an object are shown in Figure No. 2. Make an isometric drawing of this object. 10

(b) Draw a neat, freehand proportionate schematic sketch of a boiler safety valve, showing all the parts and clearly indicating the main components. 10

5. Draw proportionate freehand sketches of the following and label the important parts :

(i) Bourdon-type pressure gauge 5

(ii) Float-type boiler water level control assembly 5

(iii) Chain grate stoker 5

(iv) Typical vertical tubular air heater. 5

6. (a) Draw a neat, sketch of CFBC Boiler and name all important components. 10

(b) Draw typical schematic detailed P&I diagram of HP dosing system. Indicate all connected parts, piping, auxiliaries and controls with standard legends and symbols. 10

OR

Draw a neat, freehand proportionate schematic diagram of a conventional boiler showing the complete water, steam, air, fuel and gas circuits.

Figure No. 1

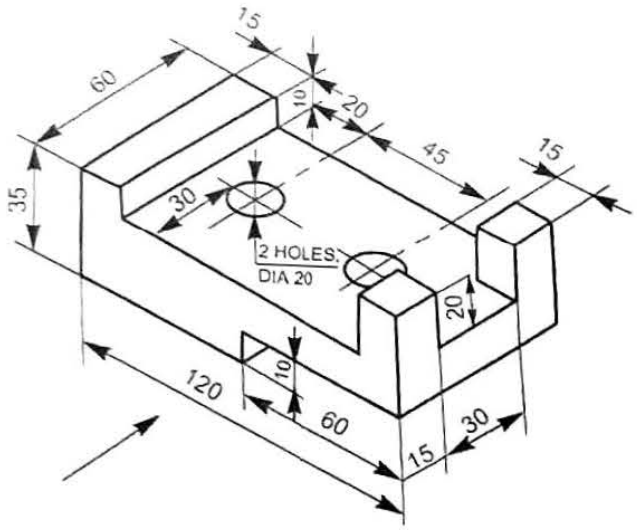

Figure No. 2 :

