Study Material For Boiler Operation Engineer (BOE) Exams

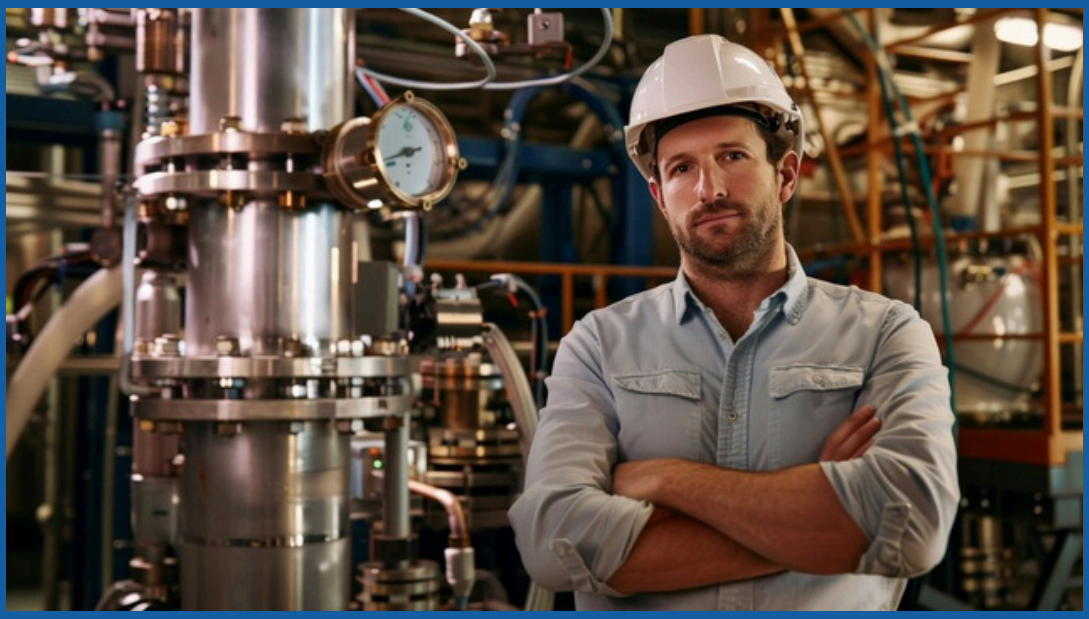

Theory, Numerical Problems, MCQs and Boiler Drawing Problems from BOE Exams

Amazon Flipkart Pothi

PROENGR.IN

SUDESH K JAIN

MAHARASTRA BOILER OPERATION ENGINEER EXAMINATION-2025
PAPER-1 (BOILER ENGINEERING-1)

Time: 3.00 Hours **Max. Marks: 100**

Instructions to Candidates:

1. Attempt any **FIVE** questions.
2. Question No-1 is **Compulsory**.
3. All questions carry equal Marks.
4. Answer in brief and to the correct point will attract **full marks**.
5. Draw neat sketches wherever **necessary** for correct explanations.
6. Assume suitable data, if **any**.

Q.1(A): Choose the correct options from the following: **[1x10=10]**

1: Bed coil tubes of a fluidized combustion boiler are studded……..

a) To increase heat transfer.	b) To minimize erosion of tubes.
c) Both A & B.	

2: Registry number of boiler is T/5658, the "T" in the number indicates that it is a ……..

a) Tower type boiler	b) Triple pass boiler
c) Tubular boiler	d) None of the above

3: Which loss is not considered while evaluating the boiler efficiency by indirect method?

a) Blow down loss	b) Unburnt loss
c) Air infiltration loss	d) Stack temperature loss

4: In once through boiler……..

a) Flue gas pass only in one direction	b) Steam is sent out only in one direction
c) Air is sent through same direction	d) There is no recirculation of water

5: High % of carbon monoxide presence in the flue gases of boiler is an indication of…….

a) High excess air	b) Complete combustion
c) Good control of pollutants	d) Low excess air

6: The rise in conductivity of boiler feed water indicates……

a) Rise in the TDS of feed water	b) Alkalinity of water
c) Drop in the TDS of feed water	d) Thermal conductivity of water

7: Arrange the following fuels in decreasing order of their GCV's (p)Bagasse (q)Furnace oil (r)Coal (s) Hydrogen

a) p-q-r-s	b) s-q-r-p
c) r-s-q-p	d) q-r-s-p

8: With the increase in pressure……

a) The boiling point of water decreases and enthalpy of evaporation increases.
b) The boiling point of water increases and enthalpy of evaporation decreases.
c) Both the boiling point of water and enthalpy evaporation decreases.
d) Both the boiling point of water and enthalpy evaporation increases.

9: The actual vacuum in a condenser is equal to……..

a) Barometric pressure + Actual pressure	b) Barometric pressure – Actual pressure
c) Gauge pressure + Atmospheric pressure	d) Gauge pressure - Atmospheric pressure

10: Coal is not burnt in suspension in ……

a) Chain-grate boiler	b) Fluidized bed boiler
c) Spreader stoker boiler	d) Pulverized fuel fired boiler

Q.1(B): Explain the following terms in brief: **[2x5=10]**

(a) Define "Accident" as per the Boiler Act-1923.
(b) Explain Hydrogen embrittlement and caustic embrittlement.
(c) Define hoop stress and its formula.
(d) Explain scaling and fouling.
(e) Explain Hard Grove Index (HGI).

Q.2(a): Explain the importance of safety interlocks in boiler operation. Discuss the various types of safety interlocks commonly used in boilers and their functions. [4]
Q.2(b): What are the different types of boiler mountings, what are their functions and why are they critical for ensuring boiler safety? [5]
Q.2(c): What is meant by heat transfer through radiation, conduction and convection? Provide examples for each method of heat transfer. [5]
Q.2(d): Calculate the total upward force on a valve disc 63.5mm in diameter, if safety valve neck diameter is 80NB and valve outlet diameter is 100NB and boiler steam pressure is 160Bar. [6]

Q.3(a): Why is individual trapping preferred over group trapping in a steam distribution system? [4]
Q.3(b): Explain the difference between Jet Condenser and Surface Condenser. [5]
Q.3(c): Explain Fluidized bed combustion. What is the difference between AFBC & CFBC Boiler? [5]
Q.3(d): A coal sample has 38% ash, 4% inherent moisture and 13% total Moisture, using suitable Emperial formula calculate UHV and GCV of the coal. [6]

Q.4(a): What are different Bi products of sugar industry and its use. [4]
Q.4(b): Discuss operational problems of spent wash fired boiler in sugar industry. [5]
Q.4(c): What is meant by NPSH and its effects on boiler feed pump. [5]
Q.4(d): A steam pipeline of 100mm outer diameter is not insulated for 100meters and supplying steam at 10kg/cm^2. Find out the annual fuel savings if the line is properly insulated with 65mm insulation material. Assume 7000 hours/year of operation. [6]
Given:

1. Boiler Efficiency	85%
2. Fuel oil cost	Rs. 32,000/tonne
3. Calorific value of fuel oil	10,300 Kcal/kg
4. Surface temperature without insulation	180*C
5. Surface temperature after insulation	75*C
6. Ambient temperature	30*C

Q.5(a): Why spiral wall design is adopted in super critical boiler? Why transition header is required in this case? [4]
Q.5(b): Why deaeration of feed water is required? Explain the working of Deaerator. [5]
Q.5(c): Describe Ion exchange process in demineralization plant (DM). How does it remove dissolved salts and what are some common challenges in the system maintenance? [5]
Q.5(d): A plant proposes to install an air pre-heater to pre-heat combustion air from 30*C to 160*C in the existing boiler. The other performance parameters of the boiler plant are as given below: [6]

1. Fuel used	Bio-mass
2. Bio-mass firing rate	28TPH
3. Sulphur in fuel	0.1%
4. GCV of fuel	2300 kCal/kg
5. Boiler Efficiency	70%
6. Flue gas temperature	300*C
7. Air requirement	4.5 kg/kg of fuel
8. Specific heat of combustion air	0.24 kCal/kg*C
9. Specific heat of flue gas	0.23 kCal/kg*C

Estimate the following:
1. The quantity of flue gas assuming no ash content in the fuel.
2. Heat transferred to the combustion air after installation of air preheater.

3. Exit flue gas temperature after installation of an air pre-heater and whether it is acceptable?

Q.6: Write short notes (Any FOUR): [4x5=20]

a) Departure from Nucleate Boiling.
b) RLA study of Boiler-Objective, Methodology and Benefits.
c) Materials for various pressure parts of water tube boiler.
d) Three elements' Drum Level Control in Boiler.
e) Chemical cleaning of water tube boiler.

MAHARASTRA BOILER OPERATION ENGINEER EXAMINATION-2025
PAPER-2 (BOILER ENGINEERING-2)

Time: 3.00 Hours **Max. Marks: 100**

Instructions to Candidates:

1. Attempt any **FIVE** questions.
2. Question No-1 is **Compulsory.**
3. All questions carry **equal Marks.**
4. Answer in brief and to the correct point will attract **full marks**.
5. Draw neat sketches wherever **necessary** for correct explanations.
6. Figure to the right indicates **full** Marks.
7. Assume suitable missing data, if any.

Q.1(A): State whether the following statements are TRUE or FALSE: [1x10=10]

1. For boilers operating at high pressures, radiant heat transfer accounts for a larger percentage of the total heat transfer compared to conduction and convection.
2. SO_2 emission in FBC boiler fired with high sulphur coal are controlled by adding Calcium Oxide to the Bed.
3. The best steam for indirect heating in most industrial processes is as dry as possible.
4. Superheated steam is used in LRSB.
5. In a boiler maximum pressure is seen in the drum, not in economizer.
6. The draft caused solely by the difference in weight between the column of hot gas inside chimney and column of outside air is known as induced draft.
7. Abrasiveness Index gives hardness of coal and Caking Index is a measure of Binding property of Coal.
8. One kg of CO needs 1.57kg of O_2 and produces 2.57kg of CO_2.
9. An increase in Steam Pressure from 7kg/cm^2 to 10kg/cm^2 will result in an increase in Specific volume.
10. Inverted Bucket Steam Trap operates on the principle of difference in temperature between Steam and Condensate.

Q.1(B): Define the following terms: [1x5=5]

1. pH and Conductivity.
2. Ash fusion temperature of coal.
3. Variable pressure operation in super critical boiler.
4. Specific Heat.
5. Steam pipe as per the Boiler Act-1923.

Q.1(C): Convert the following terms: [1x5=5]

1. Evaporation of 976kg of water/hr to..... Boiler HP.
2. 800 watts to ..... joules/sec.
3. 125*F to..... *C.
4. 167 mm of Hg to..... mm of Water Column.
5. 1 PPM to ..... mg/L.

Q.2(a): Discuss the steps involved in commissioning a new 100TPH water tube boiler. [4]
Q.2(b): Discuss about furnace safe guard supervisory system. [5]
Q.2(c): What are the common causes of boiler tube leakages and how can they be affectively prevented? [5]

Q.2(d): The coal fired Boiler data was measured at hourly intervals as given below: [6]

1. Quantity of steam generated	8TPH
2. Steam pressure	10kg/cm^2(g)
3. Steam temperature	180*C
4. Enthalpy of steam (dry saturated) at 10kg/cm^2(g)	665 Kcal/kg
5. Feed water temperature	85*C
6. Enthalpy of feed water	85 Kcal/kg
7. Quantity of coal consumed	1.6TPH
8. GCV of Coal	4000 Kcal/kg

Calculate the Boiler Efficiency and Evaporation ratio.

Q.3(a): Explain the working, advantages and limitations of Orsat Apparatus. [4]
Q.3(b): What are the precautions to be taken before starting the Fire in the Boiler? [5]
Q.3(c): Explain the importance and methods of Wet and Dry preservation of Boiler. [5]
Q.3(d): Boiler critical parameters, Fuel analysis and Flue gas analysis are given below: [6]

1. Boiler Capacity	20TPH
2. Steam Pressure	66 kg/cm^2
3. O_2 in flue gas	9%
4. Average flue gas temperature	180*C
5. Air ambient temperature	29.3*C
6. Mass of Dry flue gas	12.7 kg/kg of coal
7. GCV of coal	4291 Kcal/k
Fuel Analysis: Carbon=53.65%, Hydrogen=3.25%, Nitrogen=1.11%, Oxygen=8.68%, Sulphur=0.34%, Moisture=14.43% & Ash content=18.54%.	

Calculate:

1. Theoretical air required for complete combustion.
2. Calculate % of Excess air supplied and actual mass of air.
3. Calculate % Heat loss in Dry flue gas. (Assume C_p=0.24Kcal/kg*C.
4. % Heat loss due to H_2 in fuel. (Assume C_p=0.45Kcal/kg*C).
5. Boiler Efficiency by indirect method, assuming the total of other losses like losses due to moisture in fuel and air, losses due to partial conversion of C to CO and losses due to unburnt in fly ash and bottom ash and losses due to radiation are approximately about 4%.

Q.4(a): Explain LP and HP dosing system in Boilers. [4]
Q.4(b): Explain the procedure to start Bagasse fired water tube boilers from cold condition. [5]
Q.4(c): Discuss the steam blowing procedure in high pressure Boiler. [5]
Q.4(d): A boiler fitted with a forced draught has the following particulars: [6]

1. Mass of air required	18 kg/kg of fuel
2. Mass of fuel used	1400 kg/hr
3. Temperature of outside air	40*C
4. Temperature of chimney gas	170*C
5. Draught pressure	40 mm of water
6. Efficiency of fan	70%

Determine the power required to drive the fan in HP. If the boiler is equipped with induced draught fan instead of forced draught fan with same efficiency what will be the power required driving it?

Q.5(a): Explain Annual Shutdown of PF Boilers or Off-season Maintenance of Sugar Industry Boiler. [4]
Q.5(b): Describe types of Boiler furnaces used in Bagasse fired Boilers. [5]

Q.5(c): How HRSGs are different from conventional boilers? [5]

Q.5(d): Calculate the pressure drop in meters when pipe diameter is increased from 250mm to 350mm for the same flow for a length of 100meters, water velocity is 2m/s in the 250mm diameter pipe and friction factor is 0.005. [6]

Q.6: Write short notes on any FOUR. [4x5=20]

a) Flue gas desulphurization (FGD)-process and technology.
b) Energy Conservation opportunities in steam system.
c) Attemperator.
d) Bed slumping in AFBC boilers its causes and effects.
e) Flash steam recovery.

MAHARASTRA BOILER OPERATION ENGINEER EXAMINATION-2025
PAPER-3 (ENGINEERING DRAWING)

Time: 3.00 Hours **Max. Marks: 100**

Instructions to Candidates:

1. Attempt any **FIVE** questions.
2. All questions carry **equal** Marks.
3. Figures to the right indicate **full** marks.
4. Use suitable **Scale** where required.
5. Assume suitable **missing data**, if any.

Q.1(A): Draw a schematic sketch of float type steam trap. [5]

Q.1(B): Draw symbols of the following: [1x5=5]

1. Orifice	2. Globe Valve Hand Operated
3. Control Valve	4. Safety Valve
5. Non return Valve	

Q.1(C): Draw free hand proportionate sketch of the following: [2x5=10]

1. Short radius elbow	2. Eccentric reducer
3. Hanging support	4. Boiler tube to tube butt weld edge preparation
5. Pipe strainer for pipeline	

Q.2: Following figure shows a pictorial view of an object. Draw front view and top view of the object showing all dimensions: [20]

(The arrow indicates the direction from which to obtained front view).

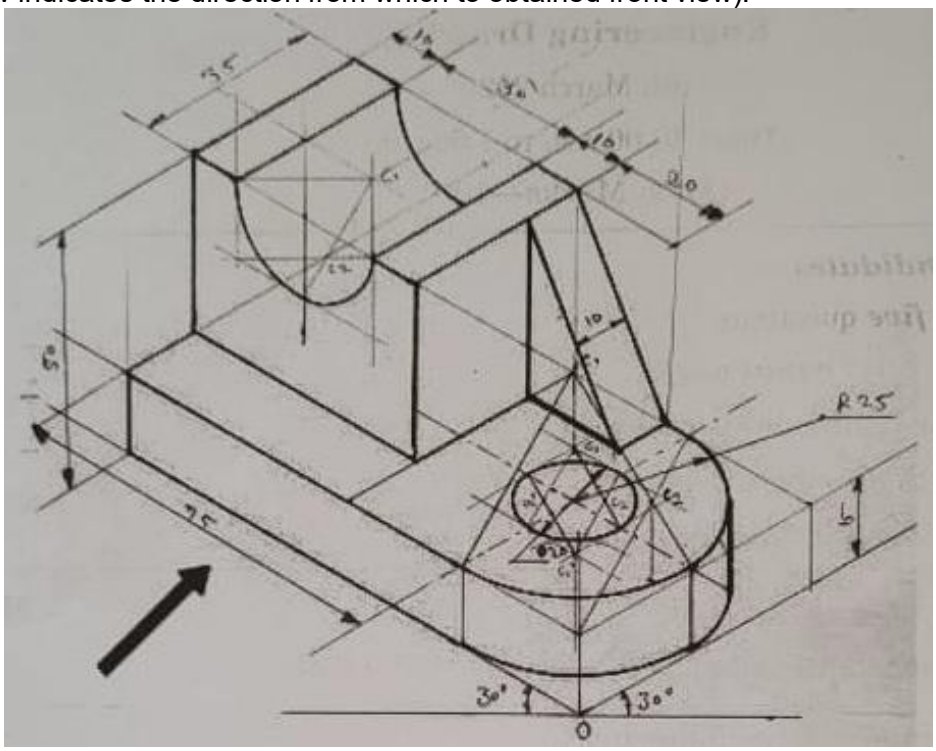

Q.3(A): Draw a schematic free hand sketch of the Boiler feed water pump components. [10]

1. Impeller	2. Casing Ring	3. Split Ring
4. Balancing Disc	5. Balancing Disc wear seat.	

OR

Draw the detailed diagram of Agro-waste fired, three pass, fully wet back smoke tube boiler.

Q.3(B): Draw a detailed diagram showing the Boiler tube expansion within the drum. [5]

Q.3(C): Draw a 200mm NB steam distribution header with five different size branches. [5]

Q.4: Three views of a bearing are shown in the following figure. Make an isometric drawing of bearing. Corner "A" should be the lowest point in your drawing. [20]

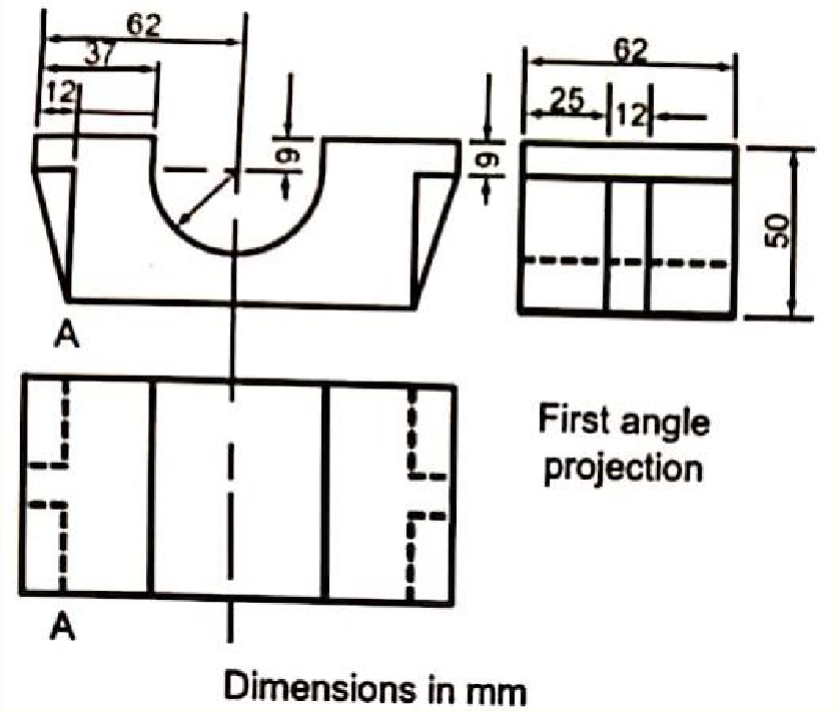

Q.5(A): Draw proportionate sketch of the following (any TWO). [2x5=10]

1. Mobray dual controls.
2. Fusible plug.
3. Relex type water level gauge.

Q.5(B): Draw "U" tube of water tube boiler with following dimensions. Tube size 76.2mm OD x 5mm thick, radius 75mm, leg length 300mm, also mention developed length and heating surface of the tube. [10]

Q.6(A): Draw a Rankine cycle for supercritical power plant. [5]

Q.6(B): Draw a proportionate schematic general arrangement of a deaerator, labelling all key components and including arrows for flow paths. [5]

Q.6(C): Based on your experience, choose ONE of the following and draw the corresponding drawing: [10]

(i) General arrangement drawing of a coal fired boiler system designed to handle a 500MW load. Including fuel handling, flue gas path, water path, steam path and auxiliary systems.

(ii) General arrangement drawing of a bagasse fired boiler system used in a sugar mill. Including fuel handling, flue gas path, water path, steam path and auxiliary systems.