Study Material For Boiler Operation Engineer (BOE) Exams

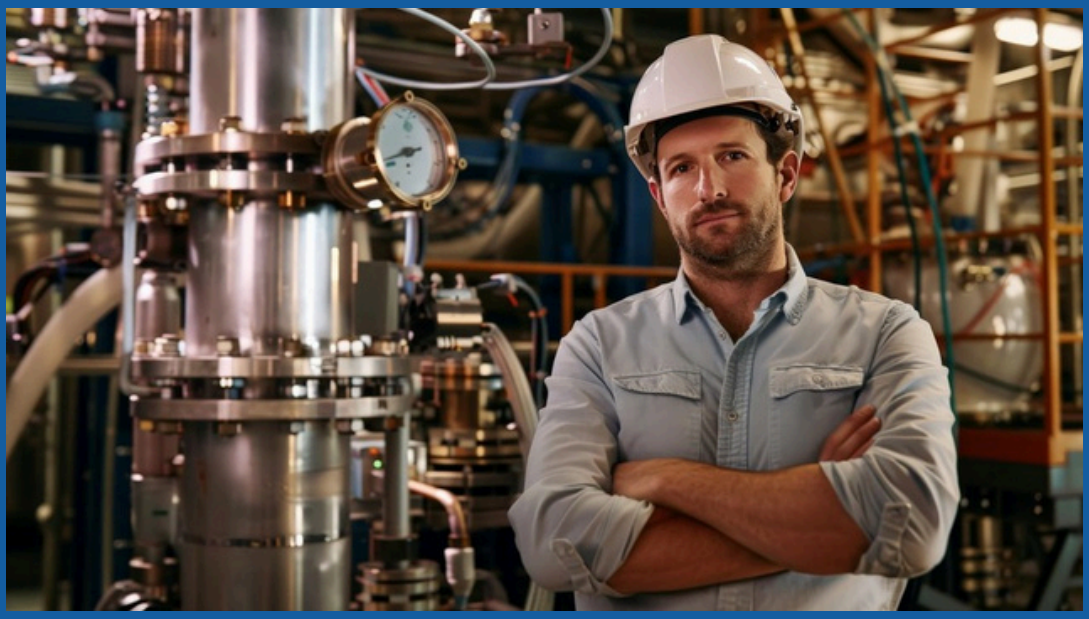

Theory, Numerical Problems, MCQs and Boiler Drawing Problems from BOE Exams

Amazon Flipkart Pothi

PROENGR.IN

SUDESH K JAIN

MAHARASTRA BOILER OPERATION ENGINEER EXAMINATION-2024
PAPER-1(BOILER ENGINEERING-1)

Time: 3.00 Hours **Max. Marks: 100**

Instructions to Candidates:

1. Attempt only FIVE questions.
2. Question No-1 is Compulsory.
3. All questions carry equal Marks.
4. Answer in brief and to the correct point will attract full marks.
5. Draw neat sketches wherever necessary for correct explanations.
6. Assume suitable data, if necessary.

Q.1(A): Choose the correct options and complete the following statements: [1x10=10]

1: The capacity of induced draft fan compared to forced draft fan in a boiler is…….

a) Same	b) More
c) Less	d) Depending upon size of boiler.

2: During hot Banking Boiler is kept in…

a) Depressurized condition	b) Pressurized condition
c) Firing condition	d) High air flow condition

3: Name the instrument used for measurement of specific gravity of liquid fuel.

a) Gravimeter	b) Bomb Calorimeter
c) Hydrometer	d) None of the Above

4: Buck stays are used to avoid…….

a) Buckling	b) Expansion
c) Firing	d) Over pressure

5: The Heat required to raise temperature of 1kg of water from 0*C up to boiling temperature is called as …….

a) Latent heat of evaporation	b) Sensible heat
c) Boiling point	d) Excess heat

6: In case of fuel oils, choose the correct answer from the following, which describes the relation between “specific heat” and “specific gravity”?

a) Lighter oil have higher specific heat	b) Heavier oil have lower specific heat
c) Lighter oil have lower specific heat	d) None of the above

7: Which one of the following fuels has the highest hydrogen content and lowest sulphur content?

a) Coal	b) Furnace Oil
c) Natural Gas	d) LSHS

8: Supercritical Technology is more sensitive to…….

a) Fuel quality	b) Power generated
c) Water chemistry	d) Environment

9: What is the typical value for excess air supplied in bagasse fired boiler?

a) 15-20	b) 15-50
c) 25-35	d) 25-50

10: The fusible plug, in small boilers is located at.

a) In the drum	b) In the fire tubes
c) Above steam drum	d) Over the combustion chnamber

Q.1(B): Explain the following terms in brief: [2x5=10]

(a) Define Steam Pipe as per The Boiler Act,1923.

(b) Define Evaporation ratio.

(c) Find out the excess air percentage supplied for a boiler if the theoretical CO_2 is 20.67% and the actual CO_2 measured in the flue gas is 14%.
(d) Explain term grindability index of coal.
(e) Explain the term carryover.

Q.2(a): What is the function of orifices in coal pipes of mills? [4]
Q.2(b): Explain the difference between Jet Condensers and Surface condensers. [5]
Q.2(c): How is re-heater temp is controlled in a typical utility boiler? [5]
Q.2(d):Calculate cooling water quantity required for a surface condenser in the following case: [6]

i.	**Quantity of steam flow: 55TPH**	**ii.**	**Condenser vacuum: -0.92kg/cm^2**
iii.	**Dryness fraction of steam: 85%**	**iv.**	**Condensate temperature: 48*C**
v.	**Cooling water inlet temperature: 31*C**	**vi.**	**Cooling water outlet temperature: 42*C**

Q.3(a): In a boiler operation, why is it crucial to regularly monitor and maintain proper water levels? What specific risks ar issues can arise if the water level is too high or too low? [4]
Q.3(b):Explain the difference between sub-critical and super-critical boilers. [5]
Q.3(c): Digital-based instrumentation and control systems are part of modern boilers. What are the advantages and gained with the use of these systems? [5]
Q.3(d):The performance of a boiler plant are as given below: [6]

A boiler generated 6.51 ton of steam per ton of coal fired.	**The boiler feed water temperature is 110*C downstream of deaerator.**
The steam generated is at 18kg/cm^2(g)	**Boiler Efficiency is 75%**
Factor of evaporation is 1.15	**C_p of the steam is 0.55kcal/kg*C**

Determine:
(i) The temperature of the steam and degree of superheat,(if any).
(ii) The equivalent evaporation per ton of coal burned.
(iii) The calorific value of coal.

Q.4(a): Define the term Cogeneration. List out important technical parameters to be considered in a Cogeneration system. [4]
Q.4(b): What are the principle heat losses that occur in the Boiler and list out the data required to calculate Boiler Efficiency using Indirect method and Direct method. [5]
Q.4(c): What are the methods to improve Efficiency of Bagasse fired Water Tube Boiler? [5]
Q.4(d): Find the volume of 1kg of steam at pressure of 14kg/cm^2(g) in each of the following case: [6]
(i) When steam is dry saturated?
(ii) When steam is wet having dryness fraction 0.9?
(iii) When steam is superheated, the degree of superheat being 40*C?

Q.5(a): Explain the important of magnetite layer in Boiler and how it is formed in Boiler. [4]
Q.5(b): Explain the effects of Impurities in water on Boiler Components. [5]
Q.5(c): Differentiate short term and long-term overheating of boiler pressure part tubes? [5]
Q.5(d): The following are the data collected for typical oil fired Boiler. Find out the efficiency of the Boiler by indirect method and Boiler Evaporation ratio. [6]

i.	**Types of Boiler: Oil fired**	**ii.**	**GCV of oil: 10200 kCal/kg**
iii.	**Ultimate analysis of oil: C=84%,**	**iv.**	**Steam generated pressure: 7kg/cm^2(g)**

	H_2=12%, S=3%, O_2=1%		**saturated**
v.	**Enthalpy of steam: 660kcal/kg**	**vi.**	**Feed water temperature: 60*C**
vii.	**% of oxygen in flue gas: 7**	**viii.**	**% of CO_2 in flue gas: 11%**
ix.	**Flue gas temperature(T_f): 220*C**	**x.**	**Ambient temperature(T_a): 27*C**
xi.	**Humidity of air: 0.018kg/kg of dry air.**		

Q.6: Write Short Note (Any FOUR): [4x5=20]

a) Three elements drum level control.	**b) Boiler Drum and its Internals.**
c) Boiler preservation methods.	**d) Causes of Boiler Tube Leakages.**
e) Boiler Steam Test.	**f) Off season maintenance of bagasses fired boiler in Sugar Factory.**

MAHARASTRA BOILER OPERATION ENGINEER EXAMINATION-2024
PAPER-2(BOILER ENGINEERING-2)

Time: 3.00 Hours **Max. Marks: 100**

Instructions to Candidates:

1. Attempt only FIVE questions.
2. **Question No-1** is Compulsory.
3. All questions carry equal Marks.
4. Answer in brief and to the correct point will attract full marks.
5. Draw neat sketches wherever necessary for correct explanations.
6. Assume suitable data, if necessary.

Q.1(A): State whether the following statements are TRUE or FALSE and write the correct sentence: [1x10=10]

1: In a demineralization plant, the cation exchanger resin is in the hydroxyl form and anion exchanger resin is in the hydrogen form.

2. Secondary air in a pulverized fuel boiler is used to carry pulverized coal to the burners.

3. Increase of steam pressure results in steam temperature going up and enthalpy of evaporation going up.

4. Set pressure of Super-heater Safety valve is kept higher than Drum Safety Valve.

5. If steam and water can coexist at 1.033Kg/cm^2 and 100*C, at this condition, steam is called saturated vapour and water is called saturated liquid.

6. Inverted bucket steam traps operate on the principle of difference in temperature between steam and condensate.

7. Suspension burning as well as Grate burning takes place in the spreader stoker Boiler.

8. Any branch connection welding can be waived against 100% radiograph by the Boiler Inspector during repairing.

9. ASTM-106 Gr.II is the Specification of Material used for Boiler tubes manufacturing.

10. Boiler water pH is always more than Feed water pH.

Q.1(B): Define the following terms in one or two sentences: [1x5=5]

1. Turn-down Ratio.
2. Conductivity of Boiler Feed water.
3. Circulation Ratio.
4. Boiler as per the Boiler Act-1923.
5. Degree of Superheat.

Q.1(C): Convert following units as directed: [1x5=5]

1. 167 mm of Hg into mm of water column.
2. 500 Btu/lb into Kcal/Kg.
3. 1 Kwh into Kcal.
4. Convert 2300 Kcal into KJ.
5. 905 Watt into Joule/sec.

Q.2(a): Explain the terminology used for Safety Valve: [4]

1. Set Pressure	2. Blow-down	3. Chattering

Q.2(b): Explain the stages of Inspection for registration of new Boiler as per Indian Boiler Regulations. [5]

Q.2(c): Explain the importance of RLA study, RLA methodology and approach. [5]

Q.2(d):Efficiency of 300TPH coal fired boiler is 84%. Calculate quantity of coal required per day. Feed water temperature is 140*C, GCV of coal 3600kcal/Kg. The enthalpy of superheated steam is 803 kcal/kg. [6]

Q.3(a): What automatic action is taken by safety interlocks in the following cases: [4]

1. Drum level very high.	2. Furnace pressure very high.
3. Deaerator level very high.	4. Superheated steam temp high.

Q.3(b):Explain heat transfer by Conduction, Convection and Radiation as applied to various parts of water tube high pressure Boilers. [5]

Q.3(c): Which factors are responsible for Super-heater fouling? [5]

Q.3(d):Calculate power required to drive a forced draft fan which maintains a draft of 80 mm of water. Under the following conditions: [6]

i.	Temperature of air in boiler house : 22*C
ii.	Density of air at NTP : 1.29 kg/m^3
iii.	Air supplied per kg of coal: 18kg
iv.	Mass of fuel burnt: 2kg/sec.
v.	Efficiency of fan: 80%

Q.4(a): What is the principle of CFBC Boiler? [4]

Q.4(b): What are the causes of Boiler accidents and precautions to be taken to avoid accidents? [5]

Q.4(c): Elaborate procedure of Cold Start-up of 10TPH, Agro waste fired Composite Boiler. [5]

Q.4(d): Calculate height of Chimney to produce a draught of 16 mm of water column when temperature of flue gases in Chimney is 317*C. The Mean temperature of outside air is 38*C and quantity of air supplied is 18Kg/Kg of fuel. [6]

Q.5(a): State principle of thermodynamic steam trap. [4]

Q.5(b):Explain the advantages of Fluidized Bed Combustion (FBC) Boilers over conventional coal fired Boilers. [5]

Q.5(c): What is importance of Thermal Insulation and Name any four insulating materials. [5]

Q.5(d):Estimate the pipe size required to carry dry saturated steam at 65Kg/cm^2(g) Pressure from Boiler giving steam flow rate 68750Kg/Hr. Assume Steam Velocity 38m/sec. [6]

Q.6: Write short notes on any FOUR. [4x5=20]

a) Equivalent Evaporation.
b) Types of Pollution control Equipments and its necessity.
c) Different types of welding defects.
d) Spreader stoker furnace.
e) Chemical Cleaning of Boiler.

MAHARASTRA BOILER OPERATION ENGINEER EXAMINATION-2024
PAPER-3 (ENGINEERING DRAWING)

Time: 3.00 Hours **Max. Marks: 100**

Instructions to Candidates:

1. Attempt any FIVE questions.
2. All questions carry equal Marks.
3. Figures to the right indicate full marks.
4. Use suitable Scale where required.
5. Assume suitable missing data, if any.

Q.1(A): Draw a schematic sketch of a fusible plug. **[5]**

Q.1(B): Create proportionate free hand sketches of the following: **[2x5=10]**

i.	**Slip on raised face flange.**	**ii.**	**Steam pipe support.**
iii.	**Long radius elbow.**	**iv.**	**Concentric reducer.**
v.	**Socket weld elbow.**		

Q.1(C): Draw process instrumentation symbols of following valves: **[5]**

1. Gate Valve	**2. Globe Valve**	**3. Check Valve**
4. Control Valve	**5. Safety Valve**	

Q.2: Figure No-1 shows a pictorial view of an object. Draw the following views. The arrow indicates the direction to obtain a view from the front. **[20]**

i.	**Sectional front view.**	**ii.**	**Top view.**
iii.	**Side view from the left.**	**iv.**	**Indicate all essential dimensions.**

Fig. No. 1

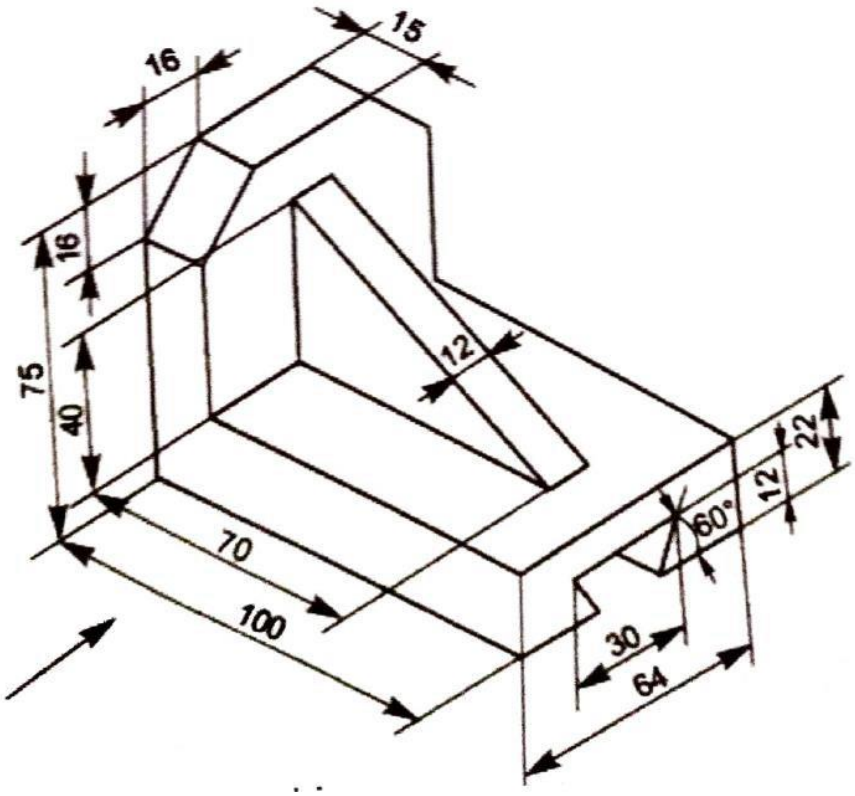

Q.3(A): Name and draw any FIVE types of welding joints. [10]
Q.3(B): Draw Proportionate free hand sketches of following (any TWO). [10]

1. Cyclone Dust Collector. 2. Swing Type Non return Valve.
3. Boiler Feed Water Pump.

Q.4(A): Construct an isometric scale and use it to make a true isometric view of the casting shown in the Figure No-2. [10]

Fig. No. 2

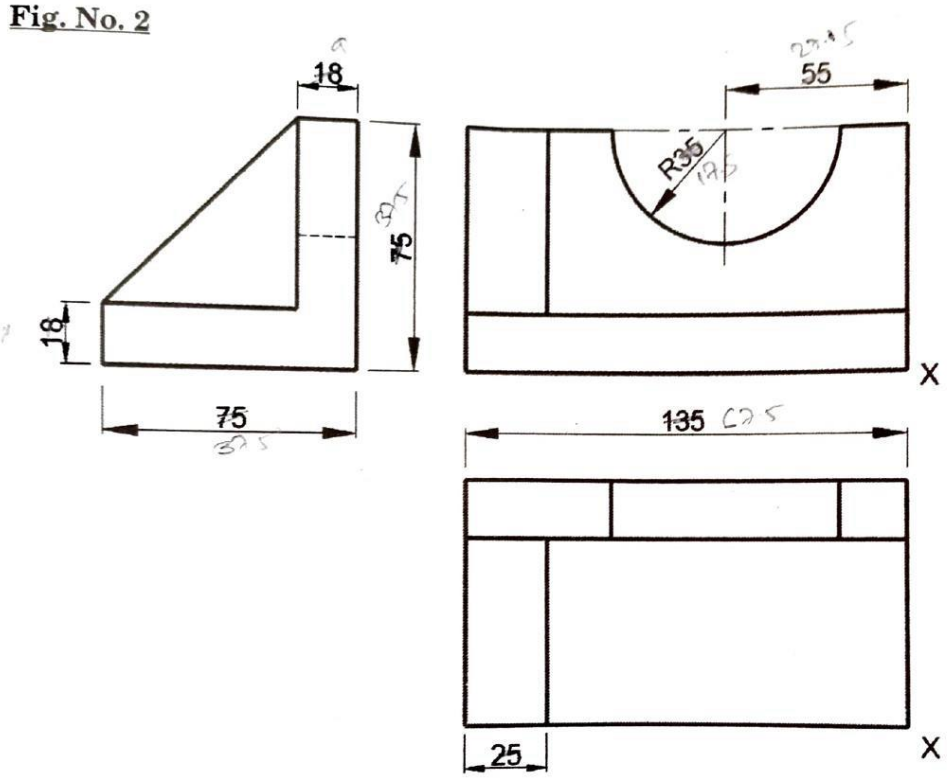

Q.4(B): Draw with dimensions as mentioned here with for 2:1 Ellipsoidal dished end for steam drum. Take a scale of 1:20. [10]
SF: 100mm, Thickness(t): 20mm, OD: 4000mm, Knuckle radius(KR): 0.17xID, Crown Radius(CR): 0.9xID, Disc height: ID/4, Total height=SF+Disc height+t.

Q.5(A): Draw proportionate sketch of a steam stop valve and name the parts. [5]
Q.5(B): Draw proportionate sketch of bag filter dust collection system. [5]
Q.5(C): Draw a proportionate free hand sketch of drum internals assembly and name the parts. [5]
Q.5(D): Draw proportionate sketch of plain tube economizer with inlet/outlet headers and name the parts. [5]

Q.6(A): Draw typical schematic general arrangement of coal or bagasses based steam power plant. Indicate all the essential parts. [10]

Q.6(B): Draw the P&I Diagram of water treatment plant for high pressure boilers from pre-treatment to DM Water. [5]
Q.6(C): Draw neat and proportionate sketch of any ONE of the following: [5]
1. Bourdon type Pressure Gauge. 2. Spring Loaded Safety Valve.
3. Inverted Bucket type Steam Trap.