Study Material For Boiler Operation Engineer (BOE) Exams

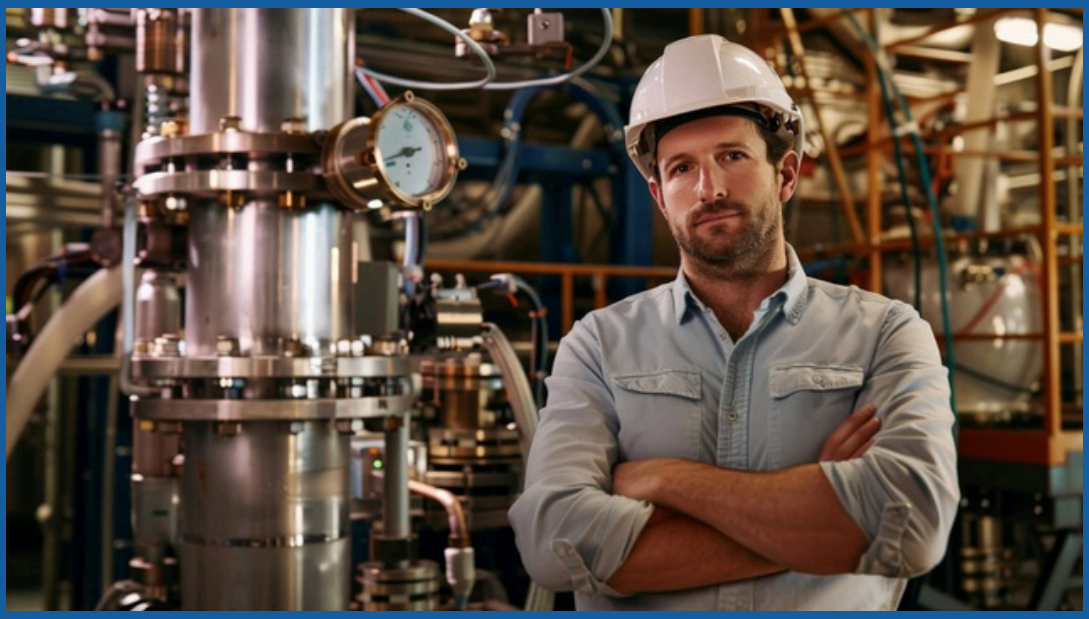

Theory, Numerical Problems, MCQs and Boiler Drawing Problems from BOE Exams

Amazon Flipkart Pothi

PROENGR.IN

SUDESH K JAIN

DIRECTORATE OF STEAM BOILERS

(MAHARASHTRA STATE)

Examination for certificate of proficiency as a Boiler Operation Engineer

(Under Boiler Operation Rules, 2021)

Boiler Technology - I

25th February 2023

(TIME : 10-00 A.M. TO 1-00 P.M.)

(Max. Marks—100)

Instructions to Candidates:—

(1) Attempt any *five* questions.

(2) Question No. 1 is *Compulsory*.

(3) Draw neat sketches wherever *necessary* for correct explanations.

(4) Answer in brief and to the correct point will attract full *Marks*.

(5) All questions carries equal *Marks*.

(6) Figures to the right indicate *Marks*.

Marks

1. (A) Choose the correct options and complete the following statements :— 10

(*a*) For Boiler water treatment chemical dozing with small discharge at high pressure, pump preferred is .....

(*i*) Centrifugal

(*ii*) Axial flow

(*iii*) Propeller

(*iv*) Reciprocating.

(*b*) High percentage of Carbon Mono-oxide presence in the flue gas of the Boiler is an indication of .....

(*i*) Complete combustion

(*ii*) Good control of Pollutants

(*iii*) Low Excess Air

(*iv*) High Excess Air.

(*c*) In a Boiler, the biggest heat loss is due to .....

(*i*) Moisture in fuel

(*ii*) Dry flue gases

(*iii*) Radiation and Convection

(*iv*) Unburnt Carbon.

(*d*) The Latent heat of vaporization at critical point is .....

(*i*) Less than zero

(*ii*) Greater than zero

(*iii*) Equal to zero

(*iv*) None of the above.

(e) A bimetallic strip is used in which of following traps.

(i) Inverted Bucket

(ii) Thermostatic

(iii) Float type

(iv) Thermodynamic.

(f) The difference between Mean solid velocity and Gas velocity in FBC Boiler is called .....

(i) Settling velocity

(ii) Fluidisation velocity

(iii) Slip velocity

(iv) None of the above.

(g) Steam at 6Kg/cm^2 (ab) has a sensible heat of 159 Kcal/Kg and latent heat is 498.5 Kcal/Kg. If the steam is 95% dry then the total Enthalpy is .....

(i) 625 Kcal/Kg

(ii) 650 Kcal/Kg

(iii) 553 Kcal/Kg

(iv) 633 Kcal/Kg.

(h) The operating Excess air percentage is high in .....

(i) Spreader stoker coal fired boiler

(ii) Oil fired boiler

(iii) Bagasse fired boiler

(iv) Wood fired boiler.

(i) If Excess Air is 15.38 % in FO fired Boiler, the % O_2 in flue gases is .....

(i) 4.2%

(ii) 2.8%

(iii) 1.4%

(iv) 3.6%.

(j) Attemperation is done to .....

(i) Control of steam pressure

(ii) Control of Steam temp

(iii) Control of feed water silica

(iv) None of the above.

(B) Explain the following terms in brief :— 10

(i) 3 T's applied for complete combustion

(ii) Natural and Forced circulation of Boiler

(iii) Foaming and Priming

(iv) Critical pressure and Dryness fraction

(v) Vacuum Efficiency of Condenser.

Marks

2. (*a*) What are the comparative advantages and disadvantages of fire tube and water tube Boilers ? 4

(*b*) What are the classifications of pulverized coal burners and oil burners. 5

(*c*) Explain 3 element Drum Level Control. 5

(*d*) A Boiler with an output of 80 Kg/sec of Steam at pressure 100 Kg/ cm^2 (g) and 500°C temp has an Efficiency of 85% and it operates at full load. Feed water enters the Boiler at 160°C. Given - CV of Coal - 4600 Kcal/Kg, Sulphur content = 0.35%, Ash content = 40%, Efficiency of ESP =99.5%. 6

Calculate.—

(*i*) The SO_2 Emission through stack in Kg/Hr

(*ii*) Particulate Emission through stack in Kg/Hr.

3. (*a*) What are the factors to be considered for proper selection of water treatment plant ? 4

(*b*) What are the merits and demerits of Artificial draught over Natural draught ? 5

(*c*) What do you understand by the terms Boiler mounting and accessories ? Name important mountings and accessories. 5

(*d*) A 5000 Kg/Hr Boiler operates at 10.5 Kg/cm^2 (g) and has maximum allowable TDS of 3500 ppm. Calculate Blowdown rate in Kg/Hr. 6

If the same Boiler is operated with manual blowdown and assuming that Boiler water TDS is maintained at 2500 ppm. Assume Boiler feedwater TDS is 300 ppm and feedwater temp is 300°C.

Calculate Energy loss due to Excess blowdown.

4. (*a*) List out various factors which improves Boiler Performance. 4

(*b*) List out the Energy conservation opportunities in Boiler system. 5

(*c*) Explain Mechanical Deaeration and Chemical Deaeration. 5

(*d*) The following data was obtained during a test on two boilers working under similar conditions, except that the draught in first boiler was produced by an induced draught fan and in second by a forced draught fan :— 6

*Air supplied /Kg of fuel =19 Kg

*Density of air =1.205 Kg /m^3

*Density of flue gas at specified temperature =0.769 Kg /m^3

*Combustion rate =150 Kg of fuel/hr, Draught produced =75 mmwc

*Efficiency of fan in both cases =50 %

*Calculate BHP of fan in each case.

Marks

5. (*a*) What are the factors involved in selecting Thermal Insulation material ? 4

(*b*) What are the various methods available to control the excess air in a Boiler ? 5

(*c*) What are the different methods to control Superheat temp of Steam ? 5

(*d*) Steam with a Dryness fraction of 0.9 at 8 Kg/cm^2 (ab) passes through a reducing valve to a pressure of 3 Kg/cm^2 (ab). What is the Dryness fraction at downstream of valve ? 6

6. Write short notes on (any *four*) :— 20

(*a*) Factors to be taken into account in the design consideration of Boiler.

(*b*) Principle of flue gas analysis by Orsat.

(*c*) Sources and Effects of Air leakages in Steam condenser.

(*d*) Steps involved in Boiler tube replacement after failure.

(*e*) Wet mode operation of Supercritical Boiler.

DIRECTORATE OF STEAM BOILERS

(MAHARASHTRA STATE)

Examination for certificate of proficiency as a Boiler Operation Engineer

(Under Boiler Operation Rules, 2021)

Boiler Technology - II

25th February 2023

(TIME : 2-30 P.M. TO 5-30 P.M.)

(Max. Marks—100)

Instructions to Candidates:—

(1) Attempt any *Five* questions.

(2) Question No. 1 is *compulsory*.

(3) Answer each next main question on a new page.

(4) Answer in brief and to the point attract more *marks*.

(5) Assume suitable data, if necessary.

Marks

1. (A) True or False :— 10

(*i*) The major axis of elliptical manholes on the shell should be provided circumferentially.

(*ii*) Difference between GCV and NCV will be smaller in Natural Gas compared to Coal.

(*iii*) In a recuperative air preheater, the heat is transferred by direct mixing.

(*iv*) A rise in the conductivity of Boiler feed water indicates increase level of dissolve solids.

(*v*) The low combustion temperature in FBC boilers results in minimal formation of NOx.

(*vi*) The pressure of reheat steam after passing through reheater compared to inlet condition is less.

(*vii*) The function of injector used in small capacity boilers is to inject chemical solution in feed pump.

(*viii*) In locomotive boilers, the draught in furnace is increased by utilizing exhaust steam from engine.

(*ix*) Once through Boiler can operate at subcritical as well as supercritical pressures.

(*x*) The temperature of flue gases at air heater outlet should be above dew point temperature of flue gases.

(B) Give Definition of the following :— 5

(*i*) Dew Point

(*ii*) Attemperator

(*iii*) Boiler mountings

(*iv*) Turndown ratio

Marks

(C) Convert the Units as mentioned :— 5

(*i*) 1 Gallon = ... Litres.

(*ii*) 990 °F = ... °C.

(*iii*) 2 Sq. Inch = ... Sq. mm.

(*iv*) 1 KG = ... Pound.

(*v*) 1 ATA = ... Bar.

2. (*a*) Write note on handling of HFO/LSHS. 4

(*b*) What is the Bed slumping in FBC boiler and what care should be taken for slumped compartment? 5

(*c*) Explain why dry saturated steam is preferred over wet or super heated steam for process. Describe various precaution/measures one must take to supply saturated steam. 5

(*d*) 200 TPH steam is generated in a Boiler at 100 kg/cm^2 pressure and 500°C temperature. If feed water inlet temperature is 135°C and 52 Tons of coal is consumed per Hour then calculate :— 6

(*i*) Equivalent evaporation from and at 100°C.

(*ii*) Equivalent evaporation from and at 100°C per Ton of coal.

(*iii*) Boiler HP.

3. (*a*) Classify the various types of insulation as per temperature and give an example for each type. 4

(*b*) What is draft? Explain different types of drafts. 5

(*c*) Describe various causes of Boiler Tube Failures. 5

(*d*) The insulation of a steam pipeline is to be upgraded. With the following data. Calculate the simple payback period for the insulation upgradation project :— 6

Length of the steam pipeline	100 m
Bare pipe external diameter	100 mm
Heat loss from the pipe with existing 25 mm insulation thickness.	2000 kcal/m^2/hr
Thickness of insulation to be added	25 mm
Heat loss after insulation upgradation	400 Kcal/m^2/hr
Boiler efficiency	75%
GCV of coal	4000 kcal/kg
Annual operating hours	8000 hrs
Cost of coal	Rs. 2000/Ton
Investment for insulation upgradation	Rs. 4 Lakhs

4. (a) Various ways to improve efficiency of bagasse fired boiler. 4

(b) Enumerate reasons for incomplete combustions of solid, liquid and gaseous fuels. 5

(c) List out different temperatures to be measured during the boiler (steam generation) audit. 5

(d) What quantity of heat is required to raise the temperature of 450 grams of water from 15°C to 85°C ? The specific heat capacity of water is 4.18 J/g/°C. 6

5. (a) Explain the difference between excess air and excess oxygen 4

(b) Describe spring loaded Safety valve setting procedure with neat diagram. 5

(c) Explain Chain grate or Traveling grate Stoker Boiler with neat sketch. 5

(d) A 500 MW coal plant based on conventional pulverized fuel has a gross efficiency of 38%. The Gross calorific value of the coal used is 4000 kCal/kg with 40% total carbon. A supercritical unit of 500 MW replaces the plant with a gross efficiency of 40% using the same characteristic coal. Calculate the following :— 6

(i) Specific coal consumption after replacement.

(ii) Amount of coal and carbon dioxide saved during a year if the plant works for 8000 hours.

6. Write short note on following :— 20

(a) Steam blowing

(b) Chemical cleaning of pressure part

(c) Hot Banking of Boiler

(d) Automatic Blowdown System.

(MAHARASHTRA STATE)

Examination for certificate of proficiency as a Boiler Operation Engineer

(Under the Boiler Operation Rules, 2021)

Engineering Drawing

26th February 2023

(TIME : 10-00 A.M. TO 1-00 P.M.)

(Max. Marks—100)

Instructions to Candidates.—

(1) Attempt any *Five* questions.

(2) All questions carries equal *Marks*.

(3) Figures to the right indicate full *Marks*.

(4) Assume suitably missing data if any.

Marks

1. (*a*) Draw a schematic drawing of a demineralizer plant. Indicate the part names. 5

(*b*) Draw the schematic free-hand sketches of the following :— 10

(*i*) Welding neck raised face flange

(*ii*) Steam pipe supports (any *two* types)

(*iii*) Gag screw to position on a safety valve

(*iv*) Boiler water sample cooler. Name the parts

(*v*) Hexagonal-headed nut and bolt.

(*c*) Draw a neat and proportionate sketch of reflex type boiler water level gauge glass assembly. Name the internal parts. 5

2. Figure No. 1 is showing a pictorial view of an object. Draw the following views :—

(*i*) Sectional front view, section PQ 5

(*ii*) Top view 5

(*iii*) Side view from the left 5

(*iv*) Indicate all essential dimensions. 5

The arrow indicates the direction to obtain a view from the front.

3. (*a*) Draw a neat and proportionate free-hand sketch of a spring-loaded safety valve and name the internal parts. 10

(*b*) Draw schematic proportionate free hand sketch of the following :— 10

(*i*) Boiler feed water pump impeller

(*ii*) Boiler feed water pump casing ring

(*iii*) Steam pipeline expansion loop (any *two* types)

(*iv*) Equal Tee-socket weld

(*v*) Elementary welding symbols of Fillet weld and Single-V butt weld.

Marks

4. (*a*) Fig. No. 2 is showing two views of a plain shaft bearing housing. Make a full-size isometric drawing of the bearing housing. Corner 'A' should be the lowest point in your drawing. 10

(*b*) Draw a neat and proportionate free-hand sketch of stop valve and indicate all the parts. 10

5. (*a*) Draw typical arrangement showing steam safety valve discharge piping set up. 5

(*b*) Draw proportionate sketch of a resistance temperature detector (RTD) and thermowell. 5

(*c*) Draw proportionate free-hand sketch of drum internal assembly and name the parts. 5

(*d*) Draw proportionate free-hand sketch of bag-filter dust collection system. 5

6. (*a*) Draw GA drawing of a typical pressure-reducing valve station. Name all the parts. 5

(*b*) Draw GA drawing of furnace membrane waterwall tie-bar and backstay arrangement. 5

(*c*) Draw P&ID for fuel supply systems and safety controls for gas or oil burner. Indicate all parts, controls, and interlocks with standard legends and symbols. 10

OR

Draw typical schematic general arrangement of coal or bagasse-based steam power plant. Indicate all the essential parts.

Fig. No. 1

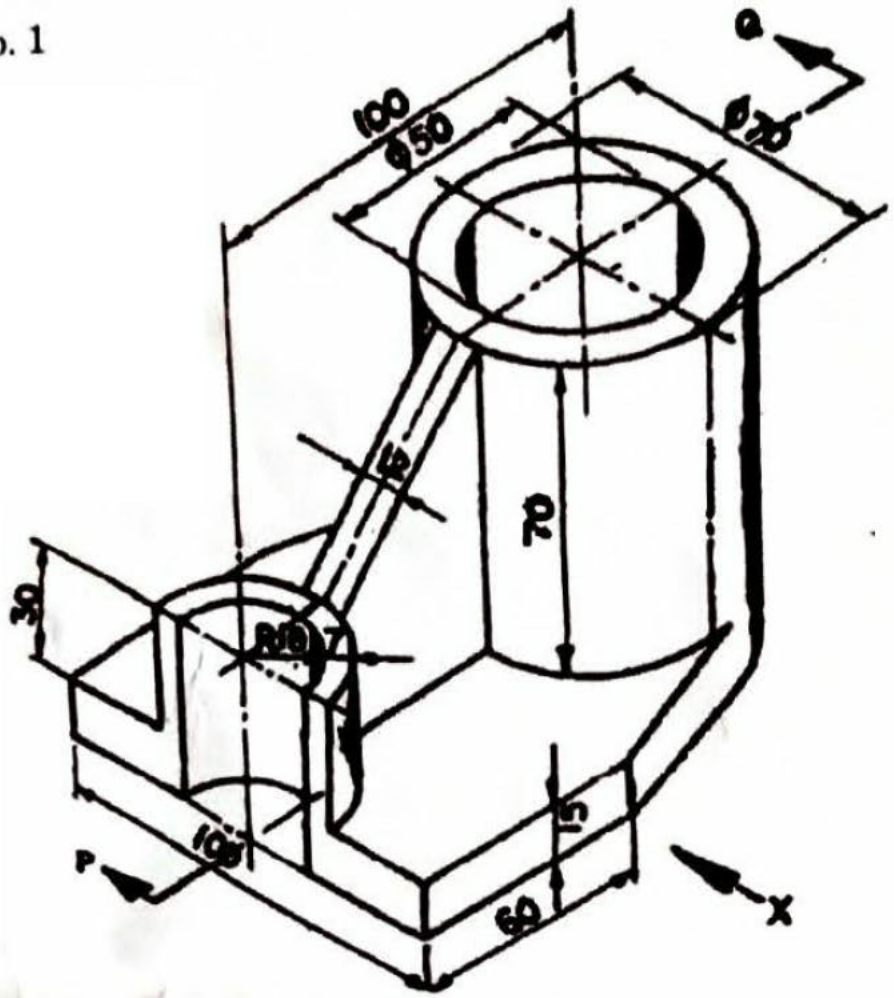

Fig. No. 2

