Study Material For Boiler Operation Engineer (BOE) Exams

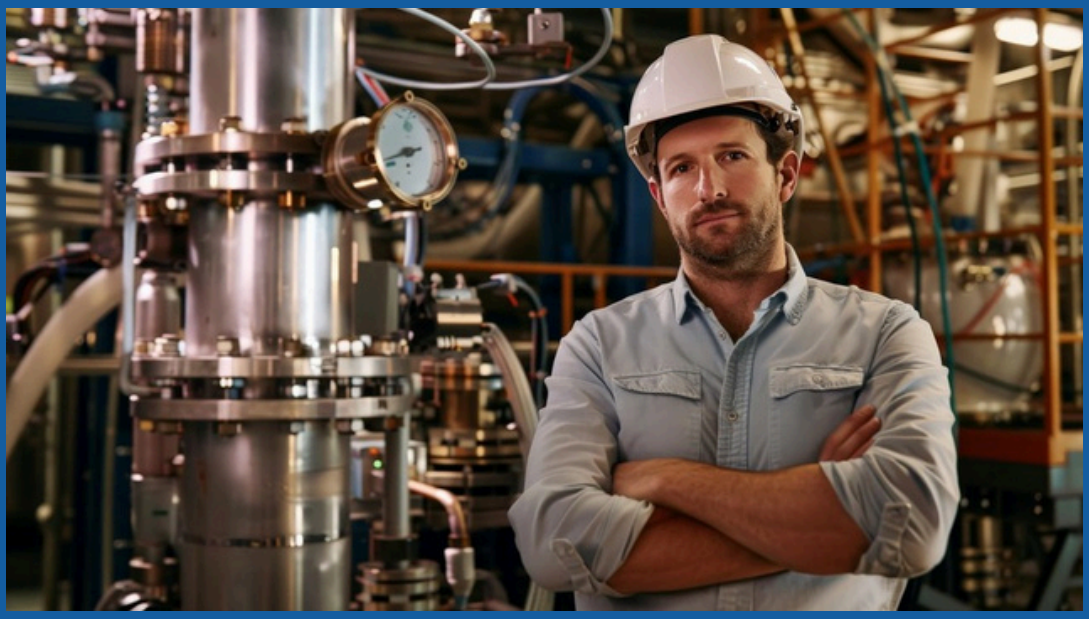

Theory, Numerical Problems, MCQs and Boiler Drawing Problems from BOE Exams

Amazon Flipkart Pothi

PROENGR.IN

SUDESH K JAIN

CON 1440

EXAMINATION BOARD OF BOILERS

(MAHARASHTRA STATE)

(Under the Boiler Operation Engineer's Rules, 2011)

Boiler Technology—I

30th January 2016

[TIME : 10-00 A.M. TO 1-00 P.M.]

(MAX. MARKS—100)

Instructions to candidates.—(1) Attempt any *five* questions.

(2) Question No. 1 is *compulsory.*

(3) All answers of one question should be at one place.

(4) Answer in brief and to the point attract more marks.

(5) Assume suitable data, if necessary.

Marks

1. (A) Out of the given options select most appropriate option as an answer :— 10

(*a*) The latent heat of the steam at atmospheric pressure is .....

(*i*) 1875KJ/kg

(*ii*) 2257kJ/kg

(*iii*) 860kJ/kg

(*iv*) 539KJ/Kg

(*b*) In case of industrial process heating, best quality of steam is .....

(*i*) high pressure steam

(*ii*) super-heated steam

(*iii*) wet steam

(*iv*) dry saturated steam

(*c*) The material used to control SOx in the FBC boiler is .....

(*i*) limestone

(*ii*) silica

(*iii*) alumina

(*iv*) lime

(*d*) Which of these fuels has the highest heating value ?

(*i*) methane

(*ii*) hydrogen

(*iii*) diesel

(*iv*) LPG

(*e*) To regulate and control the flow ..... type of valves are normally used.

(*i*) ball valves

(*ii*) gate valves

(*iii*) globe valves

(*iv*) swing check valves

[*Turn over*

Marks

(*f*) A boiler is generating saturated steam of 2 tones/hr. at a pressure of 7.0 kg/cm^2 (g). The feed water temperature is 80°C and furnace oil consumption is 140 kg/h. What is the efficiency of the boiler by using direct method? (calorific value of FO is 10,000 kCal/kg, enthalpy of steam is 660Kcal/kg).

(*i*) 78%

(*ii*) 80%

(*iii*) 82%

(*iv*) 84%

(*g*) At the critical point, specific volume of water is equal to .....

(*i*) Zero

(*ii*) 0.00634 m^3/kg

(*iii*) 0.00317 m^3/kg

(*iv*) None of the above

(*h*) Discharge pressure of a centrifugal BFW pump depends upon .....

(*i*) pump speed

(*ii*) diameter of impellers

(*iii*) number of impellers

(*iv*) all the above

(*i*) Proper sizing of steam pipeline helps in minimizing .....

(*i*) steam requirement

(*ii*) pressure drop

(*iii*) temperature drop

(*iv*) boiler efficiency

(*j*) The entropy of water at 0°C is .....

(*i*) 0

(*ii*) 1

(*iii*) 4.3

(*iv*) 2.3.

(B) Answer following questions in short :— 10

(*i*) What is the common form of boiler manhole opening? Why?

(*ii*) What are the reasons of water hardness?

(*iii*) State two causes for rise in exit flue gas temperature of a boiler.

(*iv*) How many liters of water at 90°C should be poured in to a tub containing 120 Liters of water at 25°C to get final temperature of mixture at 40°C?

(*v*) A carbon steel pipe has outside diameter of 273 mm and wall thickness 15 mm. Find the weight of 6 meter long pipe in kg.

2. (*a*) Write advantages and disadvantages of estimation of boiler efficiency by direct method. 4

(*b*) What is objective of boiler water phosphate treatment? When trisodium phosphate is dissolved in boiler water what principal reaction take place? 5

Marks

(c) Define the terms :— 5

(i) Sensible heat

(ii) Latent heat

(iii) Critical pressure

(iv) Dryness fraction

(v) Safe working strength of material.

(d) Calculate enthalpy, specific volume and density of steam at pressure of 40kg/cm^2 absolute and dryness fraction of 0.9. 6

3. (a) What are the advantages of artificial draught ? How boiler furnace draught can be controlled ? 4

(b) What conditions must be fulfilled for effective operation of the deaerator ? 5

(c) In which cases boiler must be shut down immediately ? 5

(d) The percentage composition by mass of coal sample analysis is given as: C- 90, H_2- 3.3, N_2- 0.8, S- 0.9, O_2- 3 and ash- 2. 6

Calculate.—

(i) The minimum mass of air required for complete combustion of 1kg of coal.

(ii) If 50% excess air is supplied, find the mass of dry flue gases per kg of coal.

4. (a) Differentiate between sub-critical and super critical boilers. 4

(b) Explain heat transfer by conduction, convection and radiation as applied to various parts of a water tube high pressure boiler. 5

(c) Explain the terminology used for "safety valve" - Set pressure, blowdown and chattering. 5

(d) For combustion of 600 lit/hour of furnace oil, estimate combustion air quantity required in kg/hour with 20% excess air. Specific gravity of furnace oil 0.9. (Fuel analysis: C - 84%, H -12%, S - 3%, O-1%). 6

5. (a) What is the difference between foaming and priming ? What are its causes ? 4

(b) What factors contribute to overheating of radiant super-heater ? How overheating can be avoided ? 5

(c) Describe various types of steam condensers. What are various causes for poor performance of condensers and what are the remedies for improvement in performance ? 5

(d) Following are the particulars refer to a steam plant consisting of boiler, economizer and a super heater :— 6

* Steam pressure = 14 bar absolute
* Mass of steam generated = 5000 kg/hr.
* Mass of coal used = 675 kg/hr.
* Calorific value of coal = 29800 kJ/kg
* Temperature of feed water entering the economizer = 30°C
* Temperature of feed water leaving the economizer = 130°C
* Dryness fraction of steam leaving the boiler drum = 0.97
* Temperature of steam leaving the super heater = 320°C

[Turn over

Marks

Determine.—

(*i*) Overall efficiency of the plant.

(*ii*) The percentage of available heat utilized in the boiler, economizer and super heater respectively.

6. Write short notes on (any *four*) :— 20

(*i*) Boiler log book importance and its contents.

(*ii*) Sugar test to boiler water.

(*iii*) Fuel storage, hazards involved and preventive measures (any one fuel - bagasse / coal / LSHS).

(*iv*) Balanced draught system.

(*v*) Membrane type water wall.

CON 1441

EXAMINATION BOARD OF BOILERS

(MAHARASHTRA STATE)

(Under the Boiler Operation Engineer's Rule, 2011)

Boiler Technology—II

30th January 2016

(TIME : 2-30 P.M. to 5-30 P.M.)

(MAX. MARKS : 100)

Instructions to candidates.—(1) Attempt any *five* questions.

(2) Question No. 1 is *compulsory.*

(3) All answers of one question should be at one place.

(4) Answer in brief and to the point attract more marks.

(5) Assume suitable data, if necessary.

Marks

1. (A) State *True* or *False* :— 5

(*a*) TDS is a measure of steam quality.

(*b*) The elements of ultimate analysis of fuel include volatile matter.

(*c*) Fusible plug is boiler mounting.

(*d*) Normally economizer IBR certificate renewal is required once in two years.

(*e*) Superheat is the addition of heat to dry saturated steam without increase in pressure.

(B) Answer following questions in short with one or two sentence :— 10

(*a*) In a power plant boiler, if there is air ingress in the flue gas duct, which auxiliary equipment would be most affected ?

(*b*) While reducing excess air in a boiler, what two parameters should be closely monitored in the exit flue gases ?

(*c*) What is the effect of volatile matter in combustion process ?

(*d*) For which fuel the difference between GCV and NCV will be higher : Coal or Natural gas.

(*e*) Define specific steam consumption.

(*f*) In which type of boiler - water tube or fire tube - is the heating surface more for tubes with the same specification.

(*g*) Why is the safety valve of super-heater set at lower pressure than the safety valve of the boiler drum ?

(*h*) What are the three " Ts " essential for good combustion ?

(*i*) What is purpose of " reheat " in thermal power plant cycle ?

(*j*) What is the quantity of latent heat of steam at critical point ?

[*Turn over*

Marks

(C) Write long forms of the following :— 5

(*a*) MPCB

(*b*) BIS

(*c*) ERW

(*d*) MNRE

(*e*) MSDS.

2. (*a*) Explain how good boiler blow down control can significantly reduce operational cost ? 4

(*b*) Explain boiler low-water cutoff. 5

(*c*) What are the problems associated with low ash fusion temperature of coal ? 5

(*d*) A process requires 6.5 tons/hr of dry saturated steam at 7 kg/cm^2 (g) having specific volume of 0.28 m^3/kg, considering steam velocity 30 m/s, determine the pipe diameter. 6

3. (*a*) Propose a list of loads you consider to prepare boiler house civil foundations. 4

(*b*) What are the reasons for excess leakage of Na^+ ions in DM plant treated water ? How can this problem be overcome ? 5

(*c*) What should be the basic good qualities of drum internals ? 5

(*d*) Convert :— 6

(*i*) 1 bar = ... millimeters of mercury

(*ii*) 860 Calorie = ... Btu

(*iii*) 1 metric h. p. = ... Watt

(*iv*) 1 mmWc= ..... Pa

(*v*) 2m^2 = ... inch^2

(*vi*) 1 kgf.m = ... Joule.

4. (*a*) What are the consequences of overloading of a boiler ? 4

(*b*) What harmful effect does SO_2 have on human being and plant ? 5

(*c*) What primary factors shall be considered in selection of industrial boilers today ? 5

(*d*) 1 meter long boiler tube having 76.2 mm outside diameter and 3.66 mm thickness is bulged due to overheating. On bulging the tube outside diameter has increased by 0.8mm. 6

Calculate :—

(*i*) Thickness of tube after bulging.

(*ii*) % reduction or increase in thickness after bulging.

Marks

5. (*a*) What can a boiler engineer do to assure that he has taken all possible steps to prevent boiler failure ? 4

(*b*) Give the advantages and disadvantages of stoker firing. 5

(*c*) Describe caustic embrittlement. 5

(*d*) A boiler with an output of 80 kg/sec of steam at pressure of 100 kg/cm^2 and 500°C temperature has an efficiency of 85% and it operates at full load. Performance evaluation input data is as below : — 6

* Feed water enters the boiler at 160°C.
* Calorific value of coal = 4600kCal/kg
* Sulphur content of coal = 0.35%
* Ash content of coal = 40%
* Efficiency of ESP and ash collection system = 99.5%

Based on given data calculate :—

(*i*) SO_2 emission through stack in kg/hr.

(*ii*) Particulate emission through stack in kg/hr.

6. Write short notes on *(any four)* :— 20

(*a*) Energy conservation opportunities in steam system.

(*b*) Annual shutdown or off season maintenance of a boiler.

(*c*) Three element drum level control system.

(*d*) RLA study of a boiler.

(*e*) Boiler safety interlocks, importance and its testing schedule.

CON 1442

EXAMINATION BOARD OF BOILERS

(MAHARASHTRA STATE)

(Under the Boiler Operation Engineer's Rule, 2011)

Engineering Drawing

31st January 2016

(TIME : 10-00 A.M. to 1-00 P.M.)

(MAX. MARKS : 100)

Notes.—(1) Attempt any *five* questions.

(2) Figures to the right indicates *full* marks

Marks

1. (*a*) Draw symbols of the following :— 5

   (*i*) Third angle projection method

   (*ii*) Three way valve.

   (*iii*) Safety relief valve

   (*iv*) First angle projection method

   (*v*) Globe valve.

   (*b*) Ref. Fig. No.1 and designate name of all weld joint. 5

   (*c*) Draw to the neat proportion free hand sketches of the following (any *two*) :—

   (*i*) Acme thread 5

   (*ii*) Bushed pin type flanged coupling 5

   (*iii*) Weld neck flange. 5

2. Ref. Fig. No. 2 shows view of a machine component. Draw following views :—

   (*a*) Sectional F.V. looking in the direction X (Section A - A). 10

   (*b*) Sectional L.H. S.V. (Section B - B). 10

   (Give all dimensions for both views).

3. Draw to the neat proportion free hand sketches of the following (any *two*) :—

   (*a*) Swing check valve 10

   (*b*) Ball float steam trap 10

   (*c*) Feed check valve. 10

4. Ref. Fig. No. 3 show the Elevation (Front view) and Top view (Plan) of an object by First Angle Method of projection. Draw its isometric projection taking origin at ' O '. Construct isometric scale 110 mm length. Give all dimensions. 20

5. Take example of Backward curved centrifugal fan used for boiler as ID fan. List out all components of ID fan and draw a neat free hand sketches of components (minimum 5 Components). 20

[*Turn over*

Marks

6. Draw a complete P and I diagram of Condensate Recovery System in your plant. 20

OR

Draw a General layout of Steam Power Plant including :— 20

(*a*) Coal and ash circuit.

(*b*) Feed water circuit

(*c*) Steam circuit

(*d*) Air and gas circuit

(*e*) Cooling water circuit.

Fig. No. 1

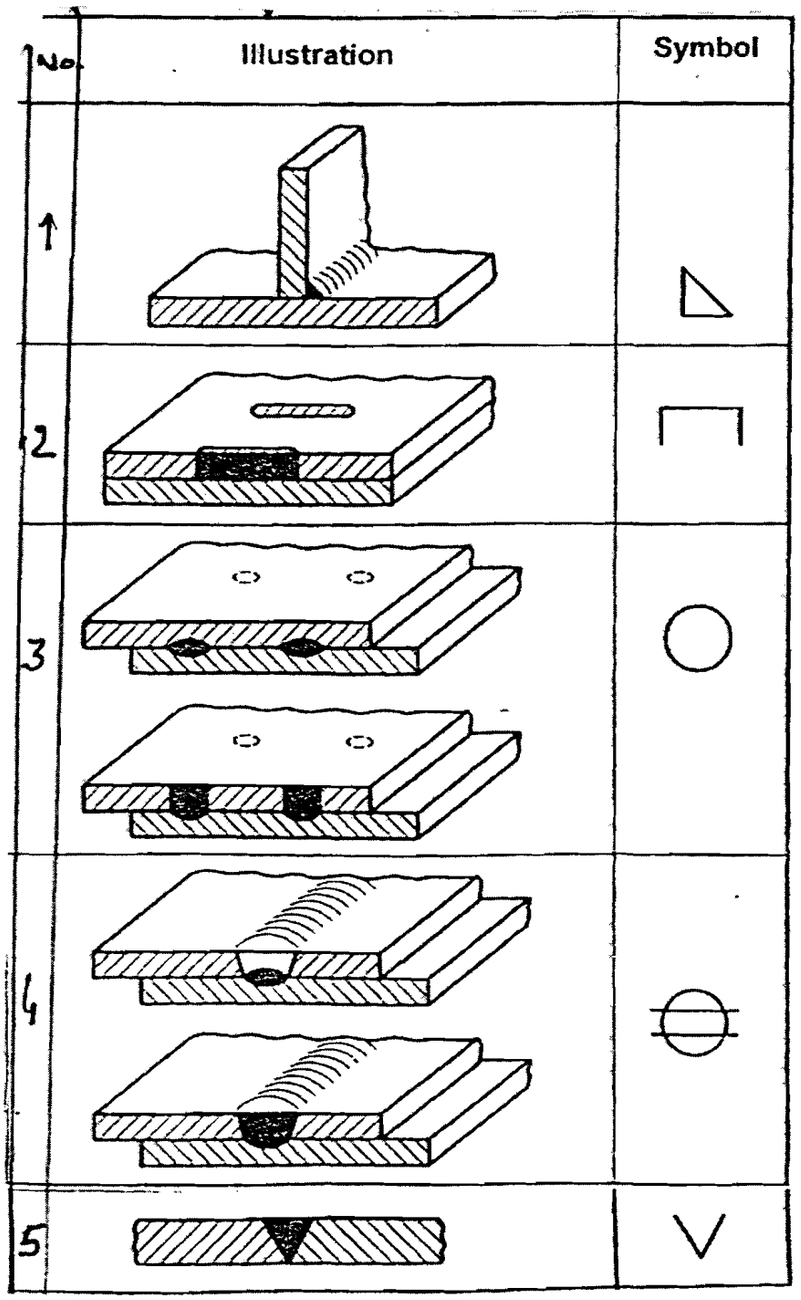

Fig. No. 2 :

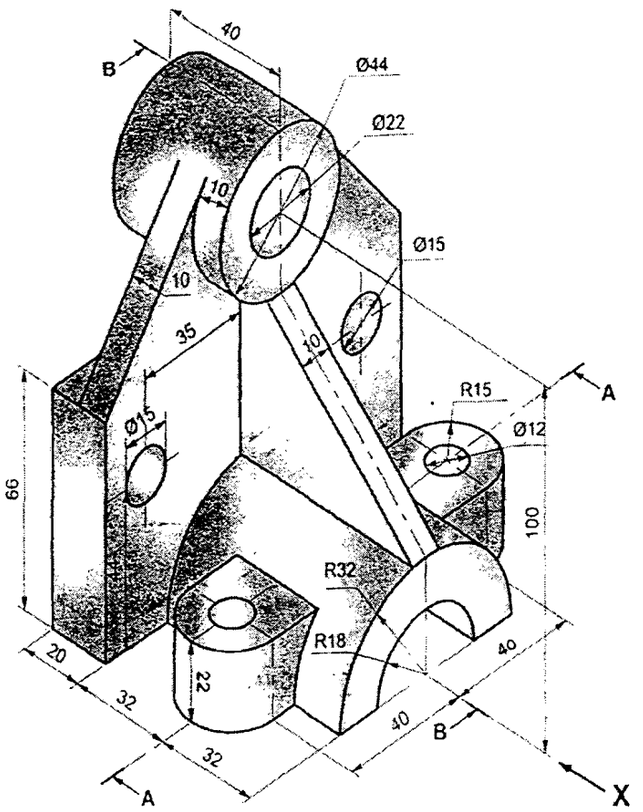

Fig. No. 3:

