Study Material For Boiler Operation Engineer (BOE) Exams

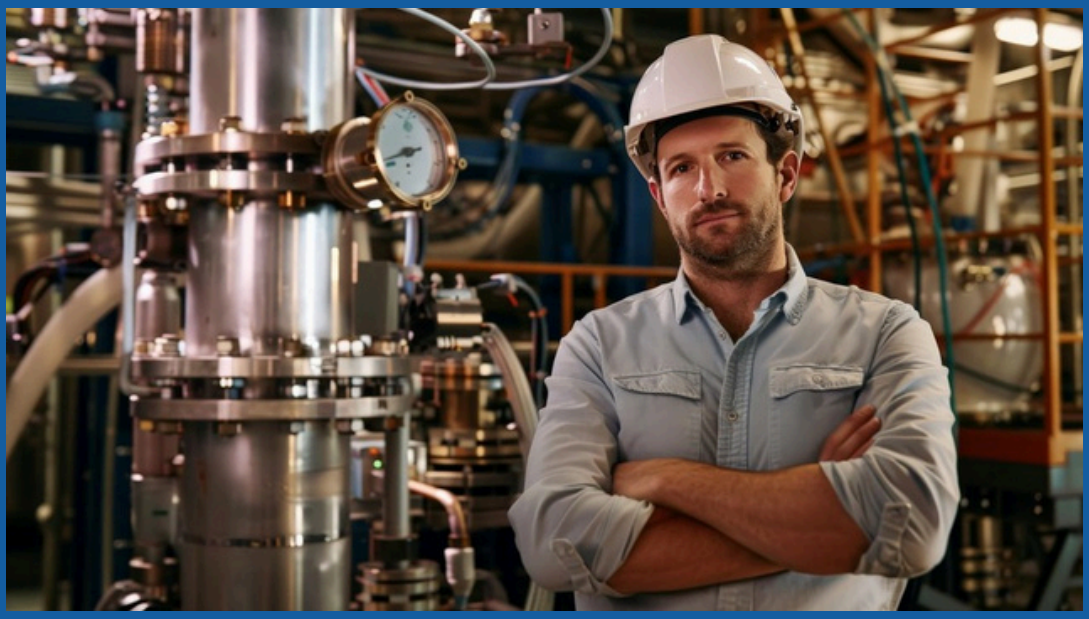

Theory, Numerical Problems, MCQs and Boiler Drawing Problems from BOE Exams

Amazon Flipkart Pothi

PROENGR.IN

SUDESH K JAIN

KERALA BOILER OPERATION ENGINEER EXAMINATION-2025
PAPER-1 (BOILER ENGINEERING-1)

Time: 3.00 Hours **Max. Marks: 100**

(Use of Steam Tables and Mollier chart are permitted for the examination)

PART-A [8x5 = 40 marks]

(Answer any EIGHT questions, Each question carries 5 marks)

Q.1: What are the basic problems faced by a boiler designer in designing a steam generation unit?

Q.2: Why is it important to calculate the weight and volume of steam, feed water and fuel in boiler operation? How do these parameters affect the thermal balance, heat input calculations and load capacity of industrial boilers?

Q.3: Derive the expression for shear stress due to torsion in a solid circular shaft and explain the significance of polar moment of inertia in the formula.

Q.4: What is a superheater? Why is it used in modern boilers?

Q.5: Briefly explain the difference between jet and surface condensers.

Q.6: What are the common methods of draught control in a boiler? Explain.

Q.7: Define calorific value of fuel and explain its importance in boiler efficiency.

Q.8: Explain the role of feed water filters and feed regulators in boiler operation.

Q.9: What is blowdown in a steam boiler? Explain the types of blowdown and how proper blowdown procedures contribute to the safe and efficient operation of the boiler.

Q.10: Explain the process and different types of demineralization used in boiler feed water treatment. Also, specify the desirable quality parameters of feed water after demineralization.

PART B [5x12 = 60 marks]

(Answer any FIVE questions, Each question carries 12 marks)

Q.11: A horizontal fire tube boiler has an internal diameter of 1600mm and a shell thickness of 14mm. The longitudinal joint efficiency is 80% and the permissible stress is 90 Mpa. Using IBR, Calculate the maximum safe working pressure of the shell. Also, explain the practical importance of choosing appropriate joint efficiency.

Q.12: A draught of 5cm of water column is produced by using an ID Fan. The temperature of flue gases and ambient air are 202*C and 37*C respectively. The combustion of coal is 1600kg/hr and the air fuel ratio is 15. Assuming the mechanical and transmission efficiencies as 85% and 88% respectively, find the power of to the prime mover to run the fan. If the ID fan is replaced by a FD fan and assuming same data, find the percentage reduction in power of the prime mover required to run the fan.

Q.13: The following observations were recorded during a boiler trail:

1. Mass of feed water and its temperature: 640kg/hr and 50*C.
2. Steam pressure: 10bar.
3. Fuel used: 55kg/hr.
4. HCV of fuel: 44100kJ/kg.
5. Temperature of gases: 300*C.
6. Boiler room temperature: 30*C.

For finding the dryness fraction of the steam, the steam is passed through a throttling calorimeter and the following observations were noted:

1. Temperature of steam: 120*C.
2. Pressure of steam: 5cm of Hg above atmosphere.
3. Barometric reading: 762mm of Hg.
4. Heating surface of the boiler: 18.6m^2.
5. C_{pg} (for gases): 1.1kj/kg8K.
6. C_{ps} (for Superheated steam): 2.1kJ/Kg*K.
7. The composition of oil used by mass: C=85%, H_2=13% & remaining is ash.
8. The flue gas analysis by volume done by using Orsat apparatus is given as CO_2=12.5%, O_2=4.5% & N_2=83%.

Find the following:

(i) Equivalent evaporation per kg of fuel and per m^2 of heating surface area per hour.
(ii) Efficiency of boiler. Also draw the heat balance sheet on one kg of fuel basis.

Take the steam partial pressure in exhaust gases = 0.7bar.

Q.14: A solid steel shaft of 70mm diameter is used to drive a boiler feed water pump. It transmits 45kW at 200rpm.

(i) Calculate the torque and torsional stress developed.
(ii) Justify whether the shaft is safe if allowable shear stress is 50MPa.
(iii) Discuss the implications of shaft failure on boiler operation.

Q.15: A boiler operator reports low drum level and poor steam quality.

(i) Explain the role of economizer and superheater in boiler heat balance.
(ii) What operational issues may cause low drum level and wet steam?
(iii) Suggest corrective and preventive measures.

Q.16: Describe with neat diagrams and working, operation and maintenance considerations of the following:

(i) Feed Injector	(ii) Steam Accumulator	(iii) Induced draught fan

Explain how each affects boiler efficiency or operational stability.

Q.17: A steam boiler plant includes various valves and mountings such as Fusible plug, Safety Valves, Blow off cock and water level indicator.

(i) Describe the function and operational importance of each.
(ii) Discuss possible consequences of failure of any two in a live plant.

Q.18: Explain the process and significance of steam reheating in power plant operation. Support your answer with a schematic of a reheat Rankine cycle. Also discuss the effect of reheat on:

(i) Steam dryness	(ii) Turbine blades erosion	(iii) Thermal Efficiency

KERALA BOILER OPERATION ENGINEER EXAMINATION-2025
PAPER-2 (BOILER ENGINEERING-2)

(Use of Steam Tables and Mollier chart are permitted for the examination)

PART A [8x5 = 40 marks]

(Answer any EIGHT questions, Each question carries 5 marks)

Q.1: What do you understand by dispersion & explain the concept of effective plume height and its significance draught system.

Q.2: Explain the operation of a spreader stoker with the help of neat sketch.

Q.3: What are the common causes of scale formation in boiler tubes?

Q.4: Discuss in detail the common types of defects found in boiler components and their root causes.

Q.5: List two specific precautions related to fuel and air supply that should be taken before attempting to ignite the burners when starting a boiler.

Q.6: List any four reasons why an economizer might need to be taken out of service.

Q.7: Identify two primary methods for improving fuel economy in a boiler operation. Briefly explain how each method contributes to savings.

Q.8: Name two essential properties required for materials used in high pressure boiler drums. Briefly explain why each property is critical.

Q.9: What are the different types of soot blowers and explain how it is improving the boiler efficiency.

Q.10: Explain the step-by-step procedure, for replacing a portion of a boiler tube.

PART B [5x12 = 60 marks]

(Answer any FIVE questions, Each question carries 12 marks)

Q.11: A textile factory has a battery of 6 Lancashire boilers, each supplying 6TPH of steam at 16bar, 250*C from feed water at 30*C. The boilers burn fuel oil of calorific value 43.96MJ/kg with an overall efficiency of 75%. For efficient combustion 16kg of air per kg of fuel is required for which a draught of 20mm of water gauge is required at the base of the chimney. The flue gases leave the boilers at 320*C. The average temperature of the gases in the stack be taken to be 300*C. The atmosphere is at 30*C. Assuming the velocity of gases at stack exit to be negligible, determine the height of stack and the diameter of its base.

Q.12: Explain different stages of pulverization process of coal with neat sketch.

Q.13: Explain the importance of maintaining an optimal pH range in boiler feedwater. Describe the various issues that can arise due to deviations from this range (both too high and too low pH) and outline the common techniques used to control feedwater pH.

Q.14: Elaborate on the any two non-destructive testing (NDT) methods utilized for detecting defects in boilers. For each method, explain its principle, specific application areas and the types of defects it is best suited to identify.

Q.15: Elaborate on the comprehensive sequence of precautions and steps involved in safely starting a large industrial boiler from a complete cold condition. Discuss the importance of each major steps.

Q.16: Discuss the potential hazards and operational challenges associated with putting an economizer out of service while the boiler is still steaming. Detail how the outlined procedure mitigates these risks.

Q.17: Elaborate on the various instruments commonly used in a boiler house to monitor and control boiler operations for optimal fuel economy. Categorize these instruments by their function and explain the significance of data obtained from each.

Q.18: Describe the different materials used for various boiler components such as drums, tubes headers and economizers. Justify material selection based on operating conditions.

KERALA BOILER OPERATION ENGINEER EXAMINATION-2025
PAPER-3 (ENGINEERING DRAWING)

(Missing dimensions, if any, may be suitably assumed)

Q.1: Isometric view of an object is shown in Figure-1. Draw the front view and top view. Take the Direction X as the front side. [20]

Q.2: Draw the two views of a single riveted double strap zig-zag joint. Take thickness of plate as 10mm. Dimension the drawing in terms of diameter of rivet. [20]

Q.3: Part details of a sleeve and cotter joint is shown in Figure-2. Draw:

(i) Front view top half in section as shown in the direction F. [30]
(ii) Sectional top view of the assembly. [20]
(iii) Side view from left. [10]

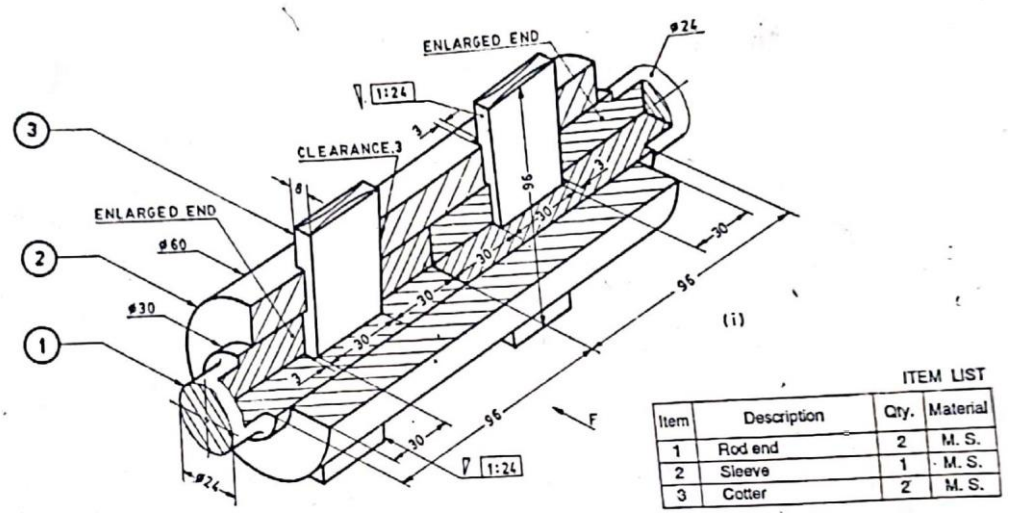

ITEM LIST

Item	Description	Qty.	Material
1	Rod end	2	M. S.
2	Sleeve	1	M. S.
3	Cotter	2	M. S.

[Fig.2]