Study Material For Boiler Operation Engineer (BOE) Exams

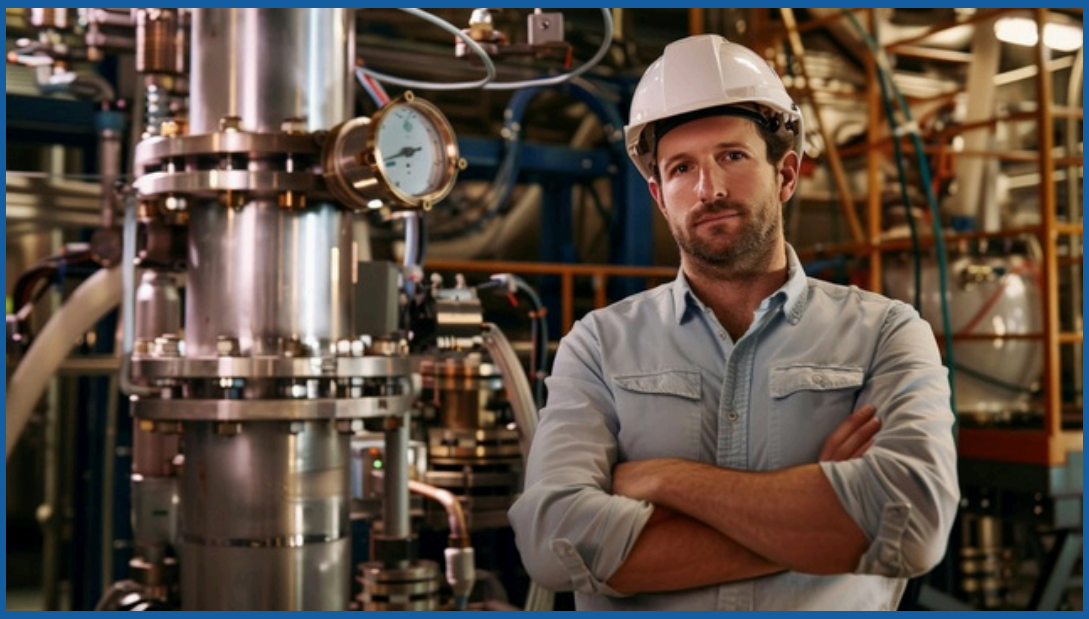

Theory, Numerical Problems, MCQs and Boiler Drawing Problems from BOE Exams

Amazon Flipkart Pothi

PROENGR.IN

SUDESH K JAIN

GOVERNMENT OF KERALA

DEPARTMENT OF FACTORIES AND BOILERS

BOILER OPERATION ENGINEERS EXAMINATION 2022

PAPER-I

Time: 3 hours **Maximum: 100 Marks**

(Use of Steam tables and Mollier chart are permitted for the examination)

Part A

(Answer ***all*** questions; Each question carries *5* marks)

1. Define (i) Equivalent evaporation from and at 100°C (ii) Boiler efficiency

2. What are the advantages of a hollow shaft over a solid shaft in torsion?

3. Describe the various methods used to obtain the maximum possible vacuum in condensers used in modern steam power plants.

4. Discuss the merits and demerits of forced draught over natural draught.

5. How do boiler accessories differ from boiler mountings? Explain.

6. Explain the unique features of high pressure boilers.

7. What is the purpose of a fusible plug? Explain its working.

8. Explain the use and importance of Mollier diagram in practice.

(8 x 5 = 40 marks)

Part B

(Answer ***any five*** questions; Each question carries *12* marks)

9. Why safety valves are required in a boiler? Explain the working of (i) Dead weight safety valve (ii) Lever safety valve and (iii) Spring loaded safety valve with neat sketches.

10. The capacity of a boiler is 2 m^3. Initially it contains 1.5 m^3 of water and 0.5 m^3 of steam in equilibrium condition at 1 bar. Heat is supplied to the boiler from outside keeping inlet and outlet valves closed. The relief valve on the boiler operates only when the absolute pressure in the boiler becomes 50 bar. Determine the heat supplied to the boiler before the relief valve operates.

11. What are the different types of jet condensers? Explain the working principle of any three types of jet condensers with neat figures.

12. Steam at 28 bar and 50°C superheat is passed through a turbine and expanded up to a pressure where the steam is dry and saturated. It is then reheated at constant pressure to its original temperature and then expanded to the condenser pressure of 0.2 bar. The expansion being isentropic, determine (i) Work done per kg of steam (ii) Thermal efficiency with and without reheat.

13. The following readings were taken during the test on a boiler for one hour:

Steam generated = 5400 kg

Coal burnt = 700 kg

Calorific value of coal = 31500 kJ/kg

Dryness fraction of steam entering the superheater = 0.92

Rated pressure of the boiler = 11.5 bar

Temperature of steam leaving the superheater = 250°C

Temperature of hot well = 45°C

Determine (i) Equivalent evaporation per kg of fuel without and with superheater (ii) Thermal efficiency of the boiler without and with superheater (iii) Amount of heat supplied by the superheater per hour.

14. Explain the draught control devices used to adjust the air flow to meet the variable load demand in thermal power plants.

15. A solid shaft of 20 cm diameter has the same cross-sectional area as a hollow shaft of the same material with inside diameter of 15 cm. (I) Determine the ratio of powers transmitted by the two shafts at the same angular velocity. (II) Compare the angles of twist in equal lengths of these shafts, when stressed to the same intensity.

16. Describe the procedure for calculating the safe working pressure of a boiler shell in accordance with the Indian Boiler Regulations. Also discuss the procedure for hydraulic test of boilers.

(5 x 12 = 60 marks)

GOVERNMENT OF KERALA

DEPARTMENT OF FACTORIES AND BOILERS

BOILER OPERATION ENGINEERS EXAMINATION 2022

PAPER - II

Time: 3 Hours **Maximum: 100 Marks**

Part - A

(Standard ***data book*** permitted)

(Answer ***all*** questions, each question carries 5 marks)

1. What is the role of a Boiler Operator? What are boiler logs?

2. What is steam washing? Explain with a sketch the working of condensing type steam washer.

3. What is a 'D' boiler? List out the advantages of 'D' boiler over 'M' boiler.

4. What are boiler baffles? What are the factors that influence baffle arrangement?

5. With a schematic sketch briefly describe the water -steam circuit of a Schmidt - Hartmann boiler.

6. What is priming? How will you detect priming? What will you do in such a situation?

7. What is back washing and what is its normal duration? What is the purpose of back washing?

8. The height of a chimney of a steam generation plant is 40m. Determine (a) the draught produced by the chimney (b) the available draught from the following parameters: Flue gas temperature-300°C, Ambient air temperature-27°C, Mass of air supplied - 22kg/kg of fuel, Available draught - 0.82times natural draught.

(8x5 = 40 marks)

Part - B

(Answer ***any*** 5 questions, each question carries 12 marks)

9. Explain the working of an air cycle pressurized fluidized-bed combustion system.

For the air cycle pressurized fluidized -bed system, find the bed height and ratio of flow through the bed tubes to flow through the bed using the following design parameters:

Velocity of flow through the bed - 1m/sec, Fraction of bed volume occupied by the tube - 0.17, Temperature of the air leaving the compressor - 600K, Temperature of the air entering in to the Bed - 600K, Lower heating value per mass of fuel- 30,000kJ/kg, Temperature of the hot gas leaving the bed -1200K, Temperature of the hot gas at the inlet of the turbine -1150K, Diameter of the tube - 25.4mm, Convective heat transfer coefficient - 250W/m²K, Stoichiometric air fuel ratio- 0.1, Excess air used - 35%. (6+6 =12)

10. (a) Explain the working of double-drum type economiser. (4)

(b)The following parameters were recorded for a surface condenser:

Condenser vacuum - 680mmHg, Barometric pressure - 760mmHg, mean condenser temperature - 35°C, Condenser exit temperature - 29°C, Rise in temperature of the cooling water- 10°C, Rate of steam condensation - 24ton/Hr, Rate of cooling water flow - 1100ton/Hr. Determine (i) the mass of air present per unit volume of the condenser (b) the dryness fraction of steam at the inlet to condenser (c) the vacuum efficiency of the condenser. (8)

11. The chimney of a steam generation plant is 35m high producing a natural draught of 30m column of hot flue gases. Estimate:

(i) the temperature of the flue gases leaving the chimney. (ii) The heat lost to flue gases if the average temperature of the flue gases leaving the boiler in artificial draught system 160°C. The mean specific heat of flue gases is 1.05kJ/kg°C (iii) the chimney efficiency (iv) the amount of total heat spent in producing natural draught, (v) the temperature of flue gases in the chimney for maximum discharge. Assume Calorific value of coal - 27300kJ/kg, Air supplied for combustion - 20kg/kg of coal burnt, Ambient air temperature -27°C. (12)

12. A stoker - fired water tube boiler burns coal at the rate of 4ton/Hr to generate steam of 30kg/cm² abs and 430°C at the rate of 30ton/Hr. Evaluate the boiler performance from the following data:

(i) Components by proximate analysis of the coal: Ash - 12.7% by weight, Moisture - 7.9% by weight (ii) Gross calorific value of coal - 6250kcal/kg, (iii) Components by flue gas analysis: CO_2 = 12.85%, O_2 =6.5%, N_2 =rest, (iv) Carbon present in the cinder as unburnt combustible - 2.75%, (v) The feed water temperature - 90°C, (vi) Flue gas temperature at economizer outlet - 150°C, Flue gas pressure at economizer outlet - 755mmHg, (vii) Air temperature at burner inlet: 30°C DB and 22°C WB. Ignore the presence of sulphur and oxygen in the coal. (12)

13. Explain with a neat sketch the operating principle of a three-circuit nuclear power station. Why is the heat transfer agent in the 2nd circuit circulated at higher pressure than liquid sodium in the primary circuit? Why does a nuclear steam generator involving liquid sodium cooled reactor consist of three circuits instead of one? (6+4+2)

14. Consider the primary combustion zone of a gas turbine as a well stirred reactor with a volume of 900cm³. Kerosene ($C_{12}H_{24}$) and stoichiometric air at 298K flow into the reactor, which is at 10atm and 2000K. Neglect heat loss and dissociation. Take lower heating value of the fuel as 42.5MJ/kg. Use one - step global kinetics with the parameters in the molar reaction rate equation as A = $5x10^{11}$, Activation energy, E = 30,000cal/gmol, a= 0.25, b= 1.5 and m=n=0. Find the fractional amount of fuel burned, the fuel flow rate and the residence time in the reactor. (12)

15. (i) What are the toxic organics that may exit the stack during municipal solid waste (MSW) burning? In which form do they mainly exit? (ii) What steps should be taken for the efficient destruction of these harmful, incomplete products of combustion? (iii) What steps should be taken to ensure good furnace operation in a large mass -burning incinerator? (iv) Apart from the mass burning, what other technologies are available for deriving energy from waste? (1+3+5+3)

16. (a)What are the merits and demerits of an open system of fuel drying?

Steam is generated in a waste heat boiler at a pressure of 1.18MPa by the flue gas obtained from the combustion of a gas having N_2 - 60%, CO-25%, CO_2 -6%, H_2 - 9% in a rotary furnace. The flue gases enter the waste - heat boiler at a temperature of 652°C and leave it at 227°C. Calculate: (i) the mass of flue gas produced per m³ of producer gas burned (ii) the mass of water evaporated in the Waste Heat Boiler (WHB) per m³ of producer gas burned, (iii) the percentage of heat recovered in the WHB. Given: Boiler efficiency - 74%, Feed heater temperature inlet to WHB - 350K, Excess air used for combustion - 25%, C_p of flue gas - 1.05kJ/kg K. Enthalpy of steam at 1.18MPa - 2785kJ/kg, Calorific value of CO- 12.7MJ/m³, Calorific value of H_2 - 10.78 MJ/m³. (3+9)

GOVERNMENT OF KERALA

DEPARTMENT OF FACTORIES & BOILERS

BOILER OPERATION ENGINEER'S EXAMINATION-2022

PAPER-III DRAWING EXAMINATION

Time: Three Hours **Maximum:100 Marks**

Answer all questions

Missing dimensions,if any,may be suitably assumed

1.Answer the following

(a) Draw the two views of a hexagonal nut for M-30 bolt.

(b) Draw the two views of a single riveted double strap butt joint. Take thickness of plate as 10 mm. Dimension the drawing in terms of diameter of rivet.

(2X15=30 marks)

2. Parts of a blow off cock are given in Fig. Draw the following assembled views to a suitable

scale.

(a) Full Sectional elevation (50)

(b) Top view (20)

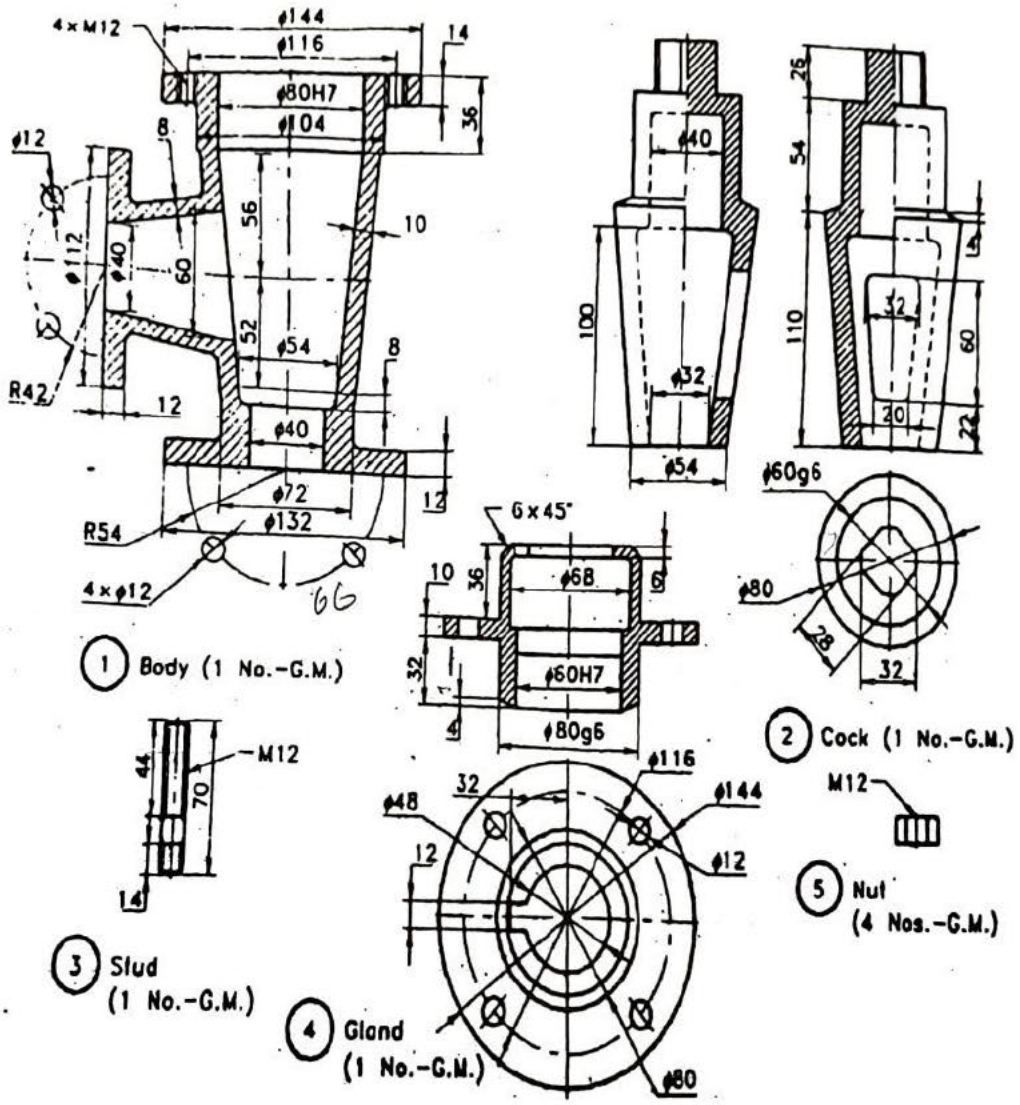
4×M12
φ144
φ116
14
φ80H7
φ104
36
φ12
8
56
10
φ112
φ40
60
52
φ54
8
R42
12
φ40
φ72
12
R54
φ132
4×φ12
66
1 Body (1 No.-G.M.)
φ40
100
φ32
φ54
26
54
110
32
60
20
22
φ60g6
φ80
28
32
2 Cock (1 No.-G.M.)
6×45°
10
36
φ68
32
φ60H7
4
φ80g6
44
M12
70
14
3 Stud
(1 No.-G.M.)
φ116
32
φ48
φ144
12
φ12
4 Gland
(1 No.-G.M.)
φ80
M12
5 Nut
(4 Nos.-G.M.)