Study Material For Boiler Operation Engineer (BOE) Exams

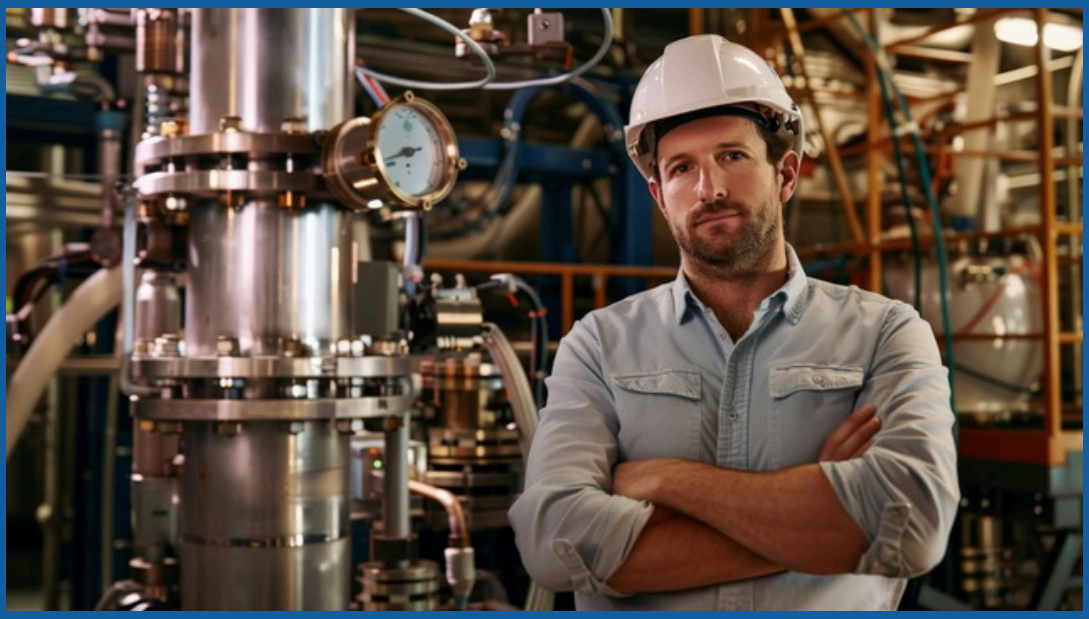

Theory, Numerical Problems, MCQs and Boiler Drawing Problems from BOE Exams

Amazon Flipkart Pothi

PROENGR.IN

SUDESH K JAIN

GOVERNMENT OF KERALA

DEPARTMENT OF FACTORIES AND BOILERS

BOILER OPERATION ENGINEER'S EXAMINATION 2021

PAPER-I

Time: 3 hours **Maximum: 100 Marks**

(Use of Steam tables and Mollier chart are permitted for the examination)

Part A

(Answer ***all*** questions; Each question carries *5* marks)

1. What are the sources of heat loss in boiler plants? Explain the methods used to reduce these losses.

2. Define bending stress. Explain the procedure for finding out the bending stress in a symmetrical section.

3. Discuss the merits and demerits of surface condensers over jet condensers.

4. Why are boiler operation and maintenance considered as essential elements in boiler design?

5. What is a steam trap? Explain the working of an expansion type steam trap.

6. Enumerate the factors that should be considered while selecting a boiler.

7. Why blow-off cock is operated periodically when the boiler is working? Explain.

8. Explain the term 'quality of steam'. Differentiate between wet, dry saturated and superheated steam.

(8 x 5 = 40 marks)

Part B

(Answer ***any five*** questions; Each question carries *12* marks)

9. What are the advantages of forced draught over induced draught? Also explain the function of a balanced draught system with a neat figure.

10. A boiler generates 7.5 kg of steam per kg of coal burnt at a pressure of 11 bar, from feed water having a temperature of 70°C. The efficiency of the boiler is 75%, factor of evaporation is 1.15 and specific heat of steam at constant pressure is 2.3. Determine (i) Degree of superheat and temperature of steam generated (ii) Calorific value of coal in kJ/kg and (iii) Equivalent evaporation in kg of steam per kg of coal.

11. Steam at a pressure of 15 bar and 250°C is expanded through a turbine at first to a pressure of 4 bar. It is then reheated at constant pressure to the initial temperature of 250°C and is finally expanded to 0.1 bar. Using Mollier chart, estimate the work done per kg of steam flowing through the turbine and the amount of heat supplied during the process of reheat. Compare the work output when the expansion is direct from 15 bar to 0.1 bar without any reheat. Assume all expansion processes to be isentropic.

12. What are the different types of surface condensers? Explain the working principle of any three types of surface condensers with neat figures.

13. A vessel of 1 m^3 capacity contains steam at 10 bar and 0.92 dry. Steam is blown off until the pressure in the vessel drops to 5 bar. Then the valve is closed. Determine the mass of steam blown off.

14. Explain the working of (i) Economiser (ii) Superheater and (iii) Air preheater with neat sketches.

15. A hollow shaft of diameter ratio 3/8 is required to transmit 500 kW at 110 rpm, the maximum torque being 20% greater than the mean. The shear stress is not to exceed 60 MN/m^2 and the twist in a length of 3 m not to exceed 1.4 degrees. Determine the maximum external diameter satisfying these conditions. Take modulus of rigidity G = 84 GN/m^2.

16. Explain the working of (i) Water level indicator (ii) Feed check valve (iii) Feed pump, with neat sketches.

(5 x 12 = 60 marks)

§§§

GOVERNMENT OF KERALA

DEPARTMENT OF FACTORIES AND BOILERS

BOILER OPERATION ENGINEER'S EXAMINATION 2021

PAPER - II

Time: 3 Hours **Maximum: 100 Marks**

Part - A

(Use of Steam tables and Mollier chart are permitted for the examination)

(Answer ***all*** questions, each question carries 5 marks)

1. Define M.C.R of a boiler. Discuss the guidelines for selection of boilers for steam power plants.

2. Differentiate between sub-critical and super critical boilers. What are the advantages of supercritical boiler over sub-critical boilers?

3. Explain briefly the common non-destructive testing (NDT) techniques available for condition assessment of boilers.

4. What is stocker firing? Explain with a sketch the working of a spreader stocker.

5. Explain what do you mean by the term '*breakthrough*'?

6. List out the various methods of steam temperature control. Discuss any two with suitable sketches.

7. What is the working principle of an electrostatic precipitator? With the help of a neat diagram, explain an electrostatic precipitator.

8. In a condenser test, the following observations were made: vacuum = 70.1 cm of mercury, barometer = 76.3 cm of mercury, mean temperature of condensation = 35°C, hot well temperature = 29°C, amount of cooling water = 46270 kg/hr, inlet temperature of cooling water = 17°C, out let temperature of cooling water = 32°C, amount of condensate = 1200kg/hr. Determine (a) the amount of air present per m^3 of condenser volume (b) the state of steam entering the condenser (c) the vacuum efficiency.

(8x5 = 40 marks)

Part - B

(Answer ***any*** 5 questions, each question carries 12 marks)

9. Explain the procedure that are adopted for a pulverized coal fired drum type boiler for normal shutdown to cold.

10. List out the techniques which may result 8 to 10% savings of coal, if implemented in a coal fired boiler.

11. Explain with neat sketch the working of spray type scrubber. Indicate its advantages and limitation to use.

12. What is carry over in boilers? What are its effects? Explain the factors that affect the carry over. ✓

13. Municipal Solid Waste (MSW) is to be utilized as an alternate fuel for steam generation. The fuel composition on a weight basis is given as C_s =25%, H_2 = 3.3%, N_2 = 0.5%, H_2O = 28%, O_2=21.1%, S = =0.1%, Glass, metals, ash = 22% .The material stream is treated to remove the non-combustibles for recycling. Air enters the burner at 25°C and 104kPa, and the dry exhaust gases leave the boiler at 500K and 101kPa, with the following stack analysis. CO_2 = 13.6%, O_2 = 4.4%, CO = 3.4%, SO_2 =0.02%. Find (a) percentage excess air (b) stack dew point temperature (c) sulphur dioxide production in percentage of MSW (d) boiler efficiency.

14. Consider a steam power plant that operates on a simple ideal Rankine cycle and has a net power output of 45MW. Steam enters the turbine at 7MPa and 500°C and is cooled in the condenser at a pressure of 10kPa by running cooling water from a lake trough the tubes of the condenser at a rate of 2000kg/s. Assume an isentropic efficiency of 87% for both the turbine and the pump. Determine (a) the thermal efficiency of the cycle (b) mass flow rate of steam (c) the temperature rise of the cooling water. (d) Plot the cycle on T-s diagram with respect to saturation lines.

15. A boiler generates 7.2 tonne of steam per hour at a pressure of 2 MN/m^2 and temperature 350°C from feed water at 50.4°C. When fired with oil of calorific value 46MJ/kg, boiler attains an efficiency of 78%. The steam at 350°C is fed to a turbine that develops 650kW and exhausts at 0.2 MN/m^2, the dryness fraction of steam being 0.94. Determine (a) the mass of oil fired per hour (b) the fraction of the enthalpy drop through the turbine which is converted to useful work (c) Also determine the heat transfer available per kg of exhaust steam above 50.4°C, if the turbine exhaust is used for process heating.

16. Design a loop type super heater for performing the following duty: steam to be superheated = 250 tonne/hr, superheated steam pressure = 10 MN/m^2, superheated steam temperature = 525°C. Also given flue gas is in cross flow with steam.

Data given:

Super heater coils are to be designed from steel tubes:

Outer diameter (OD) = 35mm and inner diameter (ID) = 30mm. Thermal conductivity of the material of the tubes = 25W/m.°C, average velocity of the steam is 18m/s, velocity of flue gas in the narrow section of the bank of tubes = 15m/s. The tubes are to be disposed in the mode of in-line arrangement with longitudinal and transverse pitch ratio 1.2 and transverse pitch = 2.5x OD of the tubes.

Flue gas composition: 13% CO_2, 11% H_2O, **Flue gas flow rate:** 600tonne/hr, **Flue gas inlet temperature:** 1200°C.

(5x12 = 60 marks)

GOVERNMENT OF KERALA

DEPARTMENT OF FACTORIES&BOILERS

BOILER OPERATION ENGINEER'S EXAMINATION-2021

PAPER-III DRAWING EXAMINATION

Time: Three Hours **Max.Marks:100**

Answer all questions

Missing dimensions, if any, may be suitably assumed

1. Answer the following

(a) With neat sketches illustrate various types of fits.

(b).Isometric view of an object is shown in fig .Draw the front view and top view .Take the direction F as the front side.

(2X15=30marks)

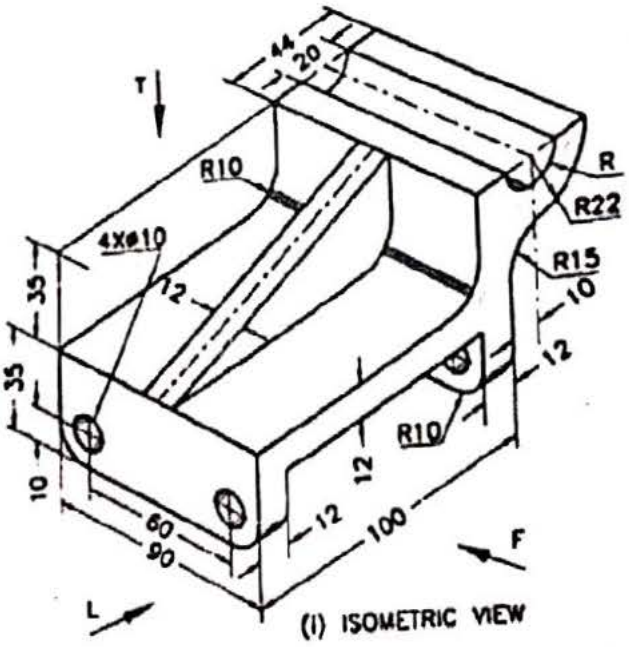

(i) ISOMETRIC VIEW

2. Parts of a stuffing box are given in Fig. Draw the following assembled views to a suitable scale.

a .Elevation right half in section (50)

b. Top view (20)

