Study Material For Boiler Operation Engineer (BOE) Exams

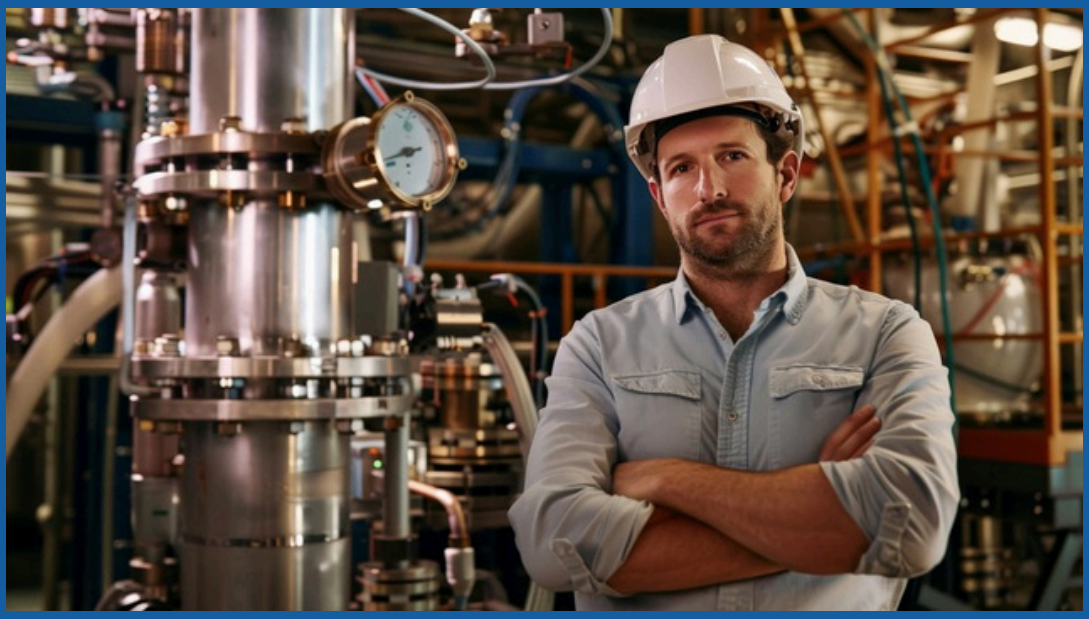

Theory, Numerical Problems, MCQs and Boiler Drawing Problems from BOE Exams

Amazon Flipkart Pothi

PROENGR.IN

SUDESH K JAIN

Boiler Operation Engineer's Examination

PAPER-I

Time:3 hours **Maximum:100 Marks**

Part-A

(Answer *all* questions)

Each question carries 5 marks

1. 50 kg of water is heated to produce steam at 6 kg/cm^2 pressure (abs.) from a temperature of 30°C to 100°C over a period of 25 minutes. The specific heat of water is 4.19 kJ/kg K. The specific enthalpy of steam is 2085 kJ/kg. Calculate the steam production rate.
2. Describe any five major criteria for selection of steam boilers used on land.
3. Calculate the bending stress in a simply supported steel rod of mass 100 kg and length 10 m. Take the flexural modulus of elasticity of steel as 200 GPa and density as 7800 kg/m^3.
4. What are the major factors that affect the safe operation of boilers?
5. What are the advantages and disadvantages of a globe valve over a gate valve?
6. Explain briefly the different types of draught systems.
7. Differentiate between direct method and indirect methods of assessing boiler efficiency.
8. In a surface condenser, the vacuum maintained is 700 mm of Hg. The barometer reads 754 mm. If the temperature of the condensate is 18°C, determine: 1. Mass of air per kg of steam; and 2. Vacuum efficiency.

(8 x 5 = 40 marks)

Part-B

(Answer *any five* questions)

Each question carries 12 marks

9. What is the function of steam trap? What are the different types of steam trap? Explain the performance assessment methods.
10. What is the purpose of a feed check valve? Explain the working of a feed check valve with a neat sketch.

11. A boiler with super-heater generates 5800 kg/h of dry saturated steam at 15 bar. The boiler exit temperature is 300°C. The feed water temperature is at 75°C. The overall efficiency of the plant is 80%. Determine the coal consumption rate if the calorific value of coal is 30,000 kJ/kg. Also, find the equivalent evaporation from and at 100°C. What will be the area of the super-heater surface if the overall heat transfer coefficient is 400,000 kJ/ m^2-hr?

12. What is the purpose of an economizer? With a neat sketch, explain the working an economizer.

13. With the help of neat sketch, describe the working of a water level indicator. Explain how the flow of steam and water is automatically stopped when the glass tube breaks?

14. What is boiler blow down? Why is it necessary? Explain intermittent and continuous blow down.

15. Find the draught created by a 30 m high chimney, when the flue gas temperature passing through the chimney is 300°C, the ambient temperature is 20°C, and the minimum quantity of air required per kg of fuel is 15 kg. What would be the velocity of the flue gases in the chimney if 50% of the theoretical draft is lost in friction at the grate and passages?

16. With necessary diagrams, explain the principle of parallel flow and counter flow jet condensers.

(5 x 12 = 60 marks)

GOVERNMENT OF KERALA

DEPARTMENT OF FACTORIES AND BOILERS

BOILER OPERATION ENGINEER'S EXAMINATION, NOVEMBER 2016

PAPER-II

Time: 3 Hrs **Maximum: 100 Marks**

Part-A

(Answer all questions. Each question carries 5 marks)

1. What is pH value? How is it controlled in feed water?
2. Enlist the major factors which affect the boiler performance.
3. What are the principal heat losses that occur in boiler?
4. With the help of a sketch describe the pulverized coal firing system
5. What are the causes of boiler corrosion? Suggest suitable methods to prevent corrosion.
6. Discuss about the causes of black smoke emission and suitable remedial measures to rectify the same.
7. What properties are considered to be important in selecting materials for boiler shell and tubing?
8. List out the factors to be considered for the selection of boilers.

Part-B

(Answer any five questions. Each question carries 12 marks)

9. What are the most common boiler defects? Explain the methods to rectify them.
10. Describe the various types of burners used to burn pulverized coal
11. What is scale formation in boilers? How is it differ from corrosion? Explain the methods to prevent scale formation.
12. Why is feed water treatment important? Explain the different external water treatment methods.
13. Elucidate the various steps involved in testing and commissioning of boilers.
14. What precautions are to be taken before starting a boiler? Discuss the procedural steps to be followed to start a boiler from cold condition.
15. Suggest and describe the various methods by which fuel economy in boiler plants can be achieved.
16. a. What is the function of chimney in natural draught and artificial draught systems?
    b. Determine the height of a chimney to produce a static draught of 15mm of water. The temperature of the gases in the chimney is 270°C and the temperature of air in the surrounding atmosphere is 20oC. The atmospheric pressure is 760mm of Hg. The value of characteristic gas constant 'R' for air is 287 J/kg K and for the gases is 255 J/kg K.

GOVERNMENT OF KERALA

DEPARTMENT OF FACTORIES &BOILERS

BOILER OPERATION ENGINEER'S EXAMINATION NOVEMBER 2016

PAPER-III MACHINE DRAWING

Time: Three Hours **Maximum:100 Marks**

(Answer all questions)

Missing dimensions if any,may be suitably assumed

1.An isometric view of of an end bracket is shown in Fig.1.Draw the following views of it

(a) Front elevation looking in the direction of F (10)

(b) Top view (10)

(c) Side view from left (10)

2.Fig.2 shows the details of a stuffing box.Assemble the parts and draw the following views.

(a) Elevation right half in section (50)

(b) Top view (20)

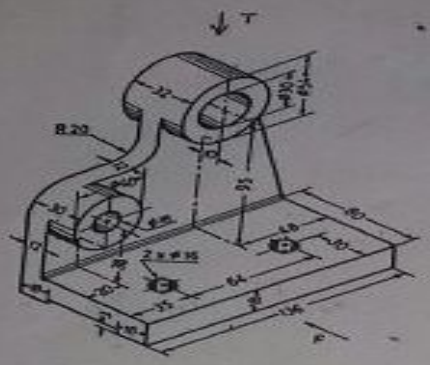

Fig. 1 End bracket

Fig. 2 **STUFFING BOX**

ITEM LIST

Item	Description	Qty.	Material
1	Body	1	C. I.
2	Gland bush	1	Brass
3	Stud	2	M. S.
4	Nut	2	M. S.
5	Gland	1	C. I.
6	Piston rod	1	Steel

