Study Material For Boiler Operation Engineer (BOE) Exams

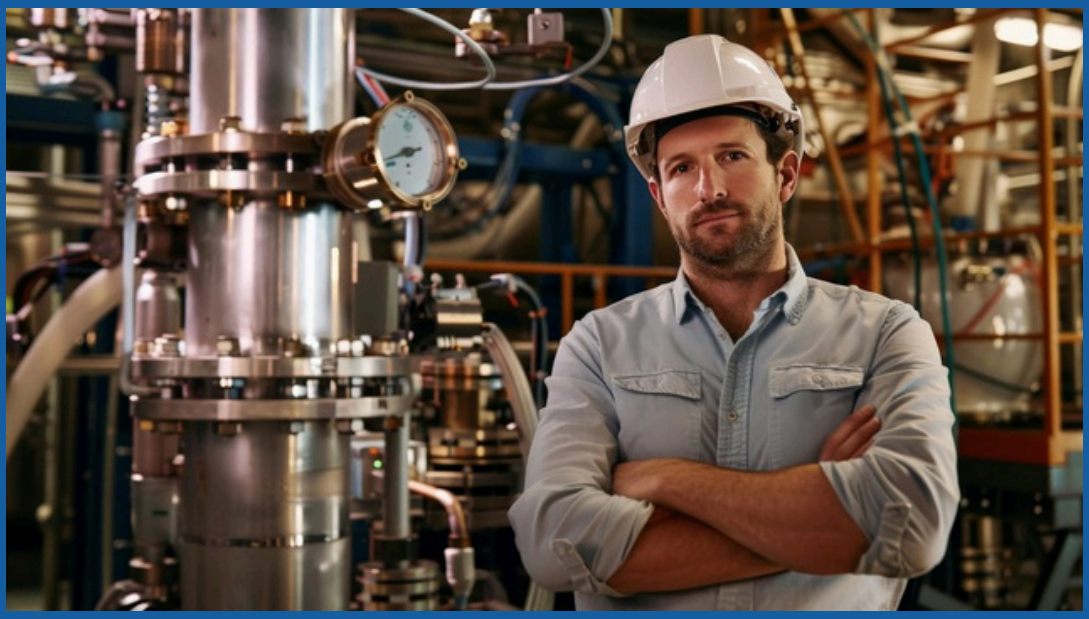

Theory, Numerical Problems, MCQs and Boiler Drawing Problems from BOE Exams

Amazon Flipkart Pothi

PROENGR.IN

SUDESH K JAIN

Azadi Ka Amrit Mahotsav

GOVERNMENT OF KARNATAKA

DEPARTMENT OF FACTORIES, BOILERS, INDUSTRIAL SAFETY AND HEALTH
BOILER OPERATION ENGINEERS EXAMINATION - 2022

SUBJECT: BOILER PAPER-1 REGISTER NUMBER | 2 | 0 | 2 | 1 | 0 | 9 | 1 | 6 |

MAXIMUM MARKS: 100 TIME:3 HOURS

A. Choose the right answer 25x1 = 25 marks

1. Safety valve
   a. Controls the boiler operating range
   b. Controls the high or low water levels
   c. Prevents the boiler from exceeding its maximum permissible working pressure
   d. All the above
2. The presence of carbon monoxide in flue gas indicates
   a. Complete combustion
   b. Incomplete combustion
   c. Better combustion
   d. All the above
3. For power generation, the following type of boiler is generally used
   a. Water tube boiler
   b. Fire tube boiler
   c. Both (a) and (b)
   d. None of the above
4. In a circulating fluidised bed combustion boiler
   a. Only coal can be burnt
   b. Only liquid fuel can be burnt
   c. Only fire wood can be burnt
   d. Any grade of fuel can be burnt
5. In a top supported boiler
   a. The entire boiler expands upwards
   b. The entire boiler expands downwards
   c. The boiler does not expand
   d. None of the above
6. The density of mild steel is
   a. 130 kg / m^3 b. 1300 kg / m^3 c. 7850 kg / m^3 d. 78.5 kg / m^3

7. Natural draft is created by
   a. Chimney
   b. 1D fan
   c. FD fan
   d. none of the above
8. Platen superheater in a boiler absorbs heat mainly by
   a. convection
   b. radiation
   c. convection and conduction
   d. none of the above
9. The following is not a boiler mounting
   a. Steam stop valve b. fusible plug c. safety valve d. economiser
10. For isolating purpose in steam or water pipelines, generally the following is used
   a. gate valve
   b. globe valve
   c. check valve
   d. none of the above
11. Chances of fire in APH are more
   a. During furnace wall blowing
   b. During cutting in of coal burner
   c. Both (a) and (b)
   d. During start up and shut down of boiler
12. In a superheater heat is added to
   a. Increase the temperature of steam
   b. Increase the pressure of steam
   c. Increase both temperature and pressure of steam
   d. None of the above
13. Heat added to feed water in economiser is
   a. latent heat
   b. sensible heat
   c. both sensible and latent heat
   d. none of the above
14. Reheater receives steam from
   a. superheater b. deaerator c. economiser d. high pressure turbine
15. In supercritical pressure, boilers are of
   a. Recirculation type b. once through c. both (a) and (b) d. none of the above
16. Ultimate stress is _____ yield stress for an object subjected to load
   a. lower than
   b. higher than
   c. same as
   d. none of these
17. Reheating improves
   a. Dryness fraction of steam entering the last stages of turbine
   b. Overall cycle efficiency
   c. Both (a) and (b)
   d. None of the above
18. The stress of a steel rod of 20 mm in diameter when subjected to an axial pull of 4,400 kgs is
   a. 1800 Kg/ cm^2 b. 1400 Kg/cm^2 c. 2800 Kg/ cm^2 d. 1760 Kg/ cm^2

19. At critical point i.e. at pressure = 221.2 bar, the latent of heat of evaporation of water is
    a. Maximum b. minimum c. depends on temperature also d. zero
20. Locomotive boiler is
    a. Horizontal multi tubular water tube boiler
    b. Vertical fire tube boiler
    c. Horizontal multi tubular fire tube boiler
    d. None of the above
21. Which of the following fuels has the highest calorific value?
    a. Anthracite coal b. bituminous coal c. lignite d. peat
22. The safety valve of a drum compared to safety valve on superheater of the same boiler it set for lifting at
    a. Same value
    b. Higher value
    c. Lower value
    d. None of the above
23. In a forced circulation boiler force is applied to
    a. draw water
    b. drain the water
    c. circulate the water
    d. all the above
24. The following is a boiler mounting
    a. Economiser b. injector c. fusible plug d. superheater
25. Natural gas has _____ ignition temperature when compared to coal
    a. higher
    b. lower
    c. same
    d. none of the above

15x2 = 30 marks

3. Answer the following

1. What is the function of superheater?
2. What are the advantages of water tube boiler over fire tube boiler?
3. What do you mean by circulation ratio in a boiler?
4. Why fusible plug is used in fire tube boiler?
5. What is excess air?
6. Why buck stay is provided in boiler?
7. What is the function of feed injector?
8. What are the advantages of preheating the air in boiler?
9. What is GCV and NCV of a fuel?
10. A safety valve opens at 180 kg/cm^2 pressure and gets reseated at 172kg/cm^2 pressure. Calcula the blow down percentage.
11. What are the harmful effects of sulphur present in coal when it is used as a fuel in boiler?

State True or false

12. In surface condenser, there is direct mixing of steam and water F
13. Coal requires more excess air than natural gas for combustion T
14. Maintaining higher superheater temperature than permissible for longer durations frequentl lead to superheater tube leak T
15. Largest boiler efficiency loss is due to heat lost because of surface radiation. T

Answer the following **5x3 = 15 marks**

1. List out boiler mountings and mention their functions
2. What are the functions of Steam drum in a boiler and mention the function of drum internals?
3. Explain jet condenser and surface condenser
4. How the output of ID fan can be varied?
5. What is superheating? What are the methods of controlling superheater steam temperature?

). Answer the following **6x5 = 30 marks**

1. What are the different types of valves used in boiler? State the purposes for which they are used.
2. (a) What is a safety valve? What are different types?
   (b) What is the difference between a safety valve and a pressure relief valve?
3. Briefly explain how a trisector air preheater works
4. Write short notes on economizer, water hammering and deaerator
5. Why fluidised bed combustion boilers are gaining ground for utility power and cogen industries?
6. A 200 mm (depth) x 120 mm (width) rectangular beam is subjected to maximum bending moment of 80,000 kg cm. Determine the maximum stress in the beam.

Or

A boiler produces 220 tons of dry saturated steam per hour at a pressure of 60kgf/ cm^2 abs from feed water at a temperature 120 degree centigrade.
Coal consumption is 1200 Tons/day.
Calorific value of coal = 4200 K cal/kg
Enthalpy of dry saturated steam at 60kgf/ cm^2 abs = 665.4 K cal/kg
Entalphy of water at 120 degree centigrade =120 K cal/kg
Calculate the overall efficiency of the boiler

.....

GOVERNMENT OF KARNATAKA

DEPARTMENT OF FACTORIES, BOILERS, INDUSTRIAL SAFETY AND H

Boiler Operation Engineers Examination: 2022

Subject: BOILER PAPER-II

Registration Number

Maximum Marks: 100

Duration: 3 Hours

PART - A

I. Choose the correct answer against each question. **25 X 1**

1) The total heat or heat content in a system is also called as
   a) Entropy b)Enthalpy
   c) Specific Heat d)Latent heat

2)The sum of gauge pressure & atmospheric pressure is called as
   a) Absolute pressure b) Vacuum pressure
   c) Standard pressure d) Normal pressure

3)What are the two major ingredients of majority of the fuels?
   a) Carbon & Nitrogen b) Nitrogen & Oxygen
   c) Carbon & Hydrogen d) Oxygen & Hydrogen

4)Factor of Safety is defined as the ration of,
   a) Ultimate Strength to internal stress b) Working stress to ultimate strength
   c) Ultimate strength to actual stress d) Shear Stress to Tensile Stress

5)When the steam is first being introduced into a piping system it is important that
   a) All the valves are wide open
   b) All the drains are closed
   c) All the condensate is removed
   d) All bypass valves are fully closed

6) Steam just above the water surface in boiler drum is called
   a) Dry saturated steam b) Wet steam
   c) Superheated steam d)All of the above

7) Atmospheric pressure is equal to
   a) 1.013 bar b) 10.13 kN/m2 c) 790 mm Hg d) 10.13 bar

8) Which of the following boiler operates above critical pressure
   a)Once through boiler
   b)Natural circulation boiler
   c) Forced circulation Boiler
   d) Water tube boiler

9) Bomb calorimeter is used to find
   a) Dryness fraction of steam
   b) Gross calorific value of gases
   c) Gross calorific value of solid & liquid fuel
   d) Net calorific value of solid & liquid fuel

10) A device used to heat the feedwater by utilizing the heat in the exhaust flue gases, before through the chimney is
   a) Economizer b) Superheater c) Air pre heater d) Feed check valve

11) The purpose of fins on a convector tube is to,
   a) Strengthen the tubes
   b) Make it lighter in construction
   c) Increase the heat transfer area
   d) Prevent rapture

12)In an impulse turbine
   a) The steam is expanded in fixed & moving blades continuously
   b) The steam is expanded in nozzle only and there is a pressure drop and heat drop
   c) The steam is expanded in moving blades only
   d) The pressure & temperature of steam remains constant

13) Rate of heat transfer is maximum in,
   a) Conduction b) Convection c) Radiation d) All of the above

14) Higher air-flue ratio in gas turbine
   a) Increases power output
   b) Improves thermal efficiency
   c) Reduces exhaust temperature
   d) Prevents damage to turbine blades

15) The purpose of de-aeration of boiler feed water is to
   a) Remove dissolved gases
   b) Remove Scales
   c) Remove Silica
   d) Treat phosphate of feed water

16)The circulation of water in the following boiler is established through an external pump
   a)Forced circulation boiler
   b)Naturally circulated boiler
   c) Externally fired boiler
   d) Internally fired boiler

17) The action of steam in a steam turbine is
   a) Static b) Dynamic c) Static & Dynamic d) Neither static nor Dynamic

18) The chimney draught varies with
   a) Climatic conditions
   b) Temperature of furnace gases
   c) Height of chimney
   d) All of the above

19)During addition of latent heat, the following parameterwill remain constant
a) Pressure b)Temperature c)Volume d) All of the above

20) Pulverized fuel is used for
a) Water tube boilers
b) Less radiation loss
c) More calorific value
d) Better combustion

21) The purpose of condenser in thermal power plant is
a) To create vacuum
b) To convert steam into condensate to reuse again
c) To act a reservoir to receive steam from turbine
d) All of the above

22) Which of the following statement is incorrect
a) Lancashire boiler is fire tube boiler
b) Fire tube boilers are internally fired
c) Babcock & Wilcox boiler is a water tube boiler
d) Cochran boiler is a single tube horizontal boiler.

23) Device used to increase the temperature of saturated steam without increasing its pressure is
a) Economizer b) Steam trap c) Blow off cock d) Super heater

24)The ratio of actual vacuum to the ideal vacuum in a condenser is called
a) Condenser efficiency
b) vacuum efficiency
c) Nozzle efficiency
d) Turbine efficiency

25) The best capable alternative source which can meet future energy demand is
a) Thermal power plant
b) Hydroelectric power plant
c) Geothermal power plant
d) Nuclear power plant

PART - B

II. Write true or false against each statements given below **10 X 1 = 10**

1) STP is the condition of the system at 0°C and 730mmHg.
2) 1 kg of sulphur requires 1 kg of oxygen and produces 2 kg of sulphur dioxide.
3) Economizer decreases the steam raising capacity of a boiler.
4) Absolute pressure= Atmospheric pressure-vacuum pressure.
5) The heating surface of water tube boilers is much more effective than an equivalent area of surface in a fire tube boiler.
6)In a seamless or welded tube or drum under internal pressure, the tendency to split lengthwise is double the tendency to split around
7) The Rankine cycle comprises two isobaric and two isentropic processes.
8)The temperature of condensate is lower on leaving the condenser than that of circulating water.

9)The heat supplied during phase change from liquid to vapour is called latent heat.
10)Dry steam is further heated at constant volume to make superheated steam.

III. Answerany 10 questions from the following **10 X 2 = 20**

1) Explain the term "Dew Point" of air?
2) List and define various modes of heat transfer?
3) Explain the desuperheater and attemperator?
4) List the important qualities of refractory materials?
5) Why the water wall headers not to be blow down when the boiler is in service?
6) List various heat losses in a boiler?
7) How the ash is removed from the boiler?
8) What are the main causes of heavy black smoke in oil fired boilers and why preheating required?
9) In a boiler which safety valve has to blow first; drum or super heater safety valve and why?
10) Explain the term Low temperature corrosion?
11) List four Advantages of pulverized fuel firing?
12) What is PRDS and LMTD?

PART- C

IV. Answerany 5 questions from the following **5 X 4 = 2(**

1) Define Boiler, as per Boiler Act - 1923?
2) Briefly explain thermodynamic equilibrium of a system?
3) Explain briefly about safety valves in a boiler?
4) Explain direct method of boiler efficiency calculation?
5) Explain the "soot blowing" and why it is required ?
6) Explain the terms Foaming, Priming, and Carryover in Boiler system?
7) What is ESP in a boiler define its working philosophy?

V. Answer any 5 questions from the following **5 X 5 =**

1) What is de-aeration? Briefly explain the processes of de-aeration?
2)Write a short note on cooling towers and its classification.
3)List the advantages of air heaters?
4)What is the difference between AFBC & CFBC Boiler?
5) Explain and list out the boiler mountings and accessories?
6) List any 5 comparisons between forced draught &Induced draught?
7)Write a brief note on Economizer and Air Preheater?

No. BOE/ EXAM/KAR/2022

GOVERNMENT OF KARNATAKA

DEPT. OF FACTORIES, BOILERS, INDUSTRIAL SAFETY, AND HEALTH

Boiler Operation Engineer's Examination: 2021-22

Subject: PAPER -3 (DRAWING)

Maximum Marks: 100
Duration : 3 Hours

Instruction to candidates:
1. Answer all the questions
2. Assume suitably missing data, if any
3. FreehandSketch/Drawing would be sufficient

Q.1a Draw the symbols for the following types of valves **10 Marks**

1. Butterfly valve
2. Relief valve
3. Three-way valve
4. Manually Operated Valve
5. Gate Valve

1b Draw the symbol of the following **10 Marks**

1. Square groove weld
2. Bevel groove weld
3. Fillet weld
4. Spot weld
5. J groove weld

Q.2 Name the following Steam System Symbols **20 Marks**

A 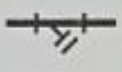

B 

C 

D 

E 

F 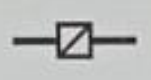

G 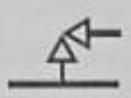

H 

I 

J 

Q.3 Draw the schematic freehand sketch of the following and name the different parts **20 Marks**

1. Spring-loaded Safety Valve
2. Steam Stop Valve

Q.4 **A pictorial view of an object is shown in Figure 1. Use the first angle method and draw the following views (Indicate all essential dimensions)** **20 Marks**

1.Front View
2.Top View
3.Side View

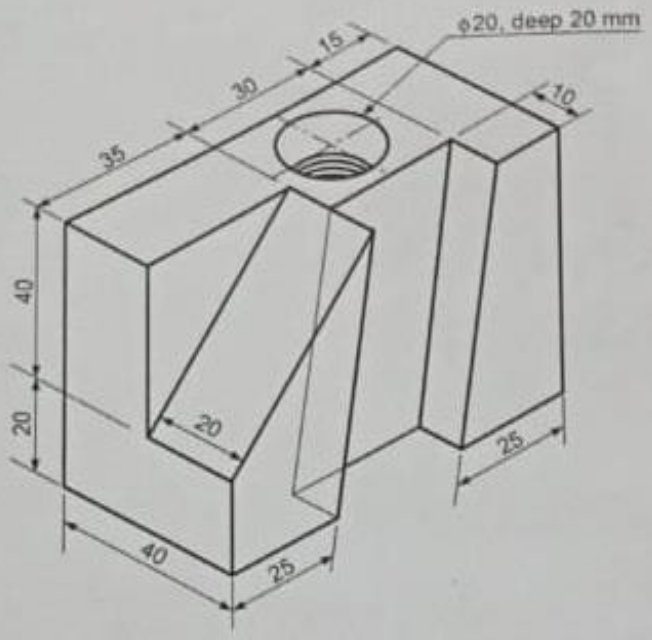

FIGURE 1.

Q.5 **Draw neat freehand sketches with labelling for any two of the following** **20 Marks**

1. Details of the feed water regulation station arrangement in a steam boiler system
2. Details of the Boiler Steam drum with all mountings and internals.
3. Details of the Forced circulation circuit of the boiler.