Study Material For Boiler Operation Engineer (BOE) Exams

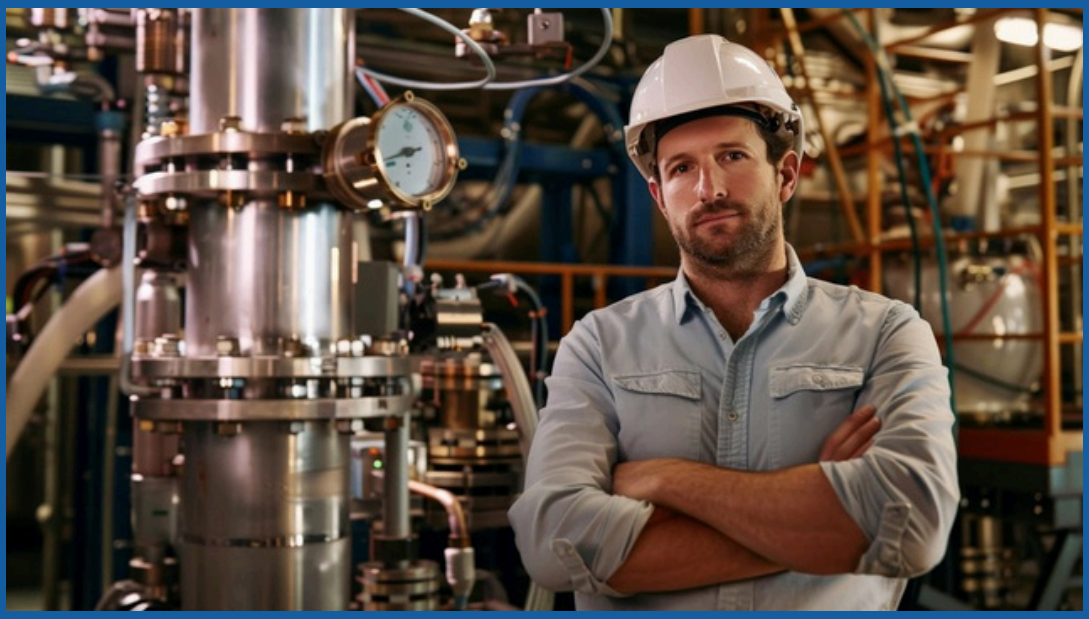

Theory, Numerical Problems, MCQs and Boiler Drawing Problems from BOE Exams

Amazon Flipkart Pothi

PROENGR.IN

SUDESH K JAIN

JHARKHNAD BOILER OPERATION ENGINEER EXAMINATION-2024
PAPER-1(BOILER ENGINEERING-1)

Time: 3.00 Hours **Max. Marks: 100**

Instructions to Candidates:

1. SECTION-1The question paper is divided in to two sections.
2. Attempt all the question in each sections.
3. Answer in brief and to the point.
4. Draw neat sketches, wherever necessary.
5. Carrying Mobile phones inside examination hall is strictly prohibited.

SECTION-1

Q.1: Answer all the questions & choose the right answer: **[1x10=10]**

1: The steam temperature with increase in load in case of a boiler fitted with radiant super-heater.

(a) Increase

(b) Decrease

(c) 1st increase & then decreases

(d) No changes

2: A wet vapour can be completely specified by

(a) Pressure only

(b) Temperature only

(c) Dryness Fraction only

(d) Pressure and dryness fraction

3: The difference between DBT and WBT in a cooling tower is called as

(a) Wet bulb depression

(b) Dry bulb depression

(c) Dew point depression

(d) None of above

4: The shell diameter and length of locomotive boiler are

(a) 1.5m, 4m

(b) 1.5m, 6m

(c) 1m, 4m

(d) 2m, 4m

5: In recuperative air pre-heater, the heat is transferred

(a) From heating an intermediate material and then heating the air from this material

(b) From a metal wall of one medium to another

(c) By direct mixing

(d) Heat is transferred by bleeding some gases from furnace

6: In an oil fired steam boiler the air to fuel ratio by mass is 15:1 & evaporation ratio is 14:1. The flue gas to fuel ratio will be

(a) 15:1

(b) 16:1

(c) 1:1

(d) 29:1

7: Identify the correct statement regarding the Electrostatic precipitator

(a) Minimum particle size removal is < 0.5pm

(b) They can be operated at high temperature

(c) It has a low maintenance cost

(d) It does not causes any freezing problem

8: Which of the following group of devices are used for part recovery of heat from the flue gases leaving the tube banks in a water tube boilers?

(a) Drum internals, Super-heater, Economizer

(b) Economizer, Air-preheater, Electrostatic precipitator

(c) Super-heater, Economizer, Air-preheater

(d) Water wall, Drum internals, super-heater

9: The stack height requirement of a plant having generation capacity equal or more than 200/210MW but less than 500MW is

(a) 180m

(b) 220m

(c) 250m

(d) 275m

10: “Heat loss = Heat Gain” is the principle of

(a) Principle of thermal equilibrium

(b) Principle of coolers

(c) Principle of calorimetry

(d) Principle of vaporization

Q.2: Fill in the blanks: **[2x10=20]**

1. Fyrite is used to measure ____ & ____ from boiler stack.
2. The boiling point of water is ____ ^{0}F & the critical point of steam generation

in once through boiler is ____ bar.

3. High steam and low water safety valve is not suitable for ____ & ____ engines.
4. Cornish boiler has ____ flue tube whereas Lancashire boiler has ____ flue tubes.
5. The actual vacuum in a condenser is equal to difference between ____ and ____
6. The quantity of boiler mountings such as ……..&..... are kept as more than one.
7. In a Cooling Tower "Approach" is the temperature difference between ____ & ____
8. Particulate matter and Mercury requirement for TPP (units) to be installed from 1st January 2017 are ____ mg/Nm^3 & ____ mg/Nm^3 respectively.
9. ____ and ____ point occur after the proportionally limit & yield limit respectively on the stress strain curve.
10. If the precipitate formed is soft, loose and slimy, these are called as ____ and if the precipitate is hard and adhering on the inner wall, these are called as ____

Q.3: Write full form of following abbreviation: [5x2=10]

1. ECR (Boiler burner concern)
2. MCR (Boiler Burner Concern)
3. SAE
4. SOFA
5. BPVC
6. COC
7. FSSS
8. HRSG
9. AVT
10. FAC

Q.4: Answer the following question: [10x3=30]

Q.4(i)a: Tell three advantages of low NOx burners?
Q.4(i)b: Why down comers are possessed fewer in numbers while risers more in numbers?
Q.4(ii)a: Calculate the temporary & permanent hardness of water sample whose analysis are as follows: $Ca(HCO_3)_2$=40.5ppm, $Mg(HCO_3)_2$=30.0ppm, $CaSO_4$=34ppm , $CaCl_2$=27.75ppm, $MgSO_4$=30ppm, SiO_2=3.5ppm & $MgCl_2$=10ppm.
Q.4(ii)b: What is Flocculation in water treatment?
Q.4(iii)a: What is revo-steam (water tube coil type) boiler?
Q.4(iii)b: Tell its three advantages.
Q.4(iv): A coal fired Boiler's fly ash collected at APH & analyzed for unburnt. Reports show 25% of unburnt & 750kcal/kg GCV. Calculate the heat loss due to this unburnt. Consider coal GCV 4700kcal/kg & ash percentage in coal 6%.
Q.4(v)a: What is mud drum in boiler?
Q.4(v)b: What is Chemical Oxygen Demand(COD).
Q.4(v)c: What is sagging in boiler beam?
Q.4(vi)a: What are the constituents measured by proximate analysis?
Q.4(vi)b: Explain in brief about their measurement.
Q.4(vii)a: How the air ingress affects on ESP performance?
Q.4(vii)b: What do you mean by Aspect ratio? How does it affect on dust collection?
Q.4(viii)a: What is clinker?
Q.4(viii)b: List three factors which lead to clinker formation in case of stationary grate coal fired boiler.
Q.4(ix)a: What are the three disadvantages of air pre-heater?
Q.4(ix)b: Define stagnation pressure and absolute pressure.

Q.4(x)a: Explain briefly about SCR(Selective Catalytic Reduction) and SNCR(Selective Non Catalytic Reduction).
Q.4(x)b: Explain briefly about working principle of Bowl Mill.

SECTION-2

Q.5: Answer all following question: **[5x6=30]**

Q.5(i)a: Test data show the following gas analysis before and after the air pre-heater.

Name of the flue gas	Entering	Leaving
CO_2	9.7	9.2
O_2	4.0	4.9
N_2	86.3	85.9

The coal used shows a carbon percentage of 72% by mass. Estimate the air leakage into the air pre-heater per kg of coal fired.
Q.5(i)b: For a mercury steam Sulphur dioxide cycle, the heat rejected in mercury cycle is given to the steam cycle and the heat ejected in the steam cycle is utilized in the SO_2 cycle. If the efficiencies on the mercury, steam and SO_2 cycles are 0.5, 0.4 and 0.25 respectively. Find the overall efficiency of the composite cycle.
Q.5(ii): A textile factory has a battery of 6 Lancashire boiler, each supplying 6TPH of steam at 16bar, 250*C from feed water at 30*C. The boilers burn fuel oil of calorific value of 43.96MJ/kg with an overall efficiency of 75%. For efficient combustion 16kg of air per kg fuel is required for which a draught of 20mm of water gauge is required at the base of chimney. The flue gases leave the boilers at 320*C. The average temperature of the gases in the stack may be taken to be 300*C. The Atmosphere is at 30*C.
Assuming the velocity of gases at stack exit to be negligible, determine the height of the stack and diameter at its base.
(The superheated enthalpy is 2919.2KJ/kg enthalpy at 30*C is 125.79KJ/Kg).
Q.5(iii): Steam leaves the drum of a boiler at the rate of 64kg/sec at 60bar, with 2% moisture. The feed water from the economizer enters the drum at the rate of 62kg/sec and has 3ppm. The makeup water at the rate of 2kg/sec is fed into the drum and it has 50ppm. Effective steam washing reduces the solids in the moisture, leaving the drum with steam to 5ppm. If the solid concentration in the drum water is to be maintained at 1000ppm, find:
(a) the blow down required in kg/sec.
(b) heat loss in blow down as a percentage of total heat released in the furnace, if blow down heat recovery is not used, when the fuel burning rate is 7kg/sec and its heating value 23MJ/kg and
(c) The deposition of scale in super heater tube in kg/day.
Take the room temperature at 30*C.
(The Enthalpy at 60bar is 1213.35KJ/kg and Enthalpy at 30*C is 125.73KJ/kg.)
Q.5(iv)a: Write four differences between column and strut.
Q.5(iv)b: A solid round bar 3m long 5cm in diameter is used as a strut with both ends hinged. Determine the crippling load. Take $E=2x10^5 N/mm^2$.
Q.5(v): Make a neat sketch of Benson boiler with showing its main parts. What are its main five advantages?

JHARKHAND BOILER OPERATION ENGINEER EXAMINATION-2024
PAPER-2(BOILER ENGINEERING-2)

Time: 3.00 Hours **Max. Marks: 100**

Instructions to Candidates:

1. The question paper is divided in to two sections.
2. Attempt all the question in both sections.
3. Answer in brief and to the point.
4. Draw neat sketches, wherever necessary.
5. Carrying Mobile phones inside examination hall is strictly prohibited.

SECTION-1

Q.1: Answer all the questions & choose the right answer: **[1x10=10]**

1: Which of these techniques (Yoke Techniques, Bods Techniques, Coil Techniques, Central conductor) are related to magnetic particle testing?
(a) 1,2 and 3 only.
(b) 1,2 and 4 only.
(c) 2, 3 and 4 only.
(d) 1, 2, 3 and 4.

2: The electric light used for work inside boiler shell, the voltage should not exceed
(a) 12 volts
(b) 24 volts
(c) 240 volts
(d) 250 volts

3: IQI is the term related with
(a) Radiography Testing
(b) DP Testing
(c) Ultrasonic Testing
(d) Magnetic Particle Inspection

4: Boiler pressure gauge shall not be less than
(a) 50mm in diameter
(b) 100mm in diameter
(c) 150mm in diameter
(d) 250mm in diameter

5: Argon purging is required while welding following grade of material
(a) SA 106 Gr B
(b) Carbon steel
(c) Stainless steel
(d) None of above

6: Which alloying element is used to improve the strength of steel at elevated temperature?
(a) Tungsten
(b) Zinc
(c) Aluminium
(d) Copper

7: YGP index of coal indicates

(a) Hardness
(b) Abrasiveness
(c) Moisture content
(d) None

8: In a AFBC Boiler the size of coal used is
(a) 1-10mm
(b) 10-100mm
(c) Less than 1mm
(d) 10-20 inches

9: A buck stay is
(a) Used to hang boiler drum
(b) Bottom support for boiler
(c) Used to hang water wall
(d) Support for furnace walls

10: Which of following phase will be resulted when the transformation temperature of steel is more than 750^0C?
(a) Austenite
(b) Pearlite
(c) Bainite
(d) Martensite

Q.2: Fill in the blanks: **[2x10=20]**

1. The latent heat addition and Blow down loss of supercritical boiler in comparative to Subcritical boiler are ____ & ____ respectively.
2. T91 steel is modified to T92 steel by addition of alloying elements&
3. Type of IBR certificates needed for pressure part items and Boiler mounting & fitting are from ____ and ____respectively.
4. High temperature stress rupture and oxidation resistance can be increased by alloying additives of ____ and ____
5. The concentration of Hydrazine or Sodium sulphite for Wet preservation boilers are maintained as ____ & ____
6. In cooling tower, formulate the cycle of concentration and blow down loss ____
7. A condenser in a steam power plant ____ (increase/decrease) expansion ratio of steam while ____ (increase/decrease) back pressure of steam.
8. Water vapours can be absorbed by ____ and adsorbed by ____
9. As per fan affinity law, the ratio of flow and speed is while the ratio of pressure and speed is ____
10. The disadvantages of using biomass pellets in thermal power plant are ____ & ____

Q.3((a): Convert it: **[1x5=5]**

1. 1 bar = ____ torr.
2. 860 kilocalorie = ____ Btu.
3. 1 metric hp = ____ Watt.
4. 1 mm WC = ____ Pascal.
5. 1*C = ____ ^{0}F.

Q.3((b): State whether the following statements are TRUE or FALSE. **[1x5=5]**

1. The trade name of tube material $2^{1/4}$ Chrome is T91.
2. The area under the temperature-entropy curve of any thermodynamic process represents either heat absorbed or heat rejected.
3. Bomb calorimeter is used to determine low calorific value at constant pressure.

4. Pilling is term associated with foundation in boiler.
5. More sulphur content in a fuel means less height of chimney is required.

Q.4: Answer the following question: [10x3=30]

Q.4(i): Enumerate the four locations where energy conservation is possible in the power plant.
Q.4(ii)a: Mention types of three Lifts provide in safety valve of boiler?
Q.4(ii)b: Give two reasons to prefer backward vanes in fans.
Q.4(iii): What is FSS(Flame Safety System)?
Q.4(iv): Write about: ((a) Nucleate Boiling ((b) Film Boiling.
Q.4(v): What are the three advantages of Over-bed feed system in FBC boilers? Write any two limitations of this system.
Q.4(vi): In a 500MW unit, coal of 4000kcal/kg GCV is fired. The unburnt in bottom ash is 2.8% and in fly ash is 0.4%. If the ash content in coal is 36%. Calculate the amount of loss due to combustible in ash in terms of kcal/kg coal fired. (The GCV of carbon may be taken as 8130 kcal/kg and the ratio of bottom ash to fly ash to fly ash collected is 15:85)?
Q.4(vii)a: What are the main three causes responsible to SCC (Stress Corrosion Cracking) in stainless Steel.
Q.4(vii)b: What is Hydrogen embrittlement? Which inspection is mostly done to determine it?
Q.4(viii): An Electro-static precipitator(ESP) with 5600m^2 of collector plate area is 96% efficient in treating 185m^3/sec of flue gas from 200MW thermal power plant. It was found that in order to achieve 97% efficiency, the collector plate area should be 6100m^2. What would be ESP collector plate area(m^2) in order to increase the efficiency to 99%.
Q.4(ix): What is a Combi boiler? Tell its three advantages.
Q.4(x): What are constituents, temperature range, grade of the SA210 Gr A1, SA213 T11 tube material?

SECTION-2

Q.5: Answer the following questions. [5x6=30]

Q.5(i)a: For detection of surface weld defects or discontinuities, what are the NDT methods commonly used?
Q.5(i)b: What is the basic principle of Radiographic testing of NDT? Write three advantages and three disadvantages of it.
Q.5(ii)a: What do you understand by recycle ratio in FBC boiler?
Q.5(ii)b: Describe reaction that involves SOx absorption in FBC boiler with lime as sorbent.
Q.5(iii): Propane Gas is reacted with air in such as ratio that an analysis of the dry products of combustion gives CO_2-11.5%, O_2-2.7% and CO-0.7%. What is the percentage excess air used?
Q.5(iv): A spray type desuperheater is supplied with water at 60*C. It is connected in a steam line carrying 200TPH of steam at 35bar. Calculate the amount of water that must be sprayed per hour to maintain steam at 400*C. When boiler load causes steam to leave at 450*C. Enthalpy at 60*C, 400*C, 450*C at given pressure are taken as 252KJ/kg, 3222.3KJ/kg & 3337.2KJ/kg respectively.
Q.5(v): A boiler an output at 80kg/sec of steam at pressure of 100kg/cm^2 and 500*C temperature has an efficiency of 85% and it operates at full load, Performance evaluation input data is given below:
Feed water enters at the boiler at 160*C.
Calorific value of coal = 4600 kcal/kg.
Sulphur content of coal = 0.35%.
Ash content of coal = 40%.
Efficiency of ESP and ash collection system = 99.5%.
Enthalpy = 808 kcal/kg at 100kg/cm^2 and 500^{0}C

Based on given data calculate:

1. SO_2 emission through stack in kg/hr.
2. Particular emission through stack in kg/hr.

JHANRKHAND BOILER OPERATION ENGINEER EXAMINATION-2024
PAPER-3 (ENGINEERING DRAWING)

Time: 3.00 Hours **Max. Marks: 100**

Instructions to Candidates:

1. Answer all the questions.
2. Carrying Mobile Phones inside examination hall is strictly prohibited.

Q.1: State whether the following statements are TRUE or FALSE. [5x1=5]

I. Spring washer is used to hold the lock nut in place.
II. Grooved nut has a upper portion in hexagonal and lower portion in cylindrical shape.
III. The Jig does not guide the tools.
IV. Snap gauge is used to determine clearance or gap between components.
V. Basic hole is that in which lower deviation is zero.

Q.2: Choose the correct option. [10x1=10]

1. What is the width of the cotter used in cotter joint connecting two rods subjected to axial load of 50kN and permissible shear stress in cotter is 50N/mm^2. Given thickness of cotter is 10mm.
   (a) 30mm (b) 40mm (c) 50mm (d) 80mm
2. Which of the following statement is true for dial indicators?
   (a) It can be used as a direct measuring instrument.
   (b) It can only used be used as a comparator.
   (c) There is no effect on accuracy if the surface of contact point worn out.
   (d) Test for repeatability is done only once at the starting.
3. Which of the following is not true for hole and shaft basis system?
   (a) Hole basis system is generally preferred over shaft basis system.
   (b) Shaft basis system can be used when products are made from bright drawn bars.
   (c) Choice of the system depends upon nature of the product.
   (d) In hole basis system allowances are applied to the hole.
4. Which screw thread profile is the combination of square and V-thread?
   (a) Buttress Thread (b) ACME Thread
   (c) British Standard Whitworth Thread (d) British Standard Fine.
5. Which of the following are perspective drawing, axonometric drawing, oblique following respectively?
   1. Cabinet, Cavalier, Clirographic 2. Isometric, diameter, trimetric
   3. One point, two point, three point 4. None of the above
   (a) 1-3-4 (b) 3-1-2 (c) 2-1-3 (d) 3-2-1
6. If the tearing efficiency of a riveted joint is 50%, then ratio of diameter of rivet hole to the pitch of rivets is
   (a) 0.20 (b) 0.30 (c) 0.50 (d) 0.060
7. Spliners are used if
   (a) The power to be transmitted is high (b) The torque to be transmitted is high
   (c) The speed is high (d) There is relative motion between shaft and hub
8. The maximum interference in mm after assembly between a bush of size $30^{+0.06}_{+0.03}$ mm and shaft of size $30^{+0.04}_{+0.02}$ mm is
   (a) 0.04 (b) 0.03 (c) 0.02 (d) 0.01
9. Which is wrong one in the following?
   (a) Box method is used to draw isometric view of Pyramid, Prism, Cylinder.
   (b) Isometric view of rectangle is a rhombus.
   (c) 4-center method is used to draw isometric view of a circle.
   (d) Exact method is used to construct isometric projection.
10. What are the three principal planes in orthographic projection?

(a) Back, Top, Profile
(b) Frontal, Horizontal, Profile
(c) Top, Front, Left Side
(d) Front, Top, Profile

Q.3: Solve the problems. **[5x3=15]**

Q.3(i): A safety valve is designed to blow off a gauge pressure of 0.8N/mm^2. The valve is held by a close coiled helical spring of mean coil diameter 180mm and valve disc diameter is 80mm. Find the diameter of spring if shear stress of rod is 75N/mm^2?.

Q.3(ii): A shaft of 50mm diameter transmits a torque of 800N-m, The width of the rectangular key used is 10mm. The allowable shear stress of the material of the key being 40MPa. What is the required length of the key?

Q.3(iii): In an arc welding process, the voltage & current are 25V & 300A respectively. The arc heat transfer efficiency is 0.85 and welding speed is 8mm/sec. What is the net heat input (J/mm)?

Q.3(iv): Mention the following:

(a) Three types of Sunk Key
(b) Three types of Flexible coupling.
(c) Three types of Drawing

Q.3(v): Explain in brief:

(a) Missing view
(b) Hidden line
(c) Buck-stay

Q.4: Draw the symbols for the following: **[5x2=10]**

(a) Steam Trap
(b) Y-type strainer
(c) Two way valve fail open
(d) Eccentric reducer
(e) Spring loaded check valve

Q.5: Draw front view, side view and top view in 3rd angle projection of the given object in Figure No-1. **[3x5=15]**

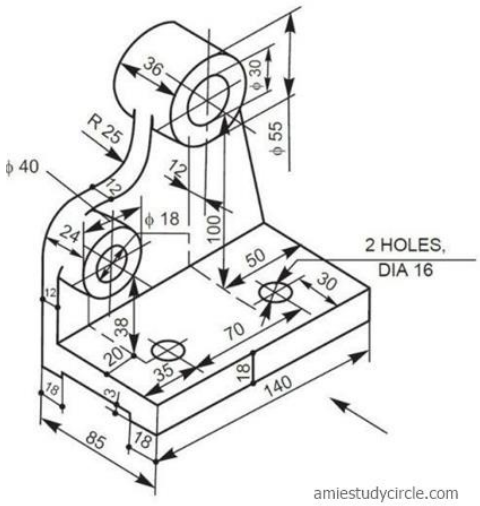

Figure No-1

Q.6: Orthographic view of one object are given in Figure No-2 in which a line or lines or a view may be missing. Draw Isometric view of this object. **[10x1=10]**

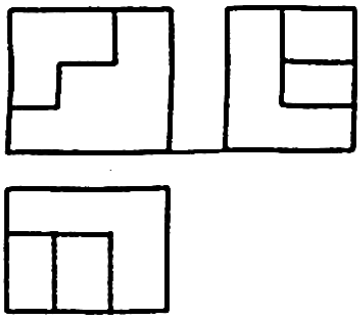

Figure 2

Q.7(i): Draw to scale 1.1 the front view and top view of hexagonal nut with vertical axis (diameter 20mm). Give standard dimensions. [10]

Q.7(ii): Give the following answer in Figure No-3. [5]

a) Write the value of x,y and z in terms of d as d is diameter of rivet.
b) What represents p and q?
c) Which type is welds the figure represent?

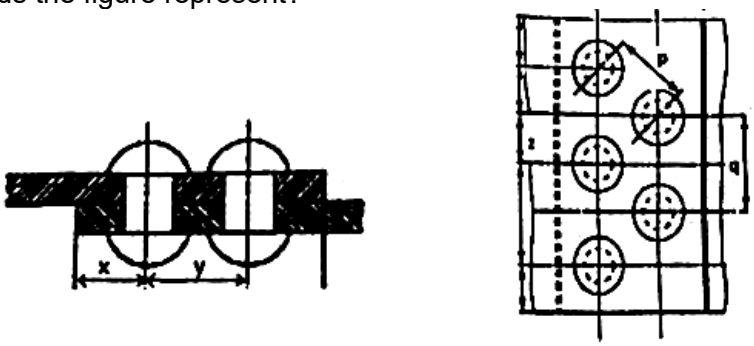

Figure 3

Q.8: The view from the front and top of pump housing is given in Figure No-4. Given the answer of the following question? [10x2=20]

a) What is the overall size of the housing?
b) What is the gasket size required for the top surface?
c) There are 4 tapped holes on the top. What is the size of the tap?
d) What is the size of the opening at the top?
e) What is the diameter of the gasket required for the front cover?
f) What is the corner radius to the top flange?
g) What is slope of the recess in the housing base?
h) What are the other dimensions of the recess?
i) What is the width and thickness of the base?
j) What is the width of the rib marked “X”?

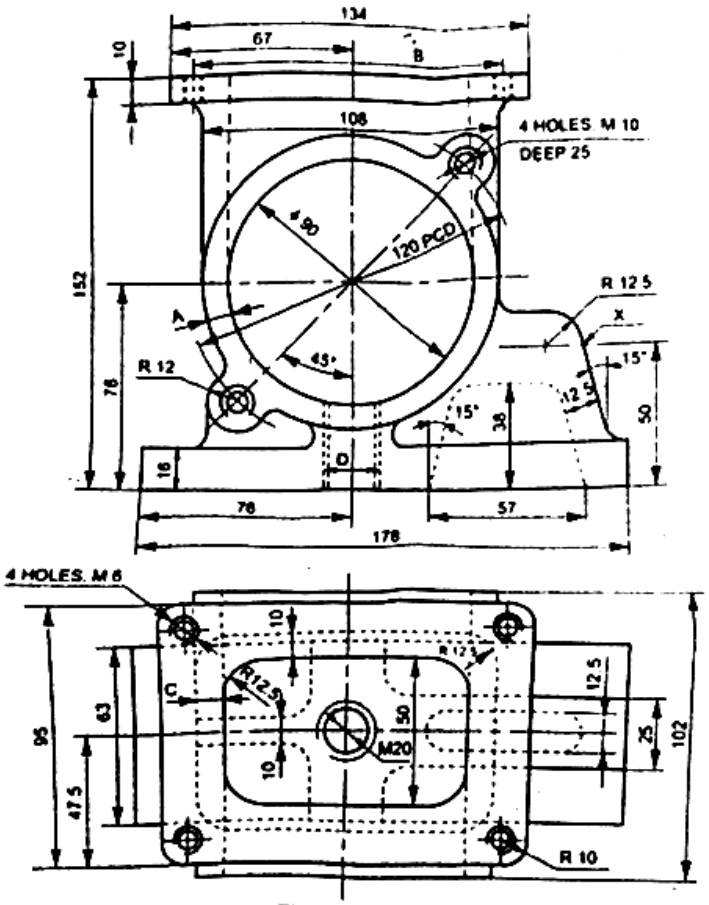
134
67
B
10
108
4 HOLES M 10
DEEP 25
ϕ 90
120 PCD
152
R 12.5
X
A
45°
R 12
15°
12.5
76
15°
38
50
16
D
76
57
178
4 HOLES. M 6
10
R 12.5
C
R12.5
50
M20
10
12.5
25
102
95
63
47.5
R 10

Figure No. 4