Study Material For Boiler Operation Engineer (BOE) Exams

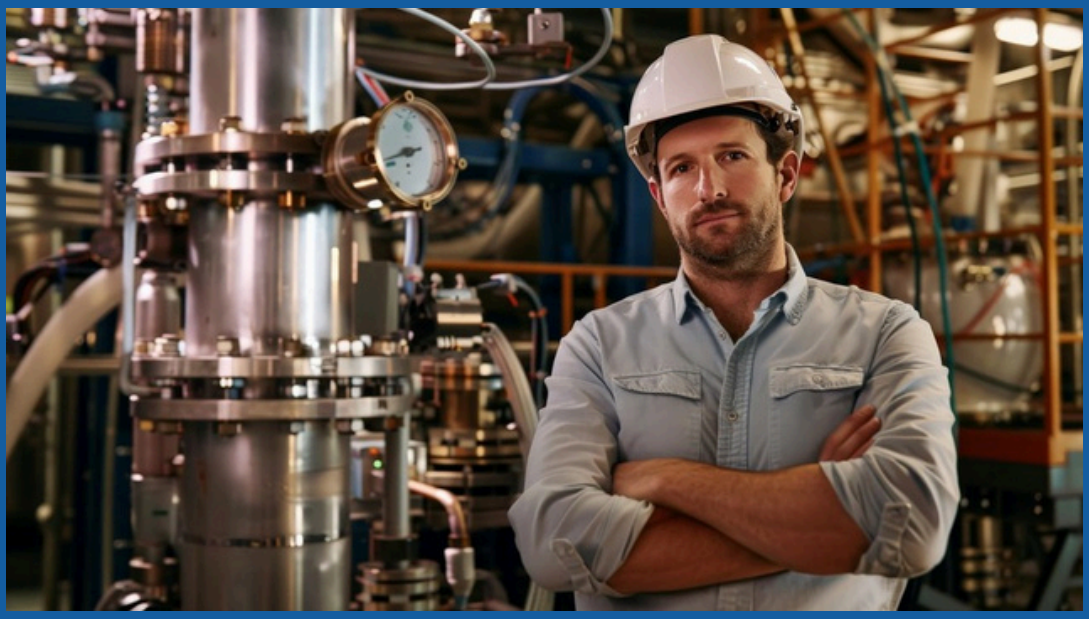

Theory, Numerical Problems, MCQs and Boiler Drawing Problems from BOE Exams

Amazon Flipkart Pothi

PROENGR.IN

SUDESH K JAIN

JH/BOE/001/SEPTEMBER -2022

EXAMINATION BOARD OF BOILERS

(JHARKHAND STATE)

(Under The Boiler Operation Engineer's Rule, 2011 and its amendment)

Boiler Technology : Paper-I

Time : 3 Hours | Maximum Marks : 100

Notes :
(1) The question paper is divided in to two sections.
(2) Attempt all the questions of both the sections.
(3) Answer in brief and to the point.
(4) Draw neat sketches, wherever necessary.

SECTION - 1

Answer all the questions

Total Marks : 10 X1=10

1. Choose the right answer :-

(i) The largest Thermal Power Plant of India
(a) Mundra Thermal Power Station, Gujarat
(b) Vindhyachal Thermal Power Plant, Madhya Pradesh
(c) Sasan Ultra Mega Power Plant, Madhya Pradesh
(d) Tiroda Thermal Power Plant, Maharashtra

(ii) The use of tertiary air is
(a) to provide air around burners for obtaining optimum combustion
(b) to transport and dry coal
(c) to cool the scanners
(d) convert CO (formed in lower zone of furnace) in to CO_2 at higher zone

(iii) Duplex feed pump are used in steam boilers. These pump operate on the principle of
(a) centrifugal pump (b) axial flow pump
(c) gear pump (d) reciprocating pump

(iv) The diameter of fire tube of Cornish boiler compared to its shell is
(a) One half (b) One third
(c) One fourth (d) One fifth

(v) The coal requirement per kw hour generation in the thermal power plant is of the order of
(a) 0.1 to 0.2 kg (b) 1.0 to 1.5 kg
(c) 0.6 to 0.8 kg (d) 0.2 to 0.4 kg

(vi) The furnace is situated outside the boiler shell in case of a
(a) locomotive boiler (b) cocharan boiler
(c) babcock and Wilcox boiler (d) cornish boiler

(vii) The 100 mesh size means
(a) 100 openings per inch (b) 100 openings per cm
(c) 100 openings per mm (d) 100 openings per m

(viii) The Reg. 391A of IBR 1950 relates with
  (a) hydraulic test of boilers for registration
  (b) aging of boilers
  (c) submission of manufacturing drawings and particulars of boilers in advance
  (d) design of stand pipe etc.

(ix) Chromatography analyzer is used to measure the
  (a) oxygen in flue gas
  (b) carbon dioxide in flue gas
  (c) amount of individual gases in flue gas
  (d) sulphur dioxide in flue gas

(x) Which of the following should not be a composition of boiler-feed water
  (a) Hardness should be below 0.2 ppm
  (b) Its caustic alkalinity should lie between 0.15 to 0.45 ppm
  (c) Its soda alkalinity should be 0.45-1 ppm
  (d) Its caustic alkalinity should lie between 1.5-2 ppm

2. Fill in the blanks :- **Total Marks : 10 X2=20**

(i) The value of particulate matter (PM) for the Thermal Power Plants installed before 31st Dec'2003 & after 1st Jan'2017 are.....mg/ Nm^3 & .....mg/ Nm^3 respectively.

(ii) As per IUPAC, the STP and NTP value of temperature (°C) of gas are..... &.....respectively.

(iii) If the mill designated capacity is BBD3448, so the diameter and length of ball mill shell are.....m &.....m respectively.

(iv) Mobrey switch and Spectrophotometer are used to measure for .....&.....respectively.

(v) The main constituents of fly ash are .....&.....

(vi) The calorific value of LD Converter gas & Blast furnace gas are.....&.....respectively.

(vii) Trisodium phosphate and Hydrazine are generally used for dozing in boiler system to remove .....&..... respectively.

(viii) Coal is heated in presence of air to temperature of about.....determining its ash contend for proximate analysis.

(ix) The two disadvantage of FBC boilers are.....&.....

(x) A supercritical boiler is one that operates above the pressure and temperature of.....& ..... respectively.

3. State whether the following statements are True or False :- **Total Marks : 10 X1=10**

(i) Sludge is formed generally at heated portions of the boiler.

(ii) Phosphorus availability decreases with increase in pH.

(iii) Colloidal silica is in polymeric form of silicon whereas reactive silica is the non-polymeric form of silicon .

(iv) Ultimate analysis of the coal is the basis for Seylor's coal classification.

(v) The mechanical draught increases with the amount of smoke.

(vi) Threshold speed is the minimum speed at which ball mill operates.

(vii) An ideal gas as compared to a real gas at very high pressure occupies less volume.

(viii) The specific volume of water when heated from 0^0C , first increases then decreases.

(ix) Evaporative type of condenser has steam in pipes surrounded by water.

(x) With increase in the percentage of excess air for combustion of coal, percentage of CO_2 in flue gas decreases.

4. Answer the following questions:- **Total Marks : 10 X3=30**

(i) In a power plant, the efficiencies of the electric generator, turbine, boiler, thermodynamic cycle and overall plant are 0.97, 0.95, 0.92, 0.42 and 0.33 respectively. How much will total electricity generated for running the auxiliaries ? **Marks: 3**

(ii) What is the basic formula to determine efficiency of electrostatic precipitator? What do you mean by spark rate in ESP? Tell the average value of spark rate for its optimum operation? **Marks: 3x1**

(iii) Difference between the following in brief **Marks: 2x1.5**

(a) Steam boiler and Steam generator

(b) Absorption and Adsorption

(iv) (a) What is mean by 5:1 boiler turndown ratio? **Marks: 3x1**

(b) What is mean by 5:1 circulation ratio of boiler?

(c) What is mean by 5:1 evaporation ratio of boiler?

(v) A boiler is having a chimney of 35m height. The draught produced in terms of water column is 20 mm. The temperature of flue gas inside the chimney is 365^0C and that of air outside the chimney is 32^0C. What is the mass of air used in it? **Marks: 3**

(vi) For a cooling tower, the TDS of cooling water and make up water are 1500 ppm & 250 ppm respectively. If evaporation loss is 2% with windage loss negligible. Calculate COC (Cycles of concentration) & blow down percentage. **Marks: 2x1.5**

(vii) Name any three boiler protection to safeguard the boiler during operation? **Marks: 3x1**

(viii) (a) What is steam coil air preheater? **Marks: 2X1.5**

(b) Differentiate between recuperative type air preheater and regenerative type air preheater on basis of power consumption, pressure drop for both air & flue gas, space requirement.

(ix) The efficiency of a boiler on GCV basis is 85%. The fuel contains 1.0% moisture and 12% hydrogen. The GCV of a fuel is 10500 kcal/kg. What is the boiler efficiency on the basis of net calorific value? **Marks: 3**

(x) A coal having CV 3500 kcal/kg is supplied to power station. The boiler, turbine and generator efficiency are 83%, 32%, 97% respectively. If the coal consumption of the power station is30 T/hr. Determine the capacity of power plant in MW. **Marks:3**

SECTION-2

Total Marks : 5 X6=30

5. Answer the following questions :-

(i) What is proof stress? Explain it with the help of stress-strain diagram. **Marks: 3+3**

A hollow shaft is to transmit 300kW at 80rpm. If shear stress is not to exceed 60 N/mm2 and internal diameter is 0.6 of the external diameter, find external and internal diameters assuming maximum torque is 1.4 times the mean torque.

(ii) (a) What is ejector condenser? **Marks: 2+2+2**

(b) Two identical oil fired boilers of capacity 100 TPH are operated in a refinery. They have a full load efficiency of 90%. The part load efficiencies at 70% and 40% load are 70% and 60% respectively. For meeting 140 TPH requirement of steam, which one of the case would you prefer to run and estimate the % savings in the preferred case. The enthalpy of steam generated is 550 Kcal/kg and feed water enters the boiler at 50°C in all the cases. Calorific value of the fuel oil is 10,000 Kcal/hr.

Case 1: both the boilers operated at 70 TPH capacity each.

Case 2: one at full load capacity and other at 40% capacity.

(iii) Following reading are noted from a 55MW coal feed thermal power plant. **Marks: 6**

1. steam generation in the boiler-210TPH
2. steam pressure -100 kg/cm2
3. steam temperature-520°C
4. Boiler feed pump load-1.8MW
5. coal consumption-1200 ton per day
6. GCV of coal used-3500 kcal/kg
7. feed water temperature at boiler inlet-140°C If steam and feed water loss in the system is negligible, calculate-
   (a) Gross turbine heat rate
   (b) Net turbine heat rate
   (c) Boiler efficiency
   (d) evaporation ratio
   (e) specific steam consumption
   (f) specific coal consumption

Enthalpy of steam at 100 kg/cm² at 520°C is 3424 kJ/kg

(iv) (a) What is flue gas desulfurization system? **Marks: 2+4**

(b) Explain wet type FGD system with a diagram and chemical reactions.

(v) (a) Feed water is provided to a boiler from the feed water tank at 60°C, temperature of condensate water returning to the tank is 80°C and temperature of make up water is 27°C. What is the amount of condensate recovered ? **Marks: 4+2**

(b) The safety valve of a boiler is set at 42 kg/cm2. During testing, it is found that the valve lifts at 45kg/cm2 and reset at 39.5 kg/cm2. Calculate (i) over pressure (ii) percentage blow down.

***

JH/BOE/001/SEPTEMBER -2022

EXAMINATION BOARD OF BOILERS

(JHARKHAND STATE)

(Under The Boiler Operation Engineer's Rule, 2011 and its amendment)

Boiler Technology : Paper-II

Time : 3 Hours

Maximum Marks : 100

Notes :
(1) The question paper is divided in to two sections.
(2) Attempt all the questions of both the sections.
(3) Answer in brief and to the point.
(4) Draw neat sketches, wherever necessary.

SECTION - 1

Answer all the questions **Total Marks : 10 X1=10**

1. Choose the right answer :-

(i) Ostwald charts are meant for
(a) computing the excess/deficiency of combustion air
(b) calculation of flue gas temperature
(c) computation of flue gas analysis
(d) computation of stack loss

(ii) In Industrial applications, the type of trap used for main steam lines is
(a) thermodynamic (b) thermostatic
(c) bimetallic (d) float

(iii) The recommended TDS level in boiler drum that can be safely maintained for the water tube boiler is
(a) 3000-3500 ppm (b) 2000 ppm
(c) 5000 ppm (d) 1500

(iv) .....acts as deoxidizer in steel making process.
(a) vanadium (b) niobium
(c) sulphur (d) aluminium

(v) Arrange the following fuels by their GCV in decreasing order (p) Rice husk (q) Diesel (r) Grade-C Coal (s) Hydrogen
(a) s-q-r-p (b) p-q-r-s
(c) r-s-q-p (d) q-r-s-p

(vi) What will happen when alum is mixed with water as coagulant?
(a) Increase pH Value of water. (b) Decrease pH Value of water.
(c) Does not affect pH Value of water. (d) None of these

(vii) Controlled wetting of coal (during the coal preparation) would result in
(a) Reduction in flue gas exit temperature (b) Improper combustion
(c) Increase in fines of coal (d) Decrease in the percentage of unburnt carbon

P.T.O.

(viii) Long term overheating of tube exhibits

(a) Bulging

(b) Transverse cracks

(c) Thick lip longitudinal rupture

(d) Severe pitting

(ix) For the operating point the pump, a system characteristic between the head required 'H' and the discharged to be maintained 'Q' is

(a) Linear equation

(b) Parabolic equation

(c) Exponential equation

(d) Cubic equation

(x) Which is not true for wet preservation of boiler?

(a) required in stand by condition for quick demand of steam

(b) not used in cold environment minus zero temperature

(c) hydrazine (200 ppm) dozed with water to remove dissolved oxygen

(d) maintains relative humidity less than 50%

2. Fill in the blanks :- **Total Marks : 10 X2=20**

(i) Pipe size is specified with two non-dimensional numbers.....&.....

(ii) The SI unit of kinematic viscosity & dynamic viscosity are.....& .....respectively.

(iii) In case of sub critical water tube boiler, at least one safety valve shall be set at or below the design working pressure and remaining safety valve set upto.....percentage above design working pressure.

(iv) If combustion air temperature increases by 20°C then thermal efficiency of boiler will increase by....%.

(v) Part of superheated steam is only used in power generation in case of .....boiler.

(vi) The evaporation ratio of a coal-fired boiler is 4. Steam enthalpy is 640 kCal/kg feed water temperature is 55°C, Calorific Value of coal is 4000 kcal/kg. The boiler efficiency is _____%.

(vii) The height of the chimney for 500 MW unit as per latest guidelines is.....

(viii) The minimum diameter of boiler safety valve as per IBR is.....

(ix) ..... welding defect occur due to entrapment of gas bubbles by the freezing dendrites during the cooling.

(x) The superheat temperature can be controlled by .....&.....method

3. State whether the following statements are True or False :- **Total Marks : 10 X1=10**

(i) Ferric oxide layer protect the base metal of tube while magnetite layer does not.

(ii) In low speed mills, the power consumption per ton of coal pulverized is more than medium speed mill.

(iii) In AFBC boiler, the combustion air is supplied at lower pressure as compared to CFBC boiler.

(iv) Film boiling occurs at very high pressure.

(v) 18/8 stainless steel contains chromium 18 % and molybdenum 8%.

(vi) The trade name of tube material 2 1/4 chrome is T11.

(vii) The area under the temperature -entropy curve of any thermodynamic process represents either heat absorbed or heat rejected.

(viii) Bomb calorimeter is used to determine higher calorific value ay constant pressure.

(ix) Pilling is term associated with foundation in boiler.

(x) For more sulphur content in a fuel means more height of chimney is required.

4. Answer the following questions:- **Total Marks : 10 X3=30**

(i) Mention three differences between fly ash & bottom ash. **Marks: 3x1**

(ii) What is difference between explosion and implosion ? What causes a boiler to explode ?

Marks : 2X1.5

(iii) What is Isokinetic sampling? Explain its working with sketch diagram. **Marks : 2X1.5**

(iv) Why are residual stresses important? How can residual stress be prevented in welding?

Marks : 2X1.5

(v) What are the three tripping protections in ESP? **Marks : 3x1**

(vi) Write a short note on AVT (All Volatile Treatment). **Marks: 3**

(vii) Differentiate between ferrite and austenitic steel with respect to properties, cubic structure, allotrope form of Iron. **Marks:3x1**

(viii) What is Poisson ratio? How are Young's modulus(E), Bulk modulus (K) and Poisson's ratio (μ) related? **Marks:2x1.5**

(ix) What do you know about waste heat recovery boiler ? **Marks:3**

(x) Calculate size of pipe required to transfer 100 ton/hr of steam at 40 kg/cm2 and 420°C. Velocity of the steam in the pipe line is to be maintained at 30m/sec. **Marks:3**

SECTION-2

5. Answer the following questions:- **Total Marks : 5 X6=30**

(i) What is non destructive test? Explain the basic principle with neat sketch of the following tests by showing advantages & limitations of (a) dye penetration test(b) magnetic particle test.

Marks: 1+2.5+2.5

(ii) Make a steam & water circuit diagram of typical 210 MW Thermal Power Plant by showing all relevant equipments. **Marks: 6**

(iii) (a) What is supercharged boiler? **Marks: 2+4**

(b) During an air pollution monitoring study, the inlet gas stream to the bag filter was 15000m3/hr. The outlet stream from the bag filter was a little bit higher at 16000m³/hr. Dust load at the inlet was 7gm/m³ and at outlet was 0.2gm/m³. How much dust in kg/hr was collected in the bag filter bin.

(iv) (a) What is acid dew point? Tell the expected value of acid dew point temperature of a flue gas produced by the combustion of a fuel containing 1% sulphur. **Marks: 2+4**

(b) Estimate SO_2 emission through chimney in tons/annum. Data as follows--

Days considered - 340

Fuel used-Furnace oil

Specific Gravity - 0.94

Sulphur content - 3.8 %

Quantity of FO consumption - 3.5 kl/hr

And if measured O_2 in flue gas is 2.5%, find excess air level.

(v) As a part of energy conservation measure, APH (Air Pre-heater) is installed in a forced draft furnace. The APH is designed to pre-heat 240 m3/min of combustion air to 250°C. Flue gasenters the APH at 375°C, Calculate the flue gas quantity leaving the stack and also determine the improvement in furnace efficiency after the installation of APH with the following data.

Marks: 3+3

Density of air	:	1.15 kg/m3
Specific heat of air	:	0.24 kCal/kg°C
Specific heat of flue gas	:	0.2 kCal/kg°C
Amount of fuel fired	:	920 kg/hr
Calorific value of fuel	:	9850 kCal/kg
Air to fuel ratio	:	18
Efficiency of furnace	:	80 %
Ambient temperature	:	30°C

***

JH/BOE/001/SEPTEMBER -2022

EXAMINATION BOARD OF BOILERS

(JHARKHAND STATE)

(Under The Boiler Operation Engineer's Rule, 2011 and its amendment)

Engineering Drawing : Paper-III

Time : 3 Hours

Maximum Marks : 100

Notes : I - Answer all the questions.
II - Carrying Mobile phones inside examination hall is strictly prohibited.

SECTION - 1

1. State whether the following statements are true or false. **Marks: 5x1=5**

(i) A cotter joint is used to connect two rods which are in shear.
(ii) The yield point in a static loading is lower as compared to fatigue loading.
(iii) The sleeve or muff coupling is designed as hollow shaft.
(iv) A screw is specified by its major diameter.
(v) In 3rd angle projection, the front view will be below the top view.

2. Fill in the blanks. **Marks: 5x1=5**

(i) When the shaft rotates in anticlockwise direction at slow speed in a bearing, it will move towards .....(left / right) of bearing making metal to metal contact.
(ii) According to Indian standard specification 100H6/g5 means that tolerance grade for hole & shaft are .....&.....(6/5) respectively.
(iii) When a nut is tightened by placing a washer below it, the bolt will be subjected to ..... (tensile/compressive) stress.
(iv) According to Indian Standards, the diameter of rivet hole for a 24 mm diameter of rivet should be.....mm (23/24/25).
(v) The saddle key is .....(more/less) suitable than sunk key for heavy duty applications.

3. Choose the correct option **Marks: 5x1=5**

(i) Welding in a 3G position is used for
(a) Vertical up & down Welding (b) Horizontal Welding
(c) Flat surface Welding (d) Overhead Welding

(ii) The least count of vernier caliper & micrometer are
(a) 0.1mm &0.2mm (b) 0.01mm &0.1mm
(c) 0.1mm &0.05mm (d) 0.1mm &0.01mm

(iii) Which one of the following is a flexible coupling?
(a) Sleeve coupling (b) Flange coupling
(c) Split muff coupling (d) Bushed pin type coupling

(iv) The distance through which a screw thread advances axially in one turn is called
(a) Pitch of thread (b) Lead of thread
(c) Depth of thread (d) Diameter of thread

P.T.O.

(v) The length, width in a case of arrow head in Engineering drawing is in ratio of

(a) 1:1 (b) 2:1 (c) 3:1 (d) 4:1

4. Write short note on the following **Marks: 5x3=15**

(i) Difference between pressure relief valve and safety valve

(ii) Difference between 1st angle of projection & 3rd angle of projection

(iii) Difference between cotter and knuckle joints

(iv) Difference between isometric and orthographic view of projection

(v) Difference between mechanical drawing and production drawing

5. Draw the symbols for the following **Marks: 5x2=10**

(i) Run out

(ii) Flatness

(iii) Double bevel butt joint

(iv) Pinch valve

(v) Surface finish

6. Isometric view of a machine block is given in figure no. 1. **Marks: 3x5=15**

Draw the three views as

(i) The view from the front

(ii) The view from the above

(iii) The view from the left

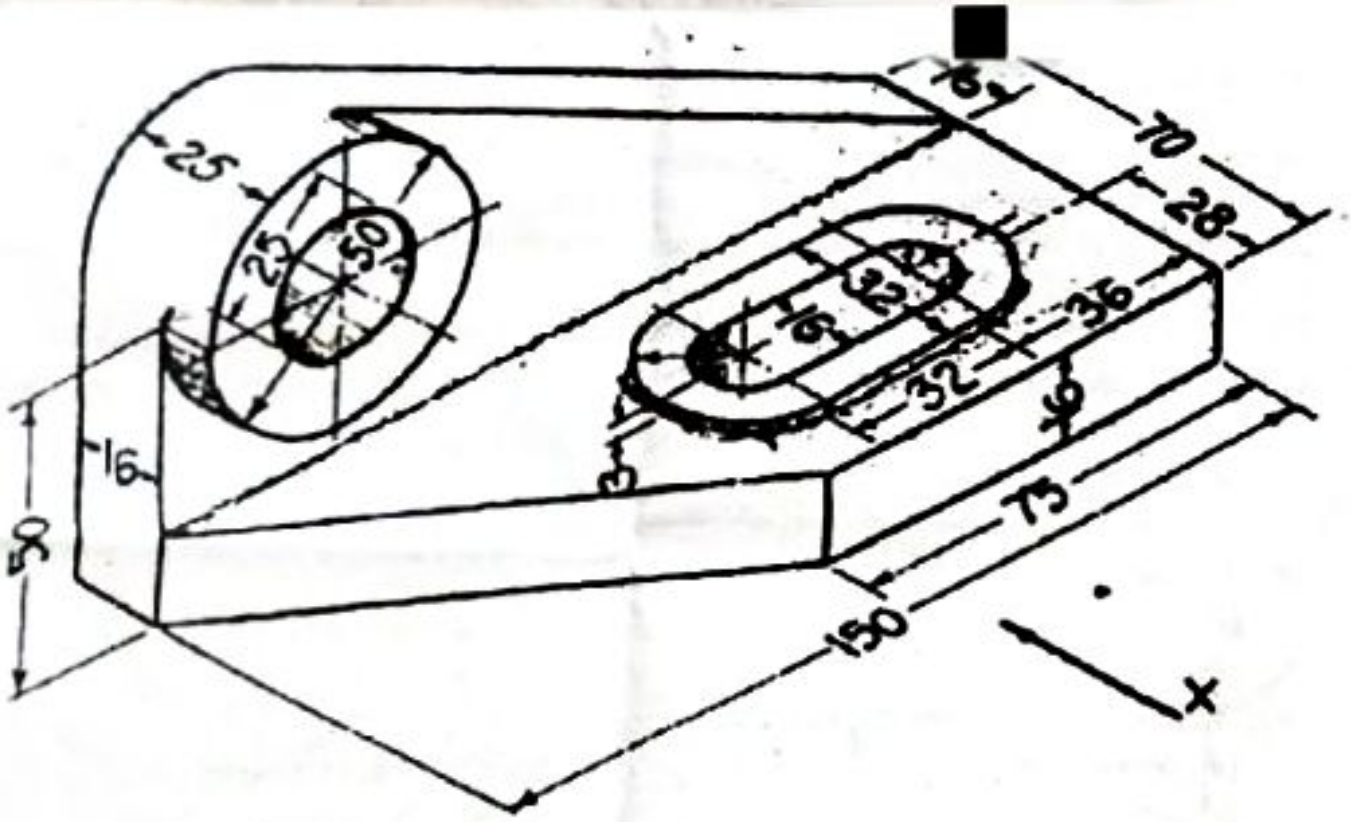

Figure No. 1

7. **Orthographic view of one object are given in figure no. 2, in which a line or lines or a view may be missing. Draw Isometric view of this object.** **Marks: 10x1=10**

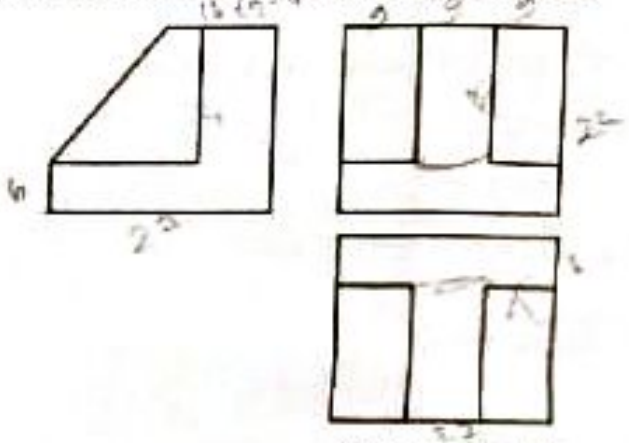

Figure No. 2

8. **Write short note on the following and explain with diagram.** **Marks: 5x3=15**

(i) Inverted bucket steam trap

(ii) . Transition fit

(iii) Buttress thread

(iv) Seam welding joints

(iv) Eye bolt

9. **Write name of any 10 parts shown in Dead weight type safety valve (Assembly) in figure no. 3.** **Marks: 10x1=10**

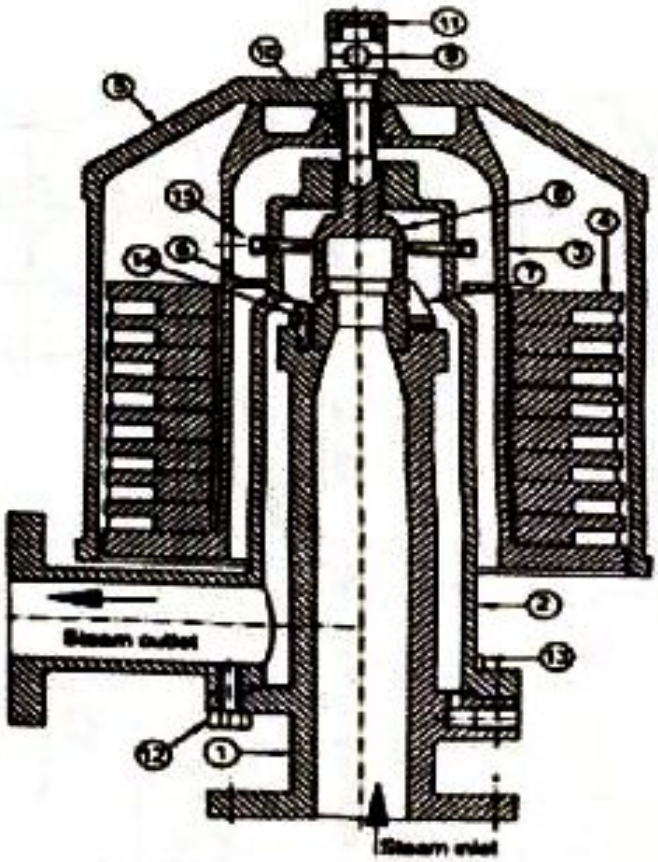

Figure No. 3

10. Read the assembly drawing of Non Return Valve in figure no.4 and answer the following questions. **Marks: 10x1=10**

(i) What is interference between valve seat and body cover?

(ii) What is PCD of cover and its thickness?

(iii) What is designated by 'M' in set screw size?

(iv) What is combined length of grip length and head of bolt?

(v) What is ID of valve seat?

(vi) What is height of valve?

(vii) What is thickness of valve seat?

(viii) What is thickness of collar at valve body?

(ix) How many valve chests are there in assembly?

(x) Draw symbol of NRV Valve ?

10] DETAILS OF NON - RETURN VALVE

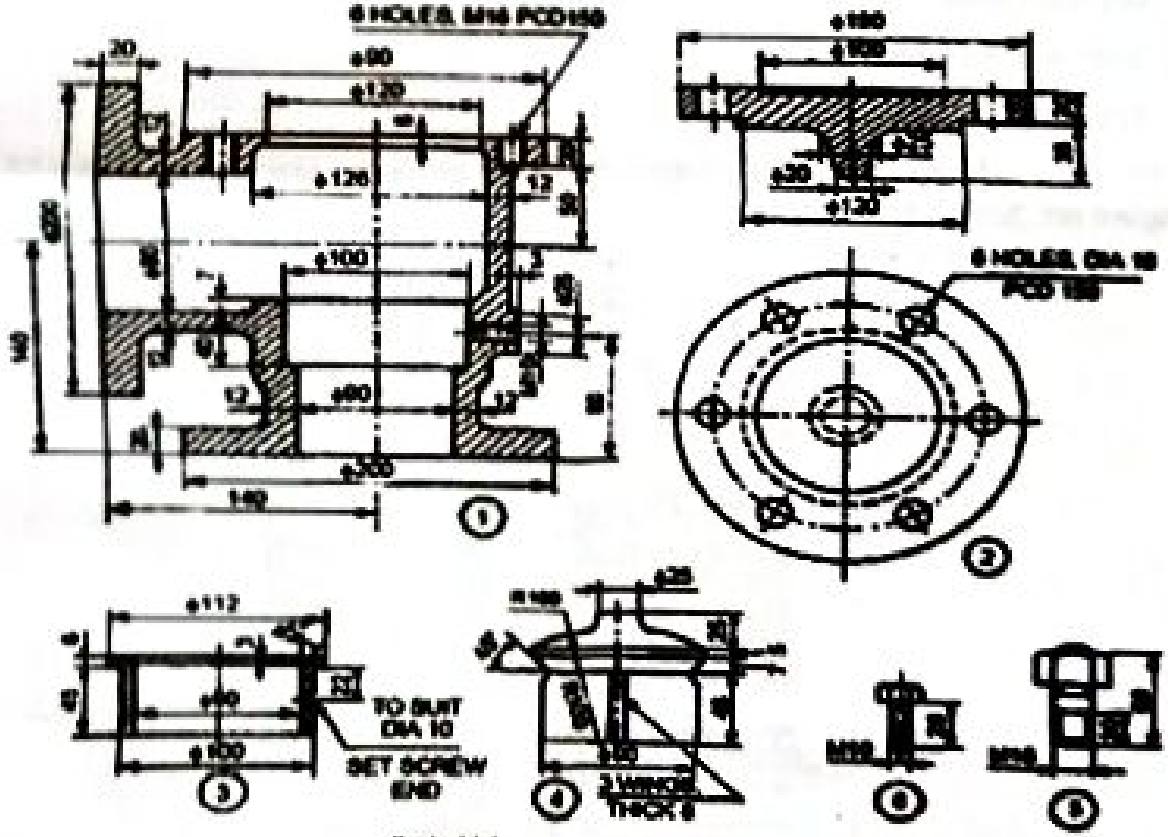

Parts List

No.	Name	Mati	Qty.
1	Body	Brass	1
2	Cover	Brass	1
3	Valve Seat	Bronze	1
4	Valve	Brass	1
5	Stud with nut	MS	6
6	Set screw	MS	1

***