Study Material For Boiler Operation Engineer (BOE) Exams

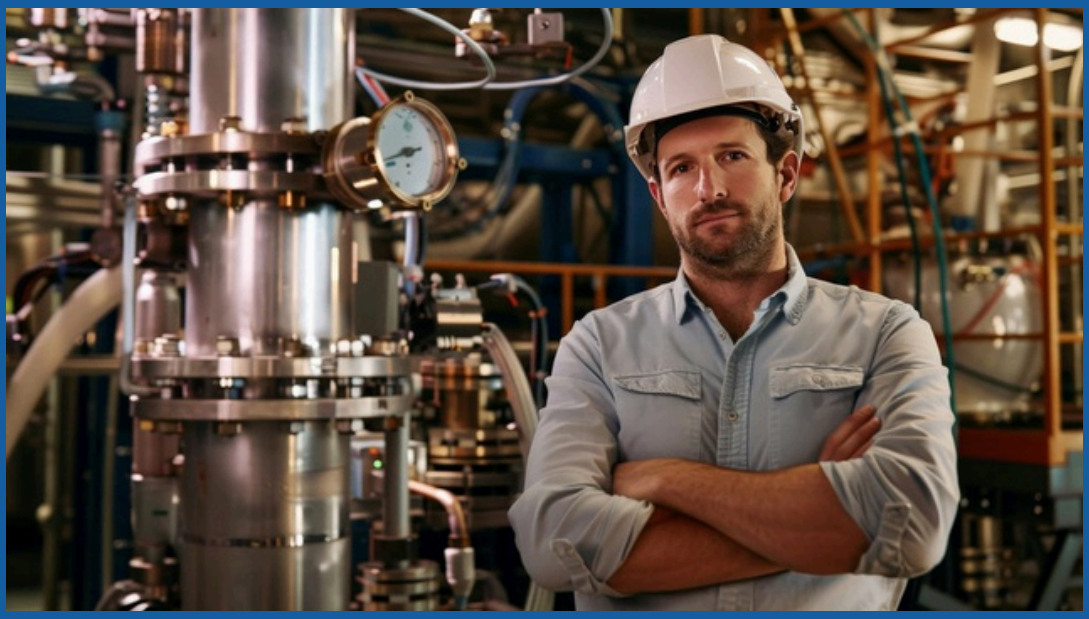

Theory, Numerical Problems, MCQs and Boiler Drawing Problems from BOE Exams

Amazon Flipkart Pothi

PROENGR.IN

SUDESH K JAIN

BOILER OPERATION ENGINEERS EXAMINATION BOARD

(JHARKHAND STATE)

(Under The Boiler Operation Engineer's Rule, 2011)

Boiler Technology : Paper – I

Time : 3 Hours *Maximum Marks : 100*

Notes: -

(1) The question paper is divided into two sections.
(2) Section – 1 is compulsory.
(3) Answer any 5 questions from section -2.
(4) Answer in brief and to the point
(5) Draw neat sketches, wherever necessary

SECTION – 1

1. *Choose the right answer : -* **Total Marks : 10x1=10**

(i) *The critical point is the point at which*
- (a) *melting point and boiling point temperature become equal.*
- (b) *change of volume accompanying evaporation is zero.*
- (c) *change of volume accompanying evaporation is not zero.*
- (d) *None of the above*

(ii) *The total heat of the steam at a pressure of 10 ata is 630 kcal/kg. The condition of the steam is*
- (a) *wet*
- (b) *dry and saturated*
- (c) *superheated*
- (d) *none of the above*

(iii) *Which of the following is a fire tube boiler*
- (a) *Lancashire boiler*
- (b) *Cochran boiler*
- (c) *Locomotive boiler*
- (d) *All of them*

(iv) *A device which is used for pumping water into the boiler and also for heating the feed water is called*
- (a) *economizer*
- (b) *feed heater*
- (c) *feed pump*
- (d) *injector*

(v) Maximum heat loss in a boiler installation occurs due to
(a) moisture in fuel
(b) incomplete combustion
(c) flue gases
(d) unburnt carbon

(vi) The absolute pressure of air in the condenser is determine by
(a) Dalton's law
(b) Charles' law
(c) Boyles law
(d) Avogadro's law

(vii) A good fuel is one which has
(a) high ignition point and high calorific value
(b) high ignition point and low calorific value
(c) low ignition point and low calorific value
(d) low ignition point and high calorific value

(viii) In flue gas analysis the constituents should be absorbed in the following orders
(a) O2, CO and CO2
(b) CO2, O2 and CO
(c) CO2, CO and O2
(d) CO, CO2 and O2

(ix) Which of the following is not a regenerative air heater?
(a) Ljungstorm type air heater
(b) Diphenyl air heater
(c) Tubular type air heater
(d) Pebble type air heater

(x) The maximum strain energy that can be stored in a body is known as-
(a) Impact energy
(b) Resilience
(c) Proof resilience
(d) Modulus of resilience

Total Marks: 10x2 =20

2. Fill in the blanks :-

(i) When economizers are used to heat boiler feed water, every 10 deg F rise in feed water temperature increases the savings in fuel by ----------%

(ii) With all of the safety valves popping, the pressure should not go higher than ---------% above the MAWP.

(iii) A safe minimum water concentration of contaminates in steam generators is maintained by ---------- ----------.

(iv) A deaerating feed water heater removes non-condensable gases such as air, free oxygen, CO2 from feed water that can cause ----------

(v) ---------- is the difference in pressure between two points of measurement that causes air or gases of combustion to flow.

(vi) The bourdon tube in steam pressure gauge is protected by a ----------.

(vii) An ultimate analysis of coal is used to determine the percentage of ----------, ----------, ----------, ----------, ---------- and ----------.

(viii) In a three element feed water regulating system, ----------, ---------- and ---------- are measured to control drum level.

(ix) The function of fuel oil burner is to ---------- the fuel oil completely

(x) Stay bolts are most commonly used in ----------boilers.

3. **State whether the following statements are True or False: -** **Total Marks: 10x1=10**

(i) Excess air of combustion is indicated by testing of CO_2 in the gases of combustion

(ii) Steam boilers that are out of service can be laid up wet or dry

(iii) The size of a boiler tube is determined by the inside diameter of the tube.

(iv) The main function of a steam trap is to remove air and condensate without the loss of steam.

(v) The main function of a continuous blow down system is to lower the total hardness of the boiler water

(vi) A glove valve offers less resistance to flow than a gate valve does.

(vii) Boy's calorimeter is used to determine calorific value of gaseous fuel.

(viii) The major portion of the heat from the cooling water in the cooling tower is removed by air flowing through the cooling tower.

(ix) In superheater the sensible heat and the latest heat is received by the working fluid.

(x) Chemical deaeration of feed water with the use of hydrazine removes oxygen and increase pH.

4. **Answer the following questions:-** **Total Marks: 10x3 =30**

(i) A shaft is transmitting 100 kW at 160 r.p.m. Find a suitable diameter for the shaft, if the maximum torque transmitted exceeds the mean by 25%. Take maximum allowable shear stress as 70 MPa.

(ii) A thin cylindrical pressure vessel of 500 mm diameter is subjected to an internal pressure of 2 N/mm2. If the thickness of the vessel is 20 mm, find the hoop stress, longitudinal stress and the maximum shear stress.

(iii) Find the efficiency of a Single riveted lap joint of 6 mm plates with 20 mm diameter rivets having a pitch of 50 mm assuming Permissible tensile stress in plate = 120 MPa, Permissible shearing stress in rivets = 90 MPa and Permissible crushing stress in rivets = 180 MPa

(iv) What do you mean by Boiler Mountings? According to Indian Boiler Act what are they? Briefly explain the function of any 3 mountings.

(v) A boiler consumes 224 tons of coal to produce 1864 tons of steam per day. The steam is dry, saturated at 90 atm. absolute. Calculate the boiler thermal efficiency and the equivalent evaporation per ton of coal if the calorific value of coal is 5400 kcal/kg, the specific enthalpy of feed water being 425.036 KJ/kg of water.

(vi) A steel bar 2.4 m long and 30 mm square is elongated by a load of 500 kN. If poisson's ratio is 0.25, find the increase in volume. Take $E = 0.2 \times 10^6$ N/mm2.

(vii) In a boiler trial the composition of dry flue gas by volume was as under:-

CO_2	: 11%
CO	: 2%
O_2	: 4%
N_2	: 83% by difference

Determine the quantity of air passing to furnace per kg of fuel burnt if the carbon in the fuel was 81% by weight. Also determine the weight of excess air per kg of fuel.

(viii) What are the advantages of a surface condenser over a jet condenser?

A steam engine developing 200 H.P. uses 7.25 kg of steam per H.P. hour. It exhaust steam at a pressure of 0.15 kg/sq cm absolute. The condensate leaves at 36 deg C. The cooling water to the

condenser enters at 18 deg C and leaves at 35 deg C. Determine the weight of cooling water used per hour if the dryness fraction of steam is 0.9.

(ix) What is difference between priming and foaming? What are the causes of priming and foaming? What is the harmful effect of priming and foaming?

(x) What is the function of cooling tower in power plant? What are the three main objectives of cooling water? Write the main four factors responsible for corrosion in cooling water system.

SECTION – 2

5. Answer any 5 of the following questions :- **Total Marks: 5x6 =30**

(i) Define the torsional shear stress.

A circular shaft of 3 cm diameter is 2 meter long. It is required to transmit 10 H.P. at 80 rpm. Determine the strain energy stored in the shaft.

(ii) Draw a neat process flow diagram of DM plant showing the components of pressure sand filter, Activated carbon filters, strong acid catain, strong base anion, weak base anion, degasser, mixed bed unit, DM Water storage tank in a sequential order used for treatment of raw water received from River. Briefly explain the function of each component involved in the system. Write the exchange reactions involved in the various stages of demineralization process of water treatment. . Also write the DM water quality in terms of pH, conductivity and silica at the outlet of Mixed Bed unit suitable for high pressure boiler operating at the pressure more than 100 kg. cm2 abs and the temperature of 540 deg C. Also write the exchange reactions involved during the regeneration process of the Ion Exchange Units.

(iii) State Dalton's law of partial pressure.

The vacuum produced in a surface condenser is 685 mm of Hg when the barometer reading is 760 mm of Hg. The condensing steam temperature is 36 deg C, the net volume of steam space is 25 m^3. Determine: (a) The partial pressure of air (b) The mass of air present in the condenser

(iv) What is blow down? What is the purpose of carrying out continuous and intermittent blow down in boiler system?

A drum type boiler unit operating at a pressure of 50 kg/sq cm absolute discharges water to a flash tank in a continuous blow down hook up. The flash tank is maintained at a pressure of 4 kg/sq cm absolute. Determine the amount of steam separated in a flash tank per ton of blow down water if the coefficient accounting for loss of heat to surroundings is 0.98.

(v) Define the sensible heat and latent heat of vaporization.

Steam is generated at 8 kg/sq cm absolute from water at 32 deg C. Find the heat required to produce 1 kg of steam –

(a) when the dryness fraction is 0.8
(b) when steam is dry and saturated
(c) when steam is superheated and the temperature of steam is 300 deg C. The specific heat of superheated steam may be taken as 0.55

(vi) *The following observations were made during a boiler trial:*

Duration of test	*: 1 Hour*
Amount of coal burnt	*: 700 Kg*
Amount of feed water evaporated	*: 6200 Kg*
Calorific value of coal	*: 8000 Kcal/kg*
Temperature of feed water entering boiler and leaving economizer	*: 82 deg C*
Temperature of water entering entering economizer	*: 22 deg C*
Pressure of steam generated	*: 11 ata*
Dryness fraction of steam leaving boiler and entering superheater	*: 0.9*
Temperature of superheated steam	*: 233.2 deg C*
Specific heat of superheated steam	*: 0.50*

Find out the thermal efficiency of the plant and express it as percentage of the heat obtained by feed water in various constituents units.

(vii) *Define the Hook's Law. With the help of stress- strain diagram explain the proportional limit, elastic limit, yield point, ultimate and breaking stress.*

JH/BOE/ (EXAM)/001/OCT-2015

BOILER OPERATION ENGINEERS EXAMINATION BOARD
(JHARKHAND STATE)
Under The Boiler Operation Engineer's Rule, 2011
Boiler Technology: Paper-2

Time: 3 Hours **Maximum Marks :100**

NOTE – All questions are Compulsory.

Q.1 **Choose the correct answer** (01 Mark each)

1) The material commonly used in boiler drum is

i) SA299 ii) SA213 TP 347H iii) SA213 T91 iv) SA213 T11

2) Frequency of soot blowing in a boiler is decided by

i) Boiler load ii) Temperature of feed water iii) Temperature of outgoing flue gas iv) Excess air percentage

3) To improve wear resistant which element is used in boiler metallurgy?

i) Cr ii) Ni iii) Mo iv) V

4) Caustic embrittlement is caused by

i) Low PH ii) increase in silica iii) presence of TDS iv) High PH

5) The chemical is used in boiler drum for chemical treatment of boiler water

i) Na_3Po_4 ii) NH_3 iii) NH_4 iv) HCl

6) Indicate a permissive which is not among the necessary permissive for light-up any boiler –

i) All drum vents closed Ii) Minimum drum level iii) Boiler purge complete iv) Atomising Air/ Steam is available.

7) For every 38 ^{0}C of superheat above saturation temperature the heat gain in station heat rate is approximately

i) 3% ii) 5% iii) 8% iv) 10%

8) What is the location of radiant super heater in furnace?

i) After re-heater ii) in second pass

iii) In first pass iv) before economizer

9) The overall efficiency of super critical boiler is

i) 35% ii) 39% iii) 42% iv) 25%

10) From the energy efficiency point of view which flow regulating device is the most suitable for radial flow fan ?

i) Variable frequency drive ii) Hydraulic coupling iii) Multi stage Gear-box iv) Inlet guide vane

(1 Mark X 10 = 10)

Q. 2 **Fill in the blanks choosing appropriate answer** (2 Marks each)

i) The RPM of LJUNGSTROM air pre heater is ..... (2 to 3 RPM / 5 to 10 RPM / 10 to 15 RPM)

ii) The material used in cold end heating elements of rotary air pre heater is ..... (Low carbon steel / Corten steel).

iii) The safety device used in rotary air heater is ..... (Rotor stoppage sensor / Soot blower / Hydraulic coupling)

iv) The ceramics used to manufacture tiles of coal dust pipe lines contains approx. 90% (Alumina/Silica/Calcium sulfate/Refractory)

v) The speed range of bowl mill is ..... (Less than 50 rpm / 50-100 rpm)

vi) Positive displacement fuel oil pressure pumps should not run for prolonged periods with the relieve valves open because this causes ..... (Cavitation / Loss of pressure / Loss of power)

vii) A Bourdon tube is a device used to measure ..... (Flow velocity / pressure/ Both)

viii) The maximum temperature limit of SA 213 TP347H for boiler operation is ..... (705 / 750 Deg C)

ix) An impurity in water requires critical attention in high pressure boiler is ..... (Suspended salts / Silica)

x) In DM plant the degasser is used to remove ..... (CO_2 / Ammonia / Hydrogen)

(2 Marks X 10=20)

Q. 3 **Indicate True or False** (1 Mark each)

i) The purpose of oil burner register is to stabilize the oil flame adjacent to the sprayer tip.

ii) Economizer recirculation system is provided for increasing the output of boiler.

iii) Incomplete combustion can be best judged by measuring CO in flue gas.

iv) Ball and tube mill crushes the coal on the principle of Impact.

v) Reheating of steam in turbine increases the work done through turbine and its efficiency.

vi) Wet steam shall be more effective for cleaning boiler wall surfaces using Wall / soot blowers in furnaces.

vii) Stress Assisted corrosion is related to weld joint failure.

viii) Hydra-step is a device mostly used to monitor Deaerator level.

ix) Classifier installed in a mill is primarily used for varying mill output.

x) LRSB or Wall blowers are operated to increase the heat transfer in the boiler.

(1 Mark X 10 = 10)

Q. 4 SHORT ANSWERS (3 Marks- each)

1. What are the possible two causes of drum level very high & very low each?
2. Explain what is acid cleaning (EDTA) and steam blowing of a boiler.
3. Explain departure from nucleate boiling.
4. Explain any three welding defects.
5. With neat sketch explain the sealing of furnace. Why it is provided in a boiler?
6. Explain the difference between corner firing system and opposite firing system.
7. Difference between proximate analyses and ultimate analysis of coal.
8. Calculate the height of chimney required to produce a draught equivalent to 1.7 cm of water if the flue gas temperature is 270°C and ambient temperature is 22°C. ~~Minimum ambient air per kg of fuel is 17~~

9. What is preservation of a boiler in long shut down?
10. Why PH in boiler drum is maintained between 8.5 and 9.0?

(3 Marks X 10 = 30)

Q. 5 Long Answer (5 Marks each)

1. What are the connections of boiler drum and explain various drum internals with neat sketch.
2. What are the advantages & disadvantages of regenerative air heater over recuperative air heater.

3. Explain:-

i) Any two methods to control steam temperature and

ii) Explain following fan control systems (any three):-

a. Variable Frequency Drive b. Inlet Guide Vane control and

c. Blade Pitch control d. Hydraulic coupling

4. What is the purpose of ESP and how does it work, explain in brief?
5. What are the roots causes of following boiler tube failure and their symptoms:-

a) Caustic corrosion
b) Fly ash erosion
c) Fire side corrosion
d) Short term over heating
e) Fatigue failure

6. Explain the working principle of ball mill & bowl mill. Explain factors affecting mill performance.

(5 Marks X 6 = 30)

Jharkhand Boiler Operation Engineers Examination 2015

Boiler Engineering: Paper-III

Time: 3 Hours **Maximum Marks: 100**

Q1: Draw the front, top & side view of given Isometric view? (15 Marks)

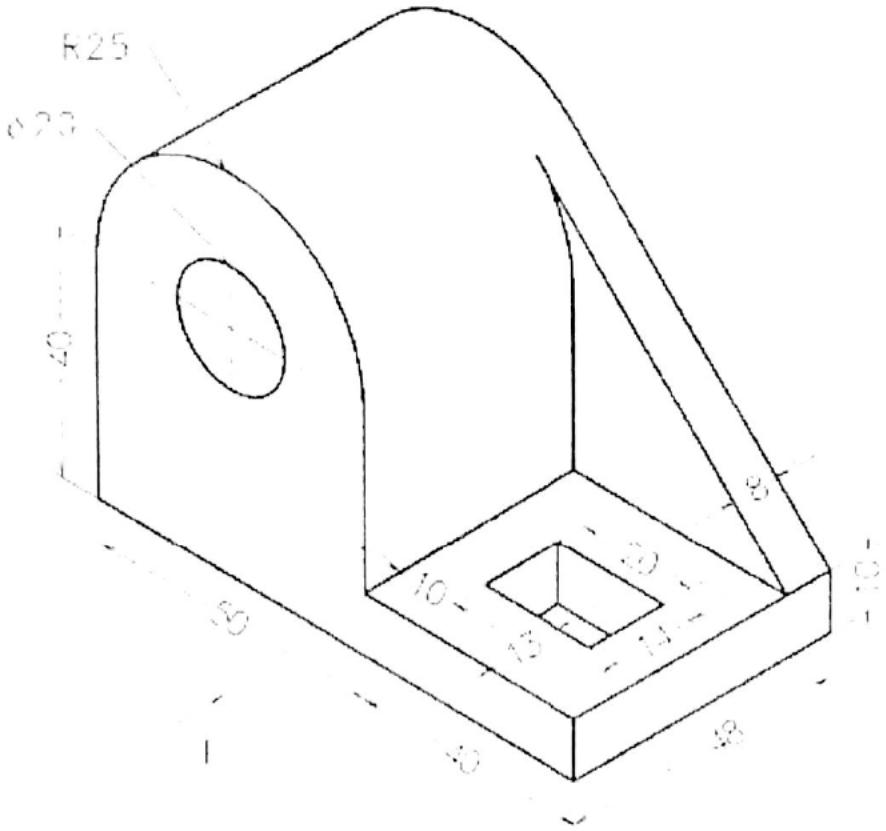

Q 2 :Draw the Isometric view of block from the given Front and Top view?
(15 Marks)

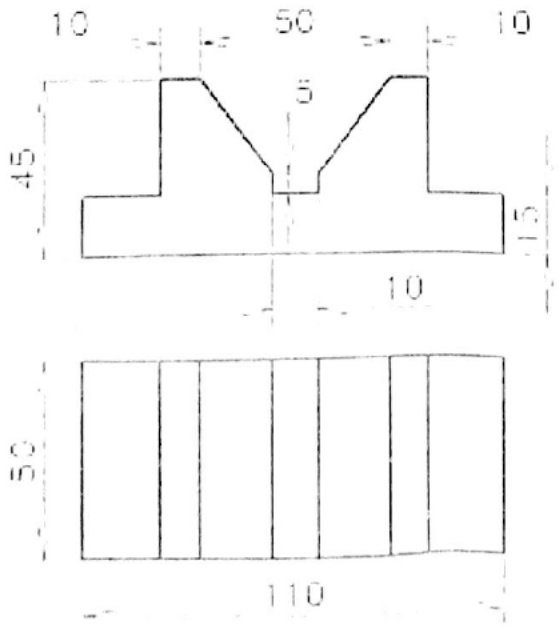

Scanned by CamScanner

Q 3 : Draw the front, top & side view of given Isometric view?(15 Marks)

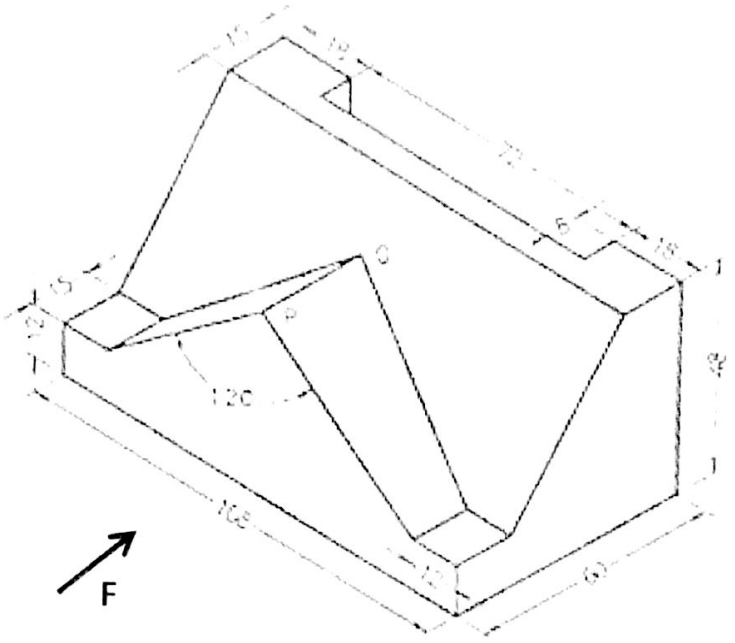

Q 4 :Match the Isometric view with Orthographic view? (5 X 3 = 15 Marks)

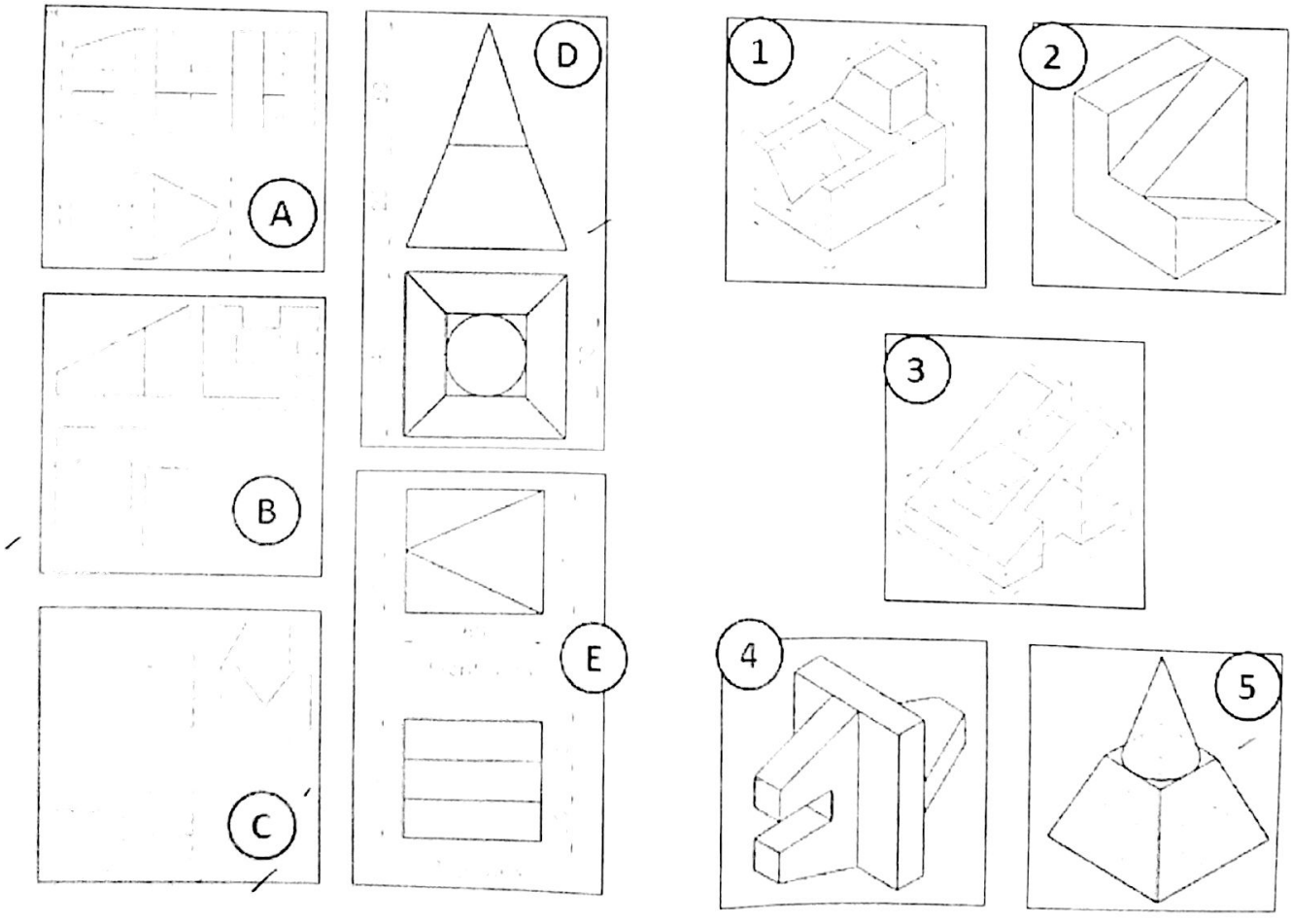

Jharkhand Boiler Operation Engineers Examination 2015

Boiler Engineering: Paper-III

Time: 3 Hours **Maximum Marks: 100**

Q 5 : Name the symbols given below: (10 X 2 = 20 Marks)

1 

2 

3 

4 

5 

6 

7 

8 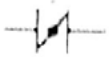

9 

10 

Q 6 :Read the assembly drawing & answer the following : (10 X 2 = 20 Marks)

1) What is the thread specification of the spindle?
2) What is the thread size of the studs (13)?
3) What is the bore and height of the gland?
4) What are the flange bore and outside diameter?
5) What is the taper on the valve seat?
6) How many studs are there to fix the cover (9) & how they are located?
7) What is the bush height?
8) What is the size of the hand wheel (outer dia) and its arm thickness?
9) What is the size of the spindle, where the hand wheel is fitted?
10) What is the thickness of the valve flange?

Boiler Engineering: Paper-III

Time: 3 Hours

Maximum Marks: 100

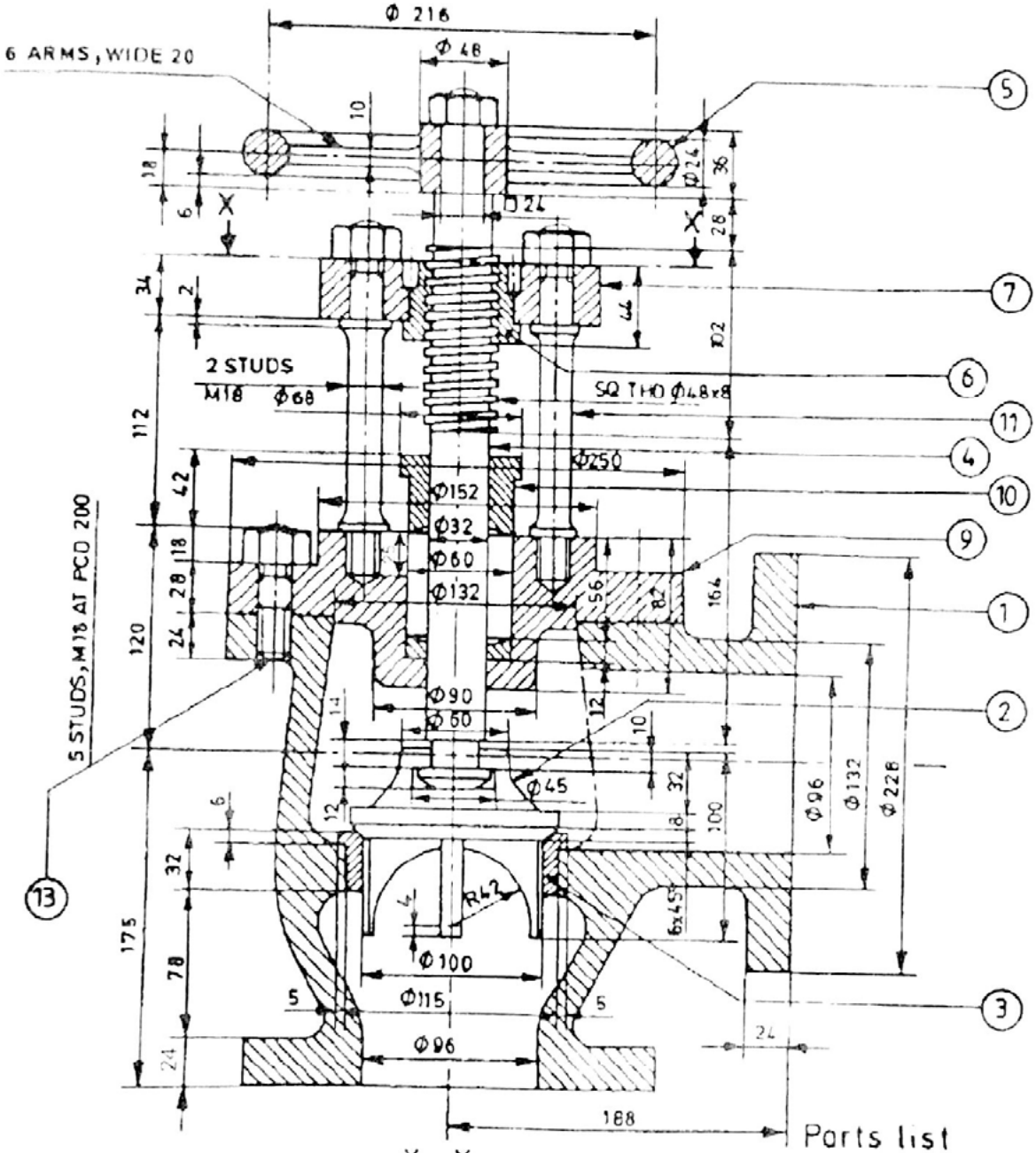

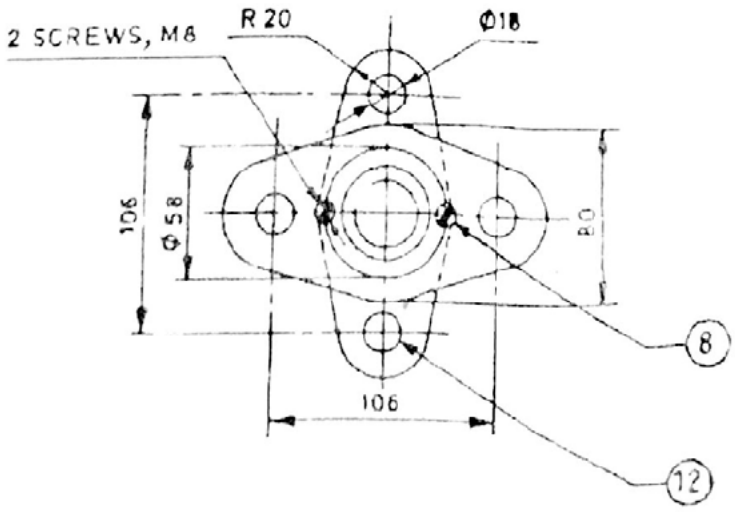

Parts list

Part No	Name
1	Housing
2	Valve
3	Valve seat
4	Spindle
5	Hand wheel
6	Bush
7	Bridge
8	Screw
9	Cover
10	Gland
11	Pillar
12	Stud
13	Stud

(Assembly drawing for Q 6)