Study Material For Boiler Operation Engineer (BOE) Exams

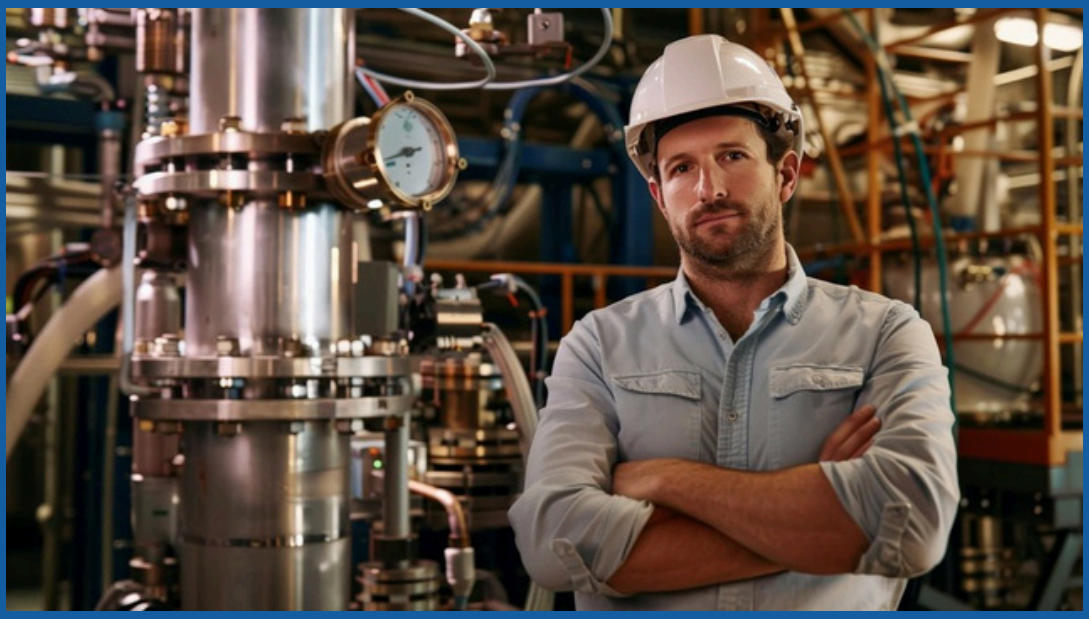

Theory, Numerical Problems, MCQs and Boiler Drawing Problems from BOE Exams

Amazon Flipkart Pothi

PROENGR.IN

SUDESH K JAIN

Name: _____ Roll No.:_____

BOILER OPERATION ENGINEERS EXAMINATION – 2019

Paper – 1

Time: 2.5 hrs **Maximum Marks: 100**

Read the following instructions carefully before attempting the question paper:

- Do not write or mark anything on the question paper except your name and roll no. on the designated space.
- This question paper is divided into two sections A and B.
- Section-A contains TWO questions of 20 marks each. All questions are compulsory.
- Section-B contains FOUR questions of 20 marks each. Attempt any THREE questions.
- Answer all questions in serial order. All parts/sub-parts must be answered together and must not be interposed by answer(s) of other question(s).
- Draw neat sketches wherever necessary.
- Use of only scientific calculator is permitted.
- Assume any missing data suitably (if any).
- If more questions are attempted then only the first attempted question will be evaluated.
- Candidate should answer the paper in ENGLISH only and in legible handwriting.
- This Paper contains THREE (03) pages and total SIX questions (06).

SECTION – A
(This section is COMPULSORY)

1. **Attempt all parts at one place only.** **(20 × 1 = 20)**

a) What is the circulation ratio?

b) What is dryout?

c) What is the range of steam generation capacity (in ton/h) of the 'M' boiler?

d) What is PFBC in the context of steam generator?

e) Why are simple impulse turbines not so common?

f) What is Perma-plug?

g) What do you mean by the topping cycle?

h) What is the exhaust temperature range of a gas turbine?

i) What is fixed carbon?

j) What is the proximate analysis?

k) What is the purpose of F-500 in thermal power plants?

l) What is rat holing?

m) What is viscosity and what factors influence the viscosity of liquid fuels?

n) What is the congealing point?

o) What is the diesel index?

p) What is the induction period?

q) What should be the value of the polydispersity coefficient for pulverized fuel? Why?

r) What do you mean by flaking and pitting?

s) What is the basic difference between 'scratch' and 'scuffing'?

t) What is FLGR in the context of boilers?

2. **Attempt all parts in SHORT and at one place only.** $(10 \times 2 = 20)$

a) What are the advantages and limitations of forced circulation over natural circulation?

b) What are the common failure modes in the flue-gas-heated waste-heat boiler?

c) Modern high-pressure naval steam boilers are designed with all tubes bent to an arc of a circle. What are the advantages of this design?

d) What factors are responsible for the lower projected cost of PCFB as against PBFB?

e) What are the advantages of steam turbines over reciprocating steam engines?

f) What is the basic difference between the mountings and accessories of boiler? Name at least two mountings and accessories.

g) What is cordal thermocouple and where are they located?

h) Enlist the types of equipment used to measure the viscosity conveniently.

i) What are the causes of the genesis of smearing in ball and roller bearings?

j) Reburning in also called staged-fuel injection. Why?

SECTION – B
(Attempt any THREE questions)

3. a) Show that the combined cycle efficiency of PFBC is always greater than the equivalent steam cycle plant efficiency. 10

b) The following observations were made during the trial run of a boiler. Rate of steam generation= 5 ton/h; steam quality= dry, saturated; Steam pressure= 10 bar gauge; Average specific heat of steam=2.30 kJ/kgK; Feed water temperature=85 ^{0}C; Room temperature=25 ^{0}C; Atmospheric pressure=1 bar; Fuel consumption=650 kg coal/h; Calorific value of coal= 31380 kJ/kg of coal; Moisture content of coal= 2.5%; Fuel contains= C-86%; H-5%; Ash-9%; Flue gas temperature=300 ^{0}C; Mean specific heat of flue gases= 1.05 kJ/kgK; Analysis of dry flue gases= CO_2-10%, O_2-8%, N_2-82%; Specific heat of steam at10 bar gauge is 777 kJ/kg; Latent heat of evaporation at10 bar gauge is 2000 kJ/kg; Specific enthalpy of feed water is 356 kJ/kg. Total heat of water vapour at 1 bar absolute is 2676 kJ/kg. Produce a complete heat balance sheet (on absolute and percentage basis) taking 1 kg dry coal as the basis. 10

4. a) What is compounding of the turbine? Explain the principle, construction, and working of Velocity and Pressure compounding of an Impulse turbine with a neat sketch. 10

b) The following data are available for a reaction turbine. 10

Steam pressure at inlet= 20 bar absolute (specific enthalpy= 3010 kJ/kg); Steam temperature at inlet= 300 ^{0}C; Steam pressure in the condenser= 0.2 bar absolute (specific enthalpy= 2220 kJ/kg); Speed of the turbine= 5600 RPM; Power developed= 25000 HP; Reheat factor= 1.05; Stage efficiency= 80%; Axial velocity of steam= 75% of the blade velocity; Specific volume of the dry and saturated steam at 0.2 bar is 7.65 m^3/kg; Blade height= 0.10 times of mean blade diameter one step below. Calculate the

(i) Steam consumption per horse power hour

(ii) Drum diameter if the exhaust steam is 0.94 dry

5. a) A surface condenser operates at a pressure of 0.14 bar absolute (Saturation temperature= 52 ^{0}C, Sensible heat= 215 kJ/kg, Latent Heat= 2375 kJ/kg). Dry, saturated steam is condensing at a rate of 20 ton/h. From the given data calculate the heat transfer area required for the surface condensation of steam and also determine the number of tubes required. 10

Cooling water inlet temperature=33 ^{0}C; Cooling water outlet temperature=40 ^{0}C; Condensate temperature at exit= 50 ^{0}C; ID/OD of surface condenser tubes= 19/26 (mm); Length of each tube= 3m; Number of passes= 2; Overall heat transfer coefficient for surface condenser= 3.560 kW/m^2/^{0}C.

b) The analysis of coal-fired in a boiler shows the following composition by mass: Carbon-81%; Hydrogen-9%; Oxygen-2%; Ash-8%. The rate of coal consumption in the boiler is 0.9 ton/h and air supplied by a blower is 30% excess of stoichiometric air. Calculate: 10

(i) The intake air volume when the intake conditions at blower are 100 kPa and 291 K. (R_{air}=0.287 kJ/kgK)

(ii) The percentage composition (by mass) of dry flue gas.

6. Write short notes on the following with neat sketch: 4*5=20

a) Water level indicator

b) Junction valve

c) Blow-off cock

d) Fusible plug

Name: _____ Roll No.: _____

BOILER OPERATION ENGINEERS EXAMINATION – 2019

Paper – 2

Time: 2.5 Hours **Maximum Marks: 100**

NOTES TO THE CANDIDATE:

- Write your name and roll no. on the question paper. Do not write or mark anything else on the question paper.
- Section-A consisting of TWO questions is COMPULSORY.
- Candidate must attempt ANY THREE questions from Section-B.
- All parts/sub parts of the SECTION- A must be answered together and must not be interposed by answer(s) of other question(s).
- Each question carries 20 marks.
- Brief and to the point answers will attract more marks. Draw neat sketches wherever necessary.
- Use of only scientific calculator is permitted.
- Assume any missing data suitably, if any.
- If more questions are answered, the last extra answers will be ignored.
- Candidate should answer the paper in ENGLISH only and in legible handwriting.
- This Paper contains three (03) pages and total six questions (06).

SECTION – A
(This section is COMPULSORY)

1. Attempt all parts at one place only. **(20 × 1 = 20)**

a) What is the density of pulverized coal?

b) How is the throughput capacity of mechanical burner related to fuel oil pressure?

c) What is phosphate doser? Name any two phosphate doser.

d) What is the extent of draught loss in economiser?

e) Name the four major standards for safety valves being practised worldwide.

f) On which factors does the rate of combustion of liquid fuel droplets depend? List them.

g) What is general equation of blowdown? Explain its significance.

h) Why are austenitic steels not used to enable the tubes to operate at higher temperature?

i) Because of complexity and demanding function, a valve is prone to corrosion. List any four types of corrosion attack on a valve?

j) What factors determine the efficiency of a steam generating unit?

k) How to determine that a boiler needs chemical cleaning?

l) What do you mean by runback capability of boiler?

m) What is the advantage gained by the reinjection of a portion of fly ash into the furnace?

n) What is terminal pressure drop?

o) Why is Co_2 % in the flue gases measured?

p) Draw a graph between steam quality and salt concentration in boiler feed water?

q) What is a system resistance characteristic?

r) What is major drawback of steel chimney?

s) Draw temperature – time profile in pulverised coal combustion.

t) Why does it become necessary to make boiler water more alkaline?

2. Attempt all parts in SHORT and at one place only. **(10 × 2 = 20)**

a) List four types of safety valves used in boiler.

b) What is equivalent evaporation?

c) Why are boiler operation and maintenance considered essential elements in boiler design?

d) What do you mean by tube deposit sampling? List any two locations where tube sampling is performed.

e) Discuss some of the advantages and disadvantages of different materials used in chimney construction.

f) List the operating conditions under which glass reinforced plastic chimneys are preferred.

g) What factors will determine whether a water droplet suspended in steam will be carried off by steam or settled in boiler drum?

h) Why a steel chimney is particularly favoured in the case of gas turbine power plants?

i) During steam raising; what precautions should be taken for non-drainable super- heater?

j) One of the stack purposes is to disperse the flue gases. If a stack height is limited for some reason; how the flue gases are dispersed properly, and how is any additional draft loss accounted for?

SECTION – B
(Attempt any THREE questions)

3. (a) 18.9 tons per hour of steam at 4.13 MPa is generated at 80% efficiency in pulverised coal fired boiler hooked up with continuous blowdown (CBD). The blowdown rate is 5%. Compute the heat loss per ton of blowdown. Compare this loss to savings from heat recovery system as shown in Fig. 1. Other relevant data are as follows:

Ambient makeup water temperature 294 K

Flash tank operating pressure	70 kPa
Percent of boiler blowdown flashed	28%
Blowdown temperature at BFW preheater outlet	322 K
Fuel cost	Rs 60 per GJ

(10)

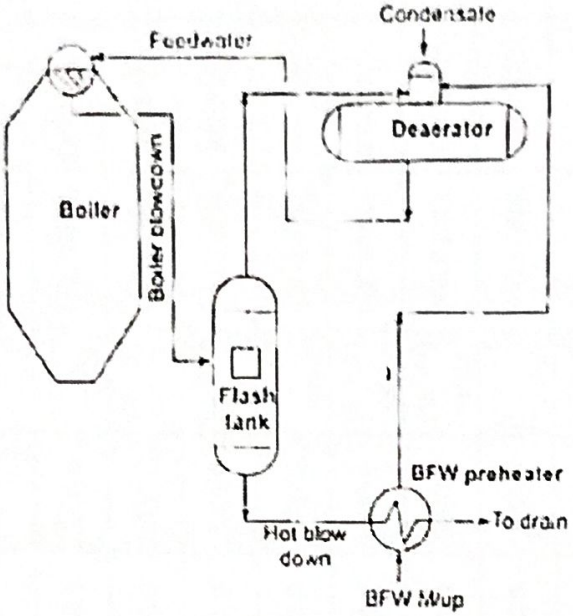

Fig. 1

(b) What factors control the design of the boiler proper? (10)

4. (a) List and describe in detail the most common non-destructive tests that are being used in boiler internal inspection. (10)

(b) What are the benefits of pilot operated safety valves as compared to spring loaded safety valves? (10)

5. (a) Explain with the help of neat sketch, the purpose, working and types of dry scrubbing systems along with their advantages over wet scrubber. (15)

(b) What steps precede internal inspection of boiler? (5)

6. (a) In which cases a boiler must be shut-down immediately? (10)

(b) A boiler consumes 25 tons of coal per hour. The flue gases temperature is 575 K while the ambient air temperature is 300 K. If the draught produced by a 40 m high concrete chimney is 20 mm of water. Calculate (i) the air supplied per ton of coal burnt, (ii) draught (draft) in terms of hot flue gas, (iii) the flow rate of hot flue gas through the chimney, (iv) the velocity of flue gas in the chimney and (v) the diameter of the chimney at the base. Assume 0.0666 times the draught is available for producing the velocity. (10)

BOILER OPERATION ENGINEERS EXAMINATION – 2019

Machine Drawing (Paper- III)

Time: Two Hours **Maximum Marks: 100**

NOTES TO THE CANDIDATES:

- Write your name and roll no. on the question paper. Do not write or mark anything else on the question paper.
- Section-A consisting of FOUR questions and all are COMPULSORY. Candidates may attempt any ONE question out of two questions from Section-B. The dimensions are shown in mm in all the figures.
- Answers in brief and to the point will attract more marks. Draw neat sketches wherever necessary.
- Assume missing data suitably, if any. Also assume suitable scaling wherever necessary.
- If more questions are answered, the last extra answers will be ignored.
- Candidate should answer the paper in ENGLISH only and in legible handwriting.
- This Paper contains TWO pages and total SIX questions.

Section A

Q. 1 (5×4)

(a) Distinguish between Caulking and Fullering? Explain with the help of neat sketches.

(b) What are the various methods of stopping the bolts from rotating in bolt holes, while tightening the nuts?

(c) What is the function of safety valves? List commonly used safety valves with their specific usages.

(d) Distinguish between boiler mountings and boiler accessories. Name any four boiler mountings and accessories.

Q. 2 Draw the top and front views of a double riveted butt joint with double cover plates, showing the zig-zag arrangement of rivets in the rows. Take the thickness of the butting plates as 12 mm and the nominal diameter (*d*) of the rivet as 20 mm. Show the calculations and dimension your drawing. (15)

Q. 3 Draw the front view, top view and right side view of the object; shown in Figure 1. (15)

Q. 4 Draw the symbols and drawing representations of following welding/other operations: (2.5×8)
(i) Weld all around (ii) Site weld (Assembly weld) (iii) Site weld (Erection weld) (iv) Flush Contour (v) Convex Contour (vi) Chipping Finish (vii) Grinding Finish (viii) Machining Finish

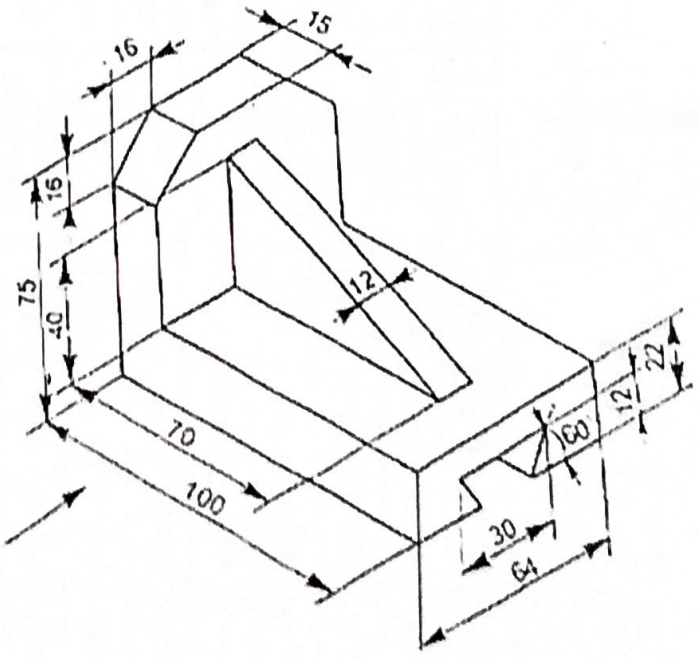

Figure 1

Section B

Q. 5 Figure 2 shows an isometric view of a Bushed Bearing. Draw: (a) Front view, right half in section (b) End view, left half in section. (c) Top view. (30)

Q. 6 Figure 3 shows the details of a Gib and Cotter Joint. Draw following views of the joint with the parts assembled in their working: (a) Front view upper half in section (b) Top view or plan (c) Side view. (30)

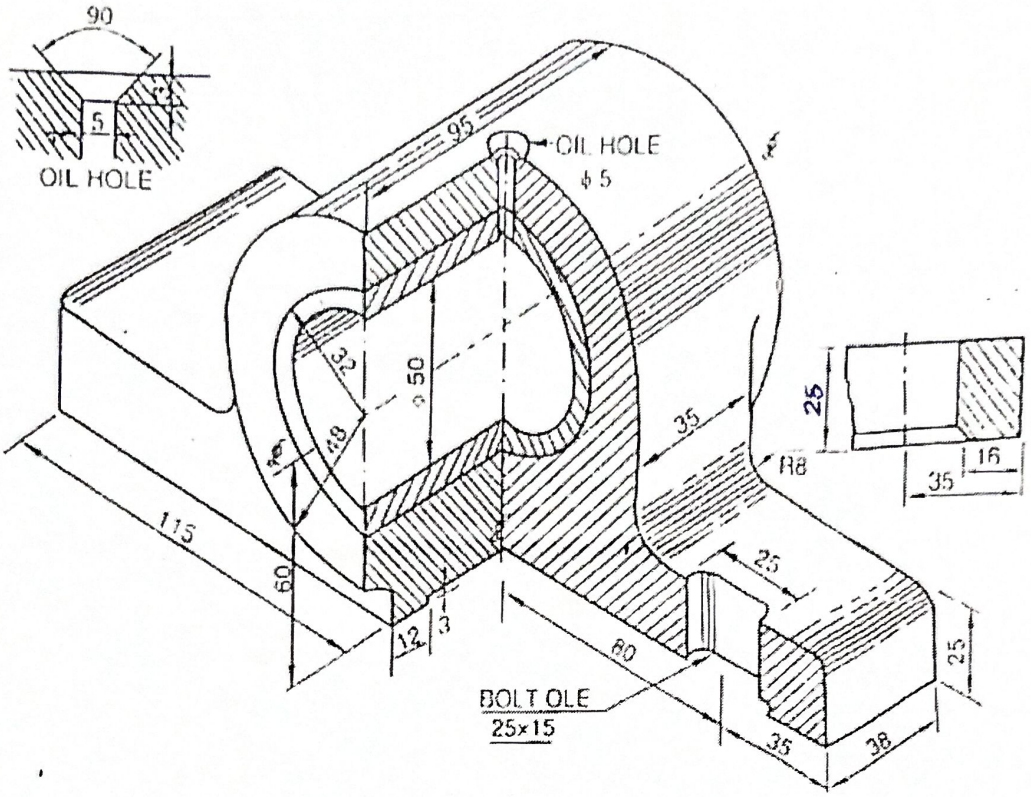

Figure 2

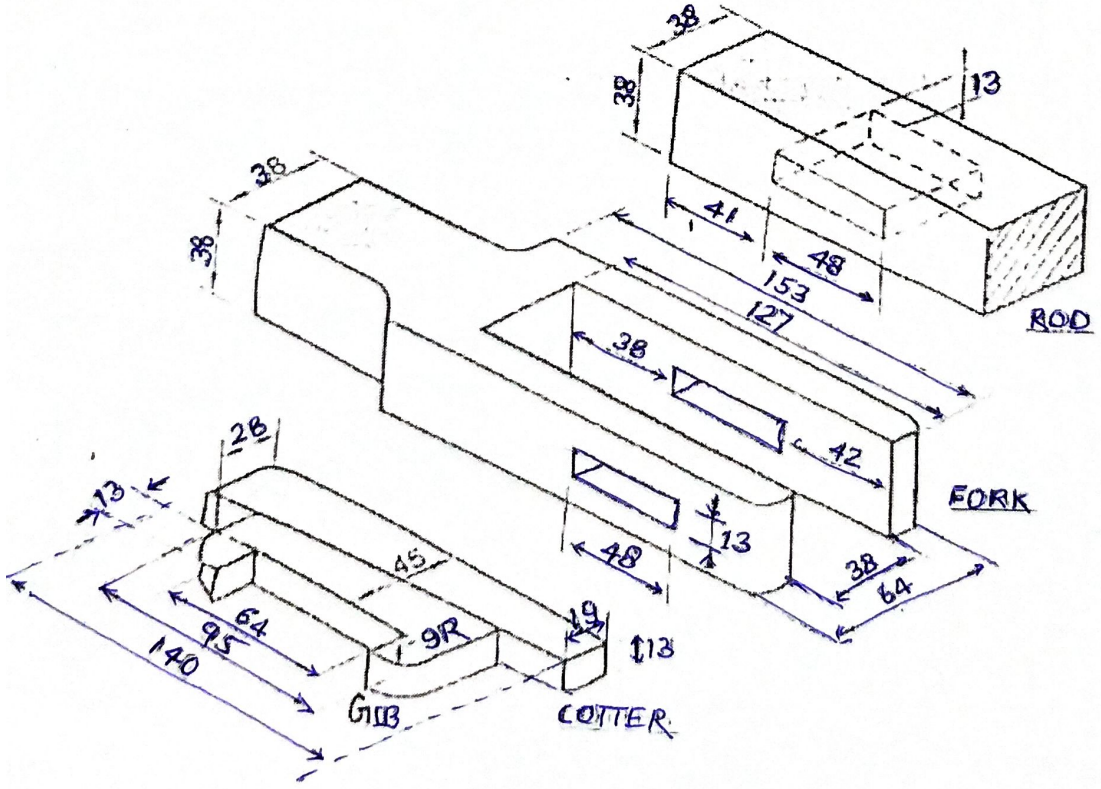

Figure 3