Study Material For Boiler Operation Engineer (BOE) Exams

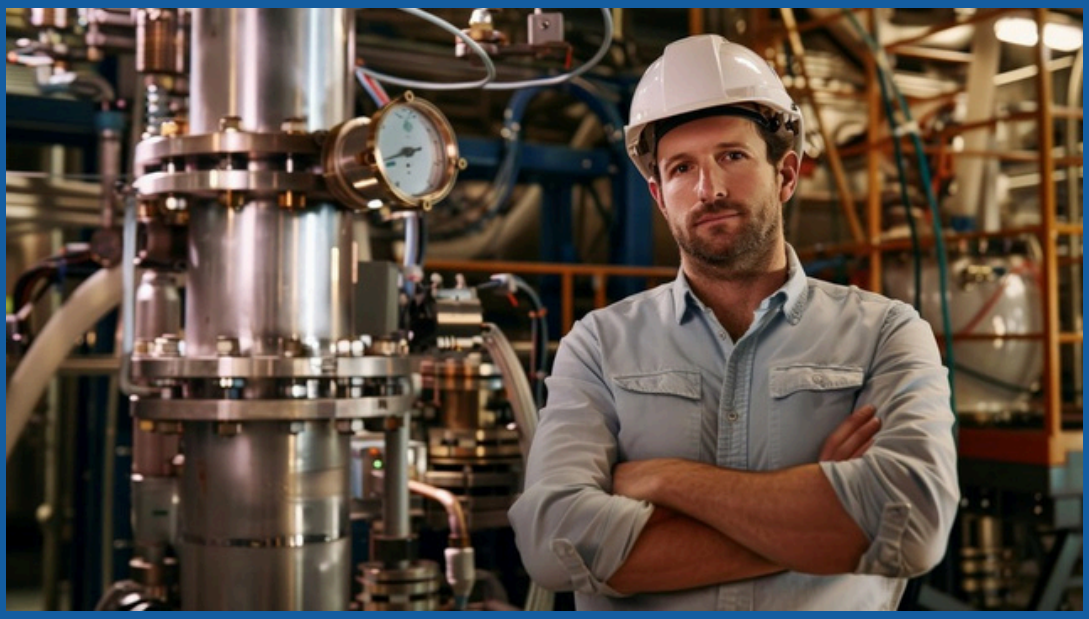

Theory, Numerical Problems, MCQs and Boiler Drawing Problems from BOE Exams

Amazon Flipkart Pothi

PROENGR.IN

SUDESH K JAIN

BOILER OPERATION ENGINEERS EXAMINATION-2017

Boiler-1

Time: 2.5 hrs. **Max. Marks: 100**

Note:

1. Candidates should attempt SIX (6) questions subject to alternative or limitations, if any, mentioned herein or in each question. If more questions are answered, the last extra answers will be ignored.
2. Parts of the same questions must be answered together and must not be interposed by answer(s) to other question(s).
3. Question No. ONE is Compulsory.
4. Candidates should answer the paper in ENGLISH only.

***

1. Answer all the Questions 10x1=10

(A) Why mountings are essentials in boiler?
(B) What is the utility of economizer in boiler plant?
(C) The function of blow off cock in the boiler is to ..... from the boiler.
(D) A ..... boiler is best suited to meet the fluctuating demand of steam.
(E) The quantity of steam generated by boiler at full load is called ..... of the boiler.
(F) The evaporation of 15.653kg of water per hour from and at 100 ^{0}C is called .....
(G) Fusible plug is fitted in the boiler to .....
(H) A supercritical boiler has a pressure range of .....
(I) Mollier diagram is plot between ..... and .....
(J) The process of superheating follows ..... law.

1.1 What is meant by co-generation? 2
1.2 Sketch Rankine cycle for steam plant in which the boiler generates the superheated steam. 2
1.3 What are the major constituents of coal? 2
1.4 Mention the various types of boiler furnace. 2
1.5 What do you mean by priming and foaming? 2

2 (A) Discuss the working principle of supercritical boiler. What are the advantages of supercritical boiler? 5
(B) Classify the steam generators on the basis of nature of service. 5
(C) Discuss the working principle of natural circulation modern power boiler. 6

3 (A) Explain the purpose of steam drum in boiler. 5
(B) Discuss the advantages of high pressure boiler. 5

(C) Discuss the advantages and disadvantages of Fluidized Bed Combustion Boilers. 6

4 (A) Discuss the various types of air preheaters. 5

(B) What are the factors required to be considered for installation of boiler in industry? 5

(C) What is a cyclone furnace? Where it is used? Mention its advantages and disadvantages. 6

5 (A) Discuss the merits and demerits of forced draught over induced draft. 5

(B) What are the major differences between mounting and accessories? Give three examples of each. 5

(C) What are the advantages of preheating the air? Draw a neat diagram of tubular air preheater. 6

6 (A) Define calorific value of fuel. Differentiate between HCV and LCV of fuel and state which value is used in calculation and why? 6

(B) The fuel sample has the percentage analysis by mass as follows 10
C = 81%, H_2 = 5%, O_2 = 5%, Moisture = 2% and Ash = 7%. Calculate the theoretical minimum air required for complete combustion of fuel. Also calculate the volumetric analysis of dry flue gases. If actual air supplied is 16kg per kg of fuel. Assume that 80% of carbon is brunt to CO_2 and remaining to CO and hydrogen from the fuel burns completely.

7 (A) What are the various flue gas cleaning devices? Explain the working principle of Electrostatic precipitator. 6

(B) A tubular type air preheater is to be designed for a modern boiler where the hot flue gases of mass flow rate 1350kg/s enters the preheater at 450 ^{0}C and leaves the preheater at 160 ^{0}C. The air enters the preheater at 35 ^{0}C and flows over the tube at rate of 1200kg/s. The inlet velocity of flue gases is 12m/s and the tubes have internal diameter of 60mm and external diameter is 65mm. If the overall heat transfer coefficient is 30 W/m^2. Calculate the no. of tubes and length of tubes. Assume for flue gases c_p = 1.1KJ/kgK ,R = 0.287KJ/kgK and for air c_p = 1.005KJ/kgK. 10

8 Write short notes on any Four of the below 4x4=16

(A) FGD-Fluid gas de-sulphurisation.

(B) Heat absorption in super-heater and Re-heater.

(C) Boiler make up and feed-water treatment.

(D) Boiler feed pump.

(E) Pulverized coal firing system.

(F) Pressurized fluid Bed combustion.

BOILER OPERATION ENGINEERS EXAMINATION – 2017

BOILER – 2

Time: 2.5 Hours **Maximum Marks: 100**

Notes to the candidate:

a) Question No. **1 (ONE)** is compulsory.

b) Candidate should attempt **SIX (06)** questions in **ALL**, subject to alternative and limitations, if any, mentioned herein or in each question. If more questions are answered, the last extra answers will be ignored.

c) All parts of the one/same question must be answered together and must not be interposed by answer(s) to other question(s).

d) Candidate should answer the paper in **ENGLISH** only and in legible handwriting.

e) This Paper contains three (03) pages and nine questions (09).

1. Answer all the Questions: **(10 × 1 = 10)**

a) What do you mean by Free Swelling Index of coal and explain its significance?

b) What is the standard scale of specific gravity of fuel oils? Also state its standard range of variation?

c) What is sludge and briefly explain the technology by which its combustion is materialised.

d) Write the purpose and principle of Simpliport Bicolour Gauge briefly?

e) What is caustic embrittlement and under what conditions it occurs?

f) What is the purpose of Zeolite in boiler operation? Explain briefly.

g) _____ and _____ are used to evaluate integrity of tubes in a steam plant equipment.

h) What is Boilout of a boiler and how it is accomplished?

i) Define and classify Attemperation.

j) What is the purpose of classifier in a pulveriser?

1.1 Define and categorize Coal Beneficiation process. **(02)**

1.2 Write down the affect of key fuel properties on the pulveriser fuel processing capacity. **(02)**

1.3 Explain methods of air and water leakage detection in condenser tubes. **(02)**

1.4 State with reason the most prominent advantage and disadvantage of hyperbolic shape of cooling tower. **(02)**

1.5 Draw T-x relationship for condenser & cooling tower performance. **(02)**

2. (a) Explain in detail the American Society of Testing and Materials (ASTM) Laboratory procedure for proximate analysis of coal? Also write the related ASTM standards. **(10)**

Scanned by CamScanner

(b) Explain the working mechanism of cyclone steam separator. **(06)**

3. (a) Explain with the help of neat sketch, the purpose and working of Mechanical Centrifuge. **(10)**

   (b) What are accelerators and inhibitors? Write down the steps for chemical cleaning of the boiler. **(06)**

4. (a) Explain with the help of diagram, the working of spray tray type deaerating heaters. **(08)**

   (b)What are two primary control requirements of a combustion process in a boiler? Explain with the help of diagram, how gravimetric feeder is used in controlling the combustion process. **(08)**

5. (a) Explain the parameters which affect the particulate removal efficiency of Electrostatic Precipitator. **(10)**

   (b) What do you understand by water cooled and refractory-lined furnaces? State with reason, why are the water-cooled furnaces are being preferred over the refractory-lined furnaces? **(06)**

6. (a) Write down the necessary steps required to be taken before placing a boiler in service. Describe also the procedure used for returning an idle boiler to normal operation. **(08)**

   (b) What is water softening and why it is required in boiler operation? State various methods of it. Explain any two methods in details. **(08)**

7. (a) Define and Classify Fabric Filters. List out and explain the reasons of preferences of fabric filters over Electrostatic Precipitators. **(08)**

   (b) Feed-water from high pressure heater enters the inlet header of the economizer at the rate of 600 kg/s and is at 140 bar. It is heated by flue gases till it becomes the saturated liquid and leaves the outlet header at 170 °C to inflow into the drum. Flue gases flow over the economiser oils at the rate of 1250 kg/s and leaves at 450°C. To restrict the erosion rate by fly ash, the flue gas velocity should not exceed 12 m/s, while the optimum water velocity leaving the coils is 1.2 m/s. The outer and inner diameters of the tubes are 70 and 60 mm respectively. The overall heat transfer coefficient may be taken as 70 W/m^{2}K. Determine the number of coils needed in the economiser and length of one coil. If the vertical pitch of coil is 80 mm and clearance on the two side of duct of width 4.8 m is 5 mm. Find the vertical height of the economiser coil. Assume C_p of the flue gases as1.12 kJ/kg-K; At 140 bar h_f = 1571.1 kJ/kg, t_{sat} = 336.75 °C, v_f = 0.001611 m^3/kg; At 170 °C h_f = 719.21 kJ/kg, v_f = 0.001114 m^3/kg **(08)**

8. **(a)** Steam leaves the drum of a boiler at a rate of 64 kg/s at 60 bar with 2% moisture. The feed-water from the economiser enters the drum at the rate of 62 kg/s and has 3 ppm. The make-up water at the rate of 2 kg/s is fed into the drum and it has 50 ppm. Effective steam washing reduces the solids in the moisture, leaving the drum with steam, to 5 ppm. If the solid concentration in the drum is to be maintained at 1000ppm, find **(i)** blow down required in kg/s, **(ii)** heat loss in the blow down as a percentage of total heat released in the furnace, if the blow down heat recovery is not used, when the fuel burning rate is 7 kg/s and its heating value is 23 MJ/kg, and **(iii)** deposition of scale in tube per kg/day. Assume the room temperature as 30^0C; At 60 bar h_f = 1213.35 kJ/kg; $h_{ambient}$ = 125.79 kJ/kg **(08)**

(b) Why pressurised circulating fluidised bed boiler are preferred over pressurised bubbling fluidised bed boiler. **(08)**

9. Explain the followings in detail: **(4×4)**

a) Drift Eliminator

b) Chemically Treated Water Suppressant

c) ASME Performance Test Code for:

- **i.** Determination of Particulate Matter in gas stream
- **ii.** Flue and Exhaust Gas Analysis
- **iii.** Purity and Quality Leak Detection and Measurement
- **iv.** Pressure Measurement

d) Credits

Boiler Operation Engineering Examination -2017
Drawing (Paper -3)

Max. Marks 100

Time: 2 Hrs.
Note: Please be specific towards your answers
Attempt all questions.

Q1.

a. Name the symbols shown in Figure 1 (7)
b. Name the various parts of the valve as shown in Figure 2 and Figure 3. (8)
c. Draw Sketches of the; Single pass, Two pass, Three pass and Four pass types of super heater coils. (5)

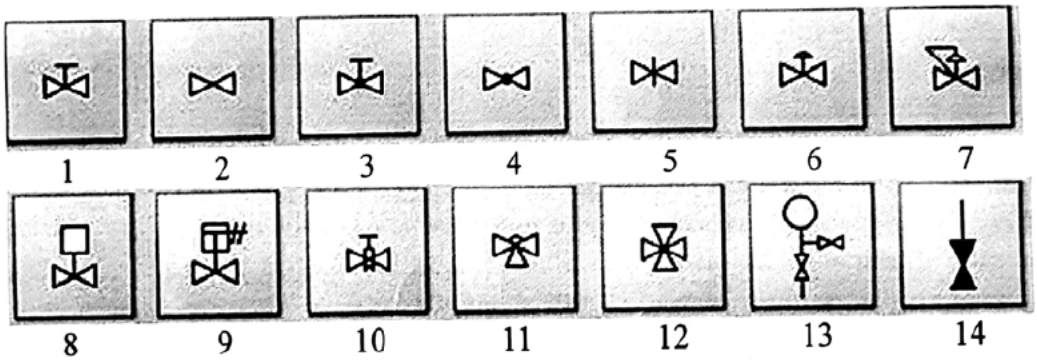

Figure 1

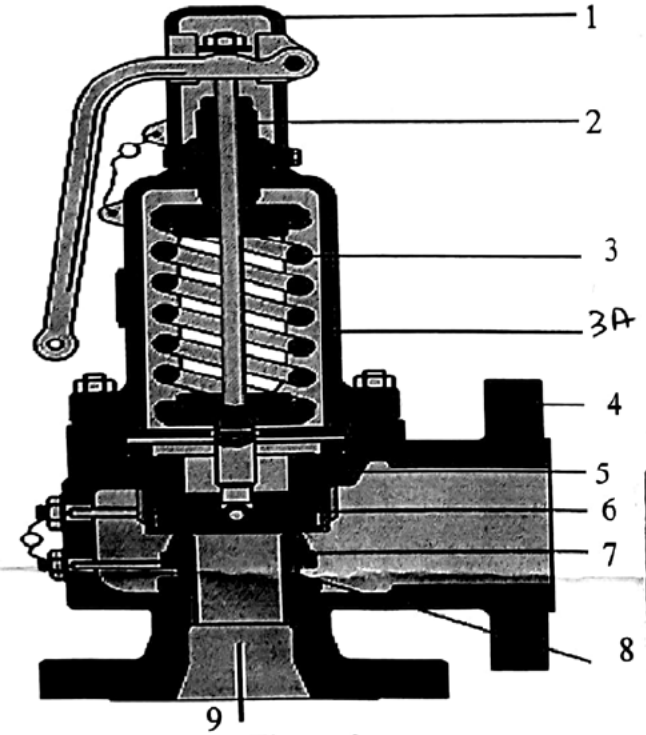

Figure 2

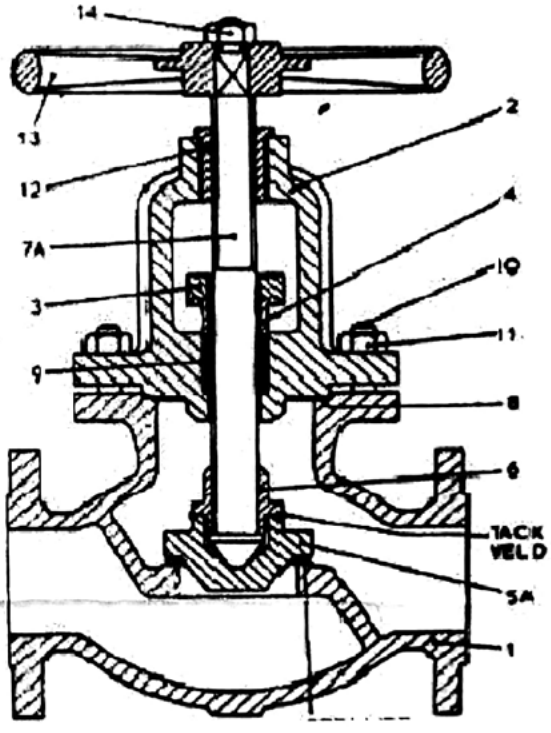

Figure 3

Q2.

a. Draw the proportionate free hand sketching of the double riveted zig zag lap joint. (12)

b. Name the following welded joints and draw their symbols. (8)

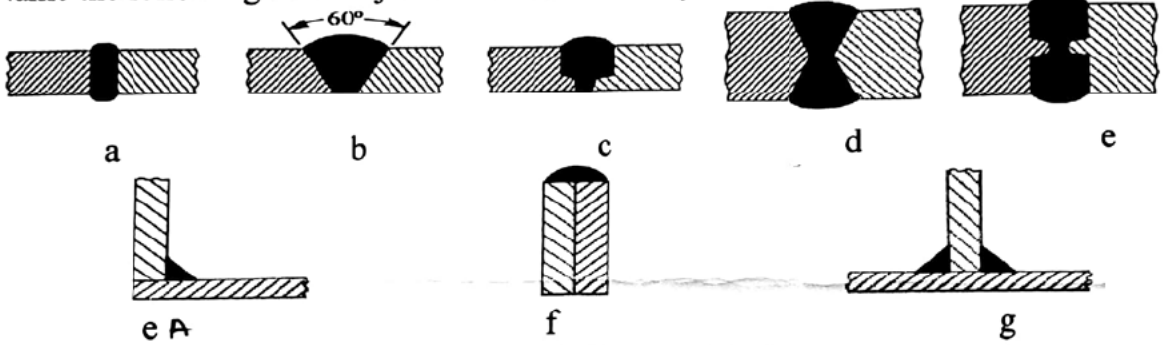

Q3. Make a neat sketch of the following and label all parts. (7+8)

a. Fusible plug

b. Bourdon type pressure gauge.

Q4.

a. Draw isometric scale for a length of 20 cm. (5)

b. Figure 4 represents the front view (FV), and top view (TV) of the object. Draw the isometric view and give all dimensions. (10)

Q5. Read the assembly drawing shown in Figure 5 and answer the following: (30)

1. What is the material of the spindle and what is its thread specification?
2. What is the total length of the spindle?
3. What is the thread size of the studs (13)?
4. What is the material of the gland? And what is its bore and height?
5. What are the flange bore and outside diameter?
6. What is the size of the hand wheel and its arm thickness?
7. What is the size of the spindle, where the hand wheel is fitted?
8. What is the pitch of the spindle thread and the depth?
9. What is the size of the slot in the valve that fits on to the spindle?
10. What is the taper on the valve seat?
11. What is the height of the stud nut?
12. What is the length of the stud (13)?
13. What is the thickness of the valve flange?
14. How many studs are there to fix the cover (9) and how they are located?
15. What is the bush height?

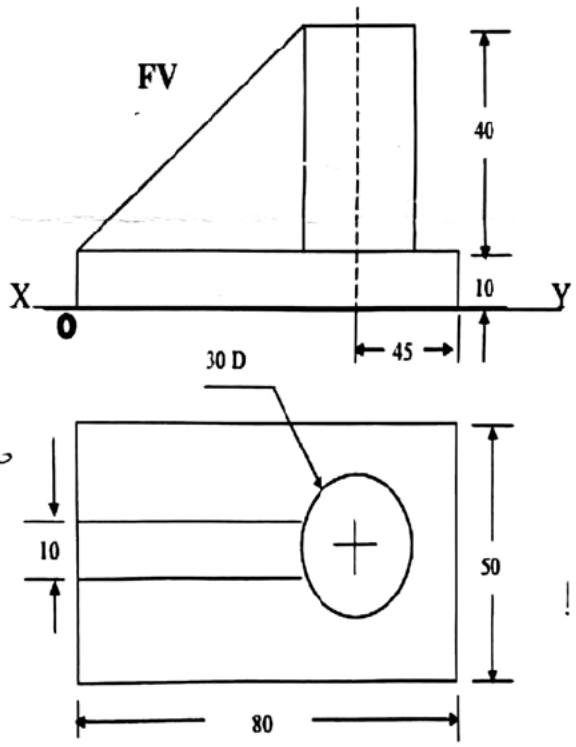

Figure 4

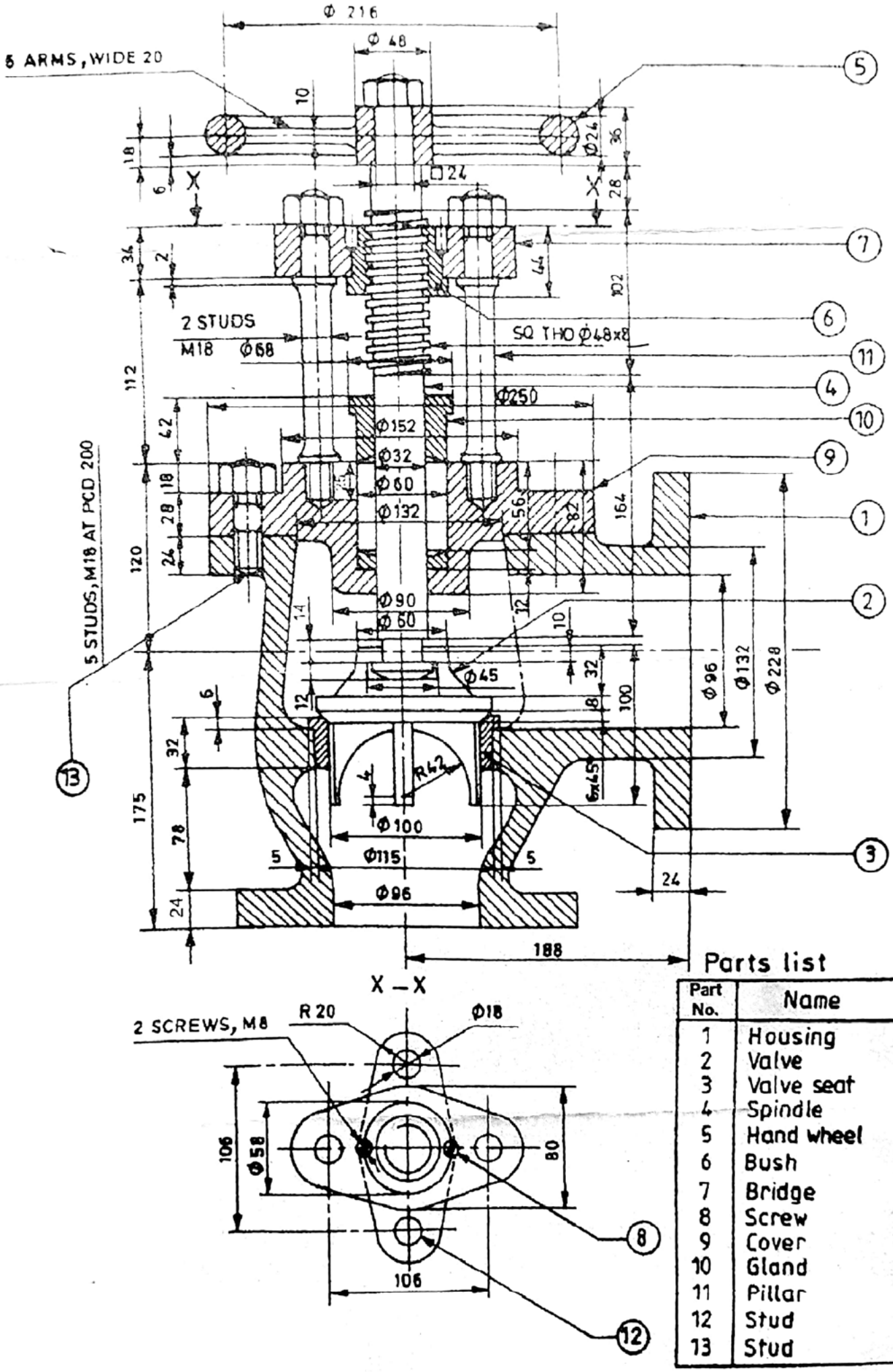

Parts list

Part No.	Name
1	Housing
2	Valve
3	Valve seat
4	Spindle
5	Hand wheel
6	Bush
7	Bridge
8	Screw
9	Cover
10	Gland
11	Pillar
12	Stud
13	Stud

Fig. 5 Steam stop valve