Study Material For Boiler Operation Engineer (BOE) Exams

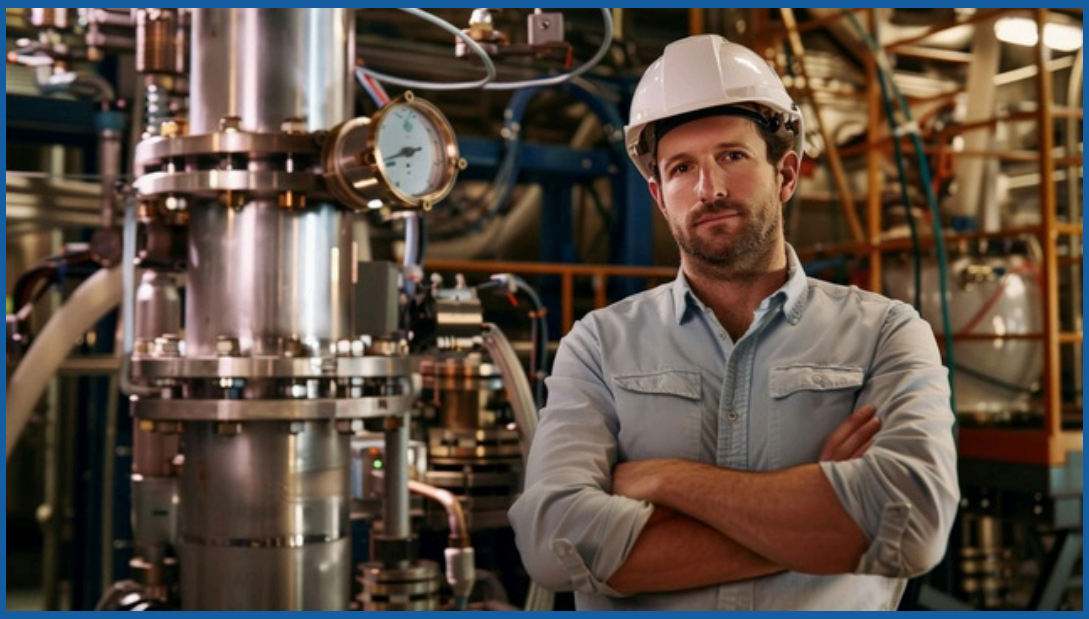

Theory, Numerical Problems, MCQs and Boiler Drawing Problems from BOE Exams

Amazon Flipkart Pothi

PROENGR.IN

SUDESH K JAIN

GUJARAT BOILER OPERATION ENGINEER EXAMINATION-2024
PAPER-1(BOILER ENGINEERING-1)

Time: 3.00 Hours **Max. Marks: 100**

SECTION-A

Instructions to Candidates:

1. Attempt all questions. Each question carries one mark.
2. Do not write or mark anything on the question paper and do not mark anything on answer sheet for identification purpose.
3. Do not rewrite full question. Only write down question number and correct answer.

Q.1: Attempt all questions. **[1x30=30]**

1. How many kg of CO_2 are produced in complete combustion of 16 kg of Methane?

a) 16	b) 42	c) 44	d) None of the above

2. The pH of feed water in which Hydrazine dosing is practiced.

a) Remains the same after and before dosing.	b) Increases after hydrazine dosing.
c) Decreases after hydrazine dosing.	d) Cannot be determined.

3. Stoichiometric air required for combustion of Bagasse is about

a) 3.2	b) 6	c) 13.7	d) 18

4. The enthalpy of steam at 170 degree Celsius with wetness fraction of 0.25 would:

a) Have enthalpy greater than steam at 170*C with dryness fraction of 0.50.
b) Have enthalpy lower than the enthalpy of saturated water at 170*C.
c) Have enthalpy lower than steam at 170*C with wetness fraction of 0.35.
d) None of the above.

5. Which of the following would have the maximum resistance of heat transfer to a steam pipe when indirect heating is carried out (the product and steam does not intermix)?

a) Air film	b) Scales	c) Condensate film	d) Metal thickness

6. The principle of Mechanical Deaeration is based on which of the following scientific laws?

a) Dalton's law of partial pressure	b) Henry's Law
c) Charles Law	d) Both A & B.

7. Which of the following is the most suitable candidates to act as Emergency Shutdown valve?

a) Butterfly valve	b) Gate valve	c) Globe valve	d) Both A & C

8. In which of the following units can be boiler's rating be described?

a) Kcal/hour(Rate of heat generation in furnace)	b) Kg of staem generated at specific pressure and temperature
c) MW of turbine capacity	d) All of the above

9. Boiler drum and other cylindrical component having internal diameter greater than 600mm shall be hydraulically tested at

a) 1.25times the maximum permissible working pressure	b) 1.5times the maximum permissible working pressure
c) 1.25times the maximum design pressure	d) None of the above

10. Safety valve having seat diameter not less than 32mm should reset at

a) At least 50% below but not more than 10% below safety valve set pressure
b) At least 2.5% below but not more than 5% below safety valve set pressure
c) At least 2.5% below but not more than 10% below safety valve set pressure
d) At least 1.5% below but not more than 5% below safety valve set pressure

11. Which is not required to calculate boiler efficiency by the indirect method?

a) Steam flow rate	b) Stack gas temperature

c) Ambient temperature	d) Energy content of fuel

12. The sulphur retention of Fluidised Bed Combustion boilers is dependent on

a) Temperature of Bed	b) Pressure of Bed
c) Porosity of sorption material employed	d) All of the above

13. Which of the following statement is wrong?

a) The mechanical draught reduces the height of chimney.
b) The natural draught reduces the fuel consumption.
c) A balanced draught is a combination of induced draught and forced draught.
d) All of the above.

14. Supercritical Boiler is

a) Fire tube boiler	b) Natural circulation boiler
c) Both A&B	d) Once through Boiler

15. Which of the following types of coal has most carbon content.

a) Lignite	b) Peat	c) Bituminous	d) Anthracite

16. Steam turbines are governed by the following methods

a) Throttling governing	b) Nozzle control governing
c) By pass governing	d) All of the above

17. Which material used in manufacturing of Economizer in Sub critical power Boiler.

a) SA 210 Gr-B	b) SA 213 T12/T23	c) SA 213 T-91	d) None of the above

18. What is the NOx dryness fraction(x) for saturated water, when water just start boiling?

a) X=0	b) X=1	c) X=0.9	d) X=0.5

19. The temperature at which a pure liquid transform into vapour at constant pressure is called as

a) Vaporization temperature	b) Saturation temperature	c) Normal temperature	d) None of the above

20. Short-term overheating usually exhibits:

a) Thin lip longitudinal rupture	b) Thick lips longitudinal rupture
c) Transverse cracks	d) Severe pitting

21. A 1 kg coal is having moisture 10gm, volatile matter 9.5gm, ash 11.6gm then % of C will be?

a) 68.9%	b) 62.1%	c) 63.1%	d) 80%

22. The following unit is not used to measure Turbidity of water

a) NTU	b) ATU	c) JTU	d) FTU

23. Corrosion resistance of steel increased by the addition of

a) Chromium and Nickle	b) Vanadium and Aluminium
c) Sulphur, Phosphorus & Lead	d) Chromium, Molybdenum, Vanadium & Tungsten

24. For Coal fired Boiler the Flame length is influenced by

a) Moisture	b) Volatile Matter	c) Fixed Carbon	d) Ash in fuel

25. During hot banking/Box up, boiler kept in

a) Depressurized Condition	b) Slow firing condition
c) High air flow condition	d) Pressurized Condition

26. The draught (in mm of water) for maximum discharge of flue gases through the chimney, is given by (where H=Height of the chimney in meter and T1= Absolute temperature of air outside the chimney in K).

a) T1/88.25H	b) 88.25H/T1	c) T1/176.5H	d) 176.5H/T1

27. For burning 1 kg of carbon to CO as per chemically correct combustion , amount of air required is

a) 1kg	b) 4/3kg	c) 8/3kg	d) 2kg

28. In a heat exchanger with steam outside the tubes, a liquid gets heated to 45*C, when its flow velocity in the tubes is 2m/s. If the flow velocity is reduced to 1m/s, other things remaining the same, the temperature of the exit liquid will be,

a) Less than 45*C	b) More than 45*C
c) Equal to 45*C	d) Initially decrease and remains constant thereafter.

29. The Efficiency of collection in ESP will……..if the resistivity of the fly ash increases

a) Increase	b) Remain the same
c) Decrease	d) First decrease then increase

30. The normal velocity encountered in pipes for saturated steam is

a) 60-80m/s	b) 10-30m/s	c) 5-10m/s	d) 30-40m/s

SECTION-B

Instructions to Candidates:

1. Attempt all questions. Figures to right side of question indicates individual marks.
2. Do not write or mark anything on the question paper and do not mark anything on answer sheet for identification purpose.
3. Make suitable assumption if required with justification.
4. Use of scientific calculator is permitted.
5. Draw neat sketches wherever it is required. Write next question on next page.

Q.2: Answer any FOUR of following. [4x5=20]

Q.2(A): Boiler Blow down condensate is available at 100bar g. It is allowable in a flash steam recovery vessel which operates at 10bar g. If the blow down rate is at 4TPH.
Calculate:
1. Percentage of Flashing.
2. Quantity of Flash steam produced.
3. Quantity of condensate generated.

Q.2(B): The ratio of the base radius and height of a cone is 5:12. If the area of the base cone is 616cm^2, fin the curved surface area of cone without base area.

Q.2(C): A power station has overall efficiency of 30%. Calculate, how many kWh of electricity will be produced by 1 ton of 5000 kcal/kg calorific value?

Q.2(D): Steam is generated in a boiler at 110kg/cm^2 and 520*C. Assume drum pressure is 118kg/cm^2. Using steam table, find:
1. Saturated steam temperature.
2. Degree of superheat.
3. Enthalpy of steam.

Q.2(E): Draw a single line diagram of steam condensing power plant showing each and every equipment with name as well as flow direction of steam and water.

Q.3: Attempt any TWO of following. [2x10=20]

Q.3(A): A solid fuel contains 74% carbon and 16% ash. The ash discharged from furnace contains 20% carbon. Calculate:
1. The weight of carbon lost in the ash per kg of fuel.
2. The percentage carbon burned.
3. The heat lost by the incomplete combustion.

Q.3(B): Calculate and size Boiler Feed Water pumps for a typical Coal fired Boiler generate steam of 50,000kg/hr at 67kg/cm^2 and 485*C. Feed water inlet at 105*C and Exhaust gas temperature at 150*C.

Q.3(C): A boiler produces 220 t of dry saturated steam per hour at a pressure 60kg/cm^2 abs. from feed water at a temp 120*C, coal consumption=1200t/day, Calofiric value of coal=4200kcal/kg, 1% coal escapes unburnt, Determine:

1. Equivalent evaporation per ton of coal fired.
2. Efficiency of the boiler.
3. Overall efficiency of the boiler.

Q.4: Attempt any TWO of following. **[2x10=20]**

Q.4(A): The following observations were taken during a performance trial of boiler:

Temperature of steam leaving super-heater: 250*C
Steam pressure: 10 Kgf/cm^2(g)
Feed water temperature leaving economizer: 80*C
Dryness fraction of steam leaving boiler drum: 0.95
Feed water temperature entering economizer: 25*C
Quantity of coal: 750kg/hr
Feed water supplied/hour: 7000kg(CBD & IBD loss is zero)
Calorific value of coal fired: 8100Kcal/kg

Determine:

1. Thermal efficiency of boiler.
2. % Heat absorbed by feed water in Economizer.
3. % Heat absorbed in drum/ Water wall.
4. % Heat absorbed in superheater.

Q.4(B): Calculate thermal efficiency of two boiler having the following data: (SI Unit).

Boiler-1 (Coal Fired)	Steam pressure: 14bar(abs)
	Steam produce/kg of coal: 10Kg
	Quality of steam: 0.9
	Feed water temperature: 27*C
	CV of coal: 34x10^3 KJ/kg
Boiler-2 (Oil Fired)	Steam pressure: 14bar(abs)
	Steam produce/kg of oil: 14Kg
	Quality of steam superheated: 240*C
	Feed water temperature: 27*C
	CV of coal: 46x10^3 KJ/kg

Q.4(C): In a surface condenser, the vacuum maintained is 700mm of Hg. The barometer reads 754mm of Hg. If the temperature of condensate is 18*C, Calculate:

1. Mass of air per Kg of steam.
2. Vacuum Efficiency.

Q.5: Attempt any TWO of following. **[2x5=10]**

(A): List down in details Major advantages of FBC Boiler System.

(B): Enlist tips to improve steam power Efficiency.

(C): What is Clinker? Why clinker is formed during AFBC start up?

GUJARAT BOILER OPERATION ENGINEER EXAMINATION-2024
PAPER-2(BOILER ENGINEERING-2)

Time: 3.00 Hours **Max. Marks: 100**

SECTION-A [70 MARKS]

QUESTIONS ARE NOT AVAILABLE BECAUSE MCQ QUESTION PAPER TAKEN BACK BY THE EXAMINER.

SECTION-B

Instructions to Candidates:

1. *Attempt all questions.*
2. *Draw neat sketches wherever necessary.*
3. *Figures to the right indicate full marks.*

Q.2.1: What do you understand by supercharged boilers? Explain the working with neat diagram. What are its advantages over conventional boilers? [10]

Q.2.2: Describe details mentioned in working certificates of boiler issued by inspecting authority after annual inspection. (Reverse side also). [10]

Q.3: What is Boiler PG Test and when it will done? Describe Boiler PG test in detail with all parameters which are measured during this test. [20]

Q.4: Answer the following questions. (Any FIVE). [4x5=20]

1: What are the merits of VFD application in case of pumps?
2: Explain the phenomenon of water hammer in steam system and how it can be eliminated?
3: What is “Insulation”? List some of the common insulators used in industries. What are the benefits of thermal insulation?
4: Briefly explain the principle involved in “reverse osmosis”?
5: What is the effect of boiler loading on boiler efficiency?
6: How chimney height and area affect the on boiler combustion. What is the formula for minimum chimney height as per GPCB?

Q.5: Give reason(s) and action(s) to be taken for following boiler operational problems. [10]

(a) Gas explosion in boiler.
(b) Boiler furnace overpressure.
(c) Flame failure.
(d) Tripping of ID & FD fan.
(e) Increase in superheat steam temperature.

GUJARAT BOILER OPERATION ENGINEER EXAMINATION-2024
PAPER-3(ENGINEERING DRAWING)

Time: 3.00 Hours **Max. Marks: 100**

SECTION-A [20 MARKS]

QUESTIONS ARE NOT AVAILABLE BECAUSE MCQ QUESTION PAPER TAKEN BACK BY THE EXAMINER

SECTION-B

Instructions to Candidates:

1. *Attempt all questions. Figures to right indicates individual marks.*
2. *Do not write or mark anything on the question paper.*
3. *Dimension are in mm otherwise specify if required.*
4. *Make suitable assumptions if required and justify.*
5. *Draw as per the scale mentioned in the questions.*

Q.2: Draw any TWO of the following. **[2x20=40]**

Q.2(A): Draw the Isometric projection of the vertical condensate cylindrical tank of size: 1500 OD and height of 3500. Also show man hole of the size 500x500 at the centre of top plate of the tank. (Use the scale of 1:20).

Q.2(B): Draw using first angle projection method, the plan and elevation views of the Support Bracket with respect to X directions as shown in the figure, (Using the scale of 1:1).

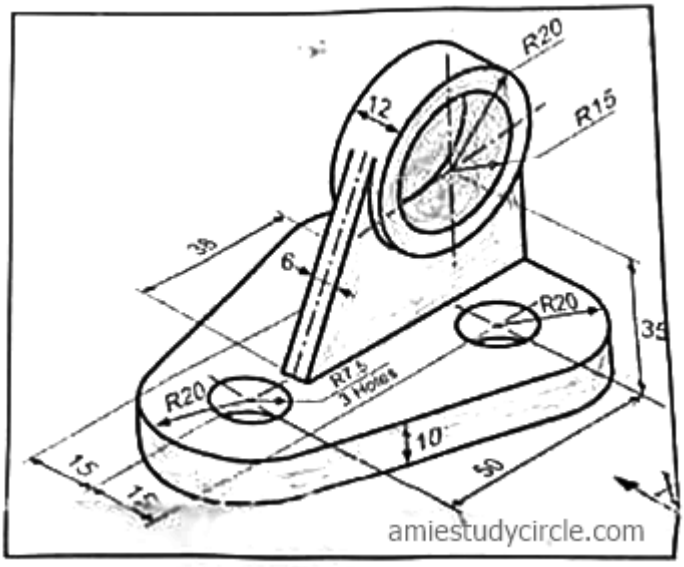

Q.2(C): Draw the Tori spherical dished end for steam header with following dimensions. Outside diameter=200, Thickness=20, Knuckle radius=30, Straight Face=20, Crown Radius=160. (Use the scale of 1:1).

Q.3: Draw any TWO of the following. **[2x20=40]**

Q.3(A): Draw the swaged end of the tube with the following dimensions.

(i) Total length of the tube: 800,

(ii) Tube size is 60 OD x 5 Thk x 500L,

(iii) Swaged tube size is 55 OD x 4.5 Thk x 200L.

Suggest the suitable heat treatment for the tube after swaging is to be done. (Use the scale of 1:1).

Q.3(B): Draw elevation of finned tube for HRSG with following details:
Tube size: 80 OD x 4.0 Thk x 500L.
Fins are CS plain solid circular. Fins OD 120, Fins thickness 2, pitch of the fins 8.
Finned tube length=312, plain tube without fins =94 for both ends. (Use the scale of 1:2).
Q.3(C): Draw the details for the following butt-welding geometries with dimensions.
(i) Single V for 12 thick plates.
(ii) Double U for 20 thick plate. (Use the scale of 1:1).

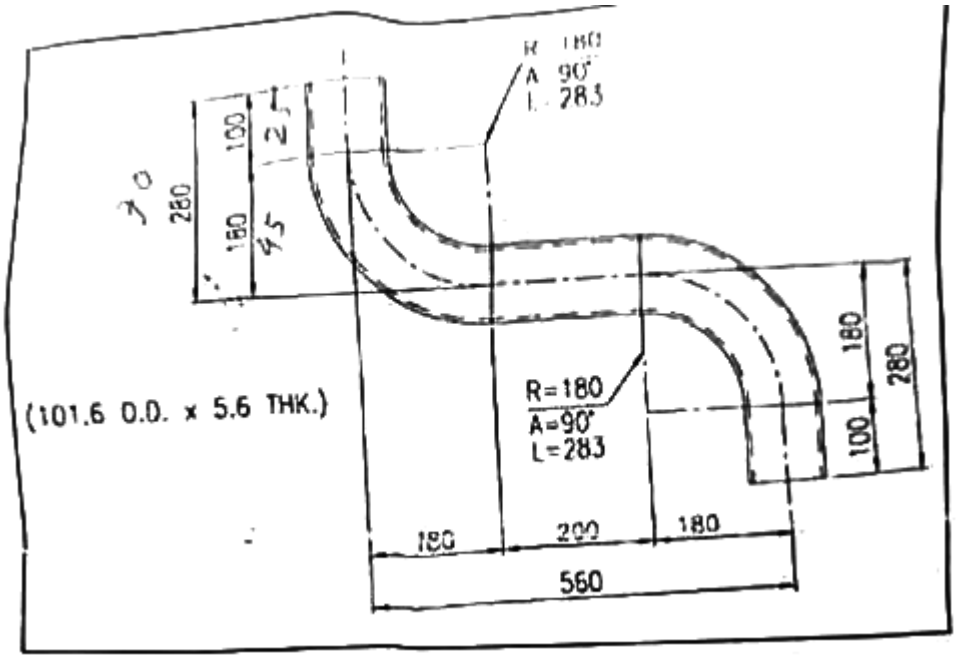

Q.4(A): Redraw the S Bend as shown in the figure.(Use the scale of 1:4). [10]

Q.4(B): Redraw the Typical Bend as shown in the figure. (Use the scale of 1:2). [10]

