Study Material For Boiler Operation Engineer (BOE) Exams

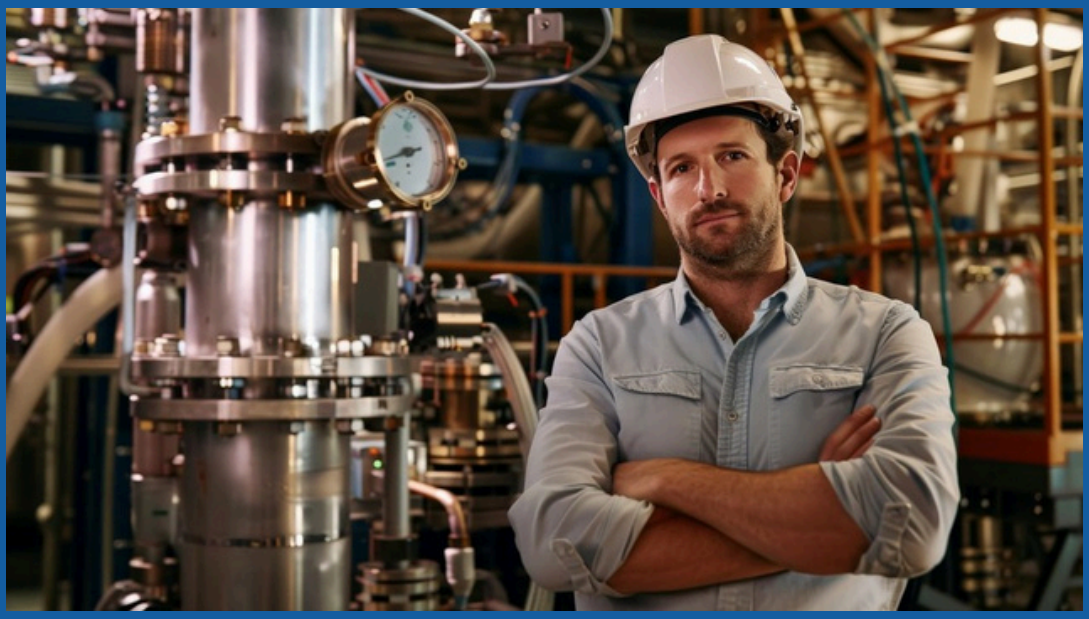

Theory, Numerical Problems, MCQs and Boiler Drawing Problems from BOE Exams

Amazon Flipkart Pothi

PROENGR.IN

SUDESH K JAIN

GUJARAT BOILER OPERATION ENGINEER EXAMINATION-2023
PAPER-1(BOILER ENGINEERING-1)

Time: 3.00 Hours **Max. Marks: 100**

SECTION-A (MCQ)

Instructions:

1. Attempt all questions. Each question carries one mark.
2. Do not write or mark anything on the question paper and do not mark anything on answer sheet for identification purpose.
3. Do not rewrite full question. Only write down question number and correct answer.

Q.1: Answer all questions. **[30x1=30 Marks]**

1. Work done in a free expansion process is ……..

A. Maximum	B. Minimum	C. Positive	D. Zero

2. What is the unit of Heat Rate …….

A. KJ/KW	B. KW/KJ	C. KJ/KWH	D. KWH/KJ

3. What is the most preferable dryness fraction of the exhaust steam for modern steam turbine?

A. 0.99	B. 0.77	C. 0.66	D. 0.88

4. 1Kg-m is equal to

A. 9.81 Joule	B. 120 Joule	C. 427 Joule	D. 4.81 Joule

5. The actual vacuum in condenser is equal to …….

A. Barometric Pr. + Actual Pr.	B. Barometric Pr. - Actual Pr.
C. Gauge Pr. + Atmospheric Pr.	D. Gauge Pr. – Atmospheric Pr.

6. O_2 content in atmospheric air on weight basis is ……..

A. 21%	B. 30%	C. 23%	D. 79%

7. The relief valve of economizer should have a minimum diameter of ……..

A. 19.0mm	B. 32.5mm	C. 50.8mm	D. 63.5mm

8. What is the cycle of concentration if the chloride content of boiler water is 186ppm and the feed water chloride content is 38ppm?

A. 4.89	B. 7068	C. 148	D. 0.204

9. Which of following is considered general purpose welding electrode?

A. E-6013	B. E-7018	C. E-8018 B2	D. E-9015 B9

10. Priming in boiler drum is due to……

A. High drum level	B. Improper design/Construction of boiler
C. Sudden fluctuation in steam demand	D. All of above

11. In the case of Boiler fitted with integral super heater an additional safety valve shall be fitted…….

A. At the end of super heater outlet
B. In between drum outlet and super heater inlet
C. On top of drum
D. At economizer outlet line

12. Thinning on tube bends shall comply with the following. Where R=Mean Radius of bend, D=Outside Diameter of tube.

A. 100/[(4R/D)+2]	B. 100/[(4D/R)+2]
C. 100/[(2R/D)+4]	D. 100/[(2D/R)+4]

13. Because of internal construction of a Boiler such that it does not permit the competent person getting inside it for examining closely all its parts, he shall test it by hydraulic pressure to

A. 2 times to working pressure	B. 1.25 times to design pressure
C. 1.5 times to working pressure	D. 1.5 times to design pressure

14. Minimum two feed apparatus shall be provided for Boiler where heating surface area exceeds.

A. $15m^2$	B. $25m^2$	C. $10m^2$	D. $20m^2$

15. One Kg of carbon produces .....kg of carbon dioxide.

A. 3/7	B. 4/11	C. 11/3	D. 11/7

16. The velocity of flue gases (V) through the chimney under a static draught of (H') meters is given by.

A. V=2gH'	B. V=2g/H'	C. V=h"/2g	D. V=2H'/g

17. Cation Exchanger resin is denoted as ……

A. $R(OH)_2$	B. RH_2	C. ROOH	D. RCOH

18. The low combustion temperature in FBC Boilers results in minimal formation of …….

A. SOx	B. NOx	C. CO_2	D. CO

19. The chimney draught varies with……

A. Climate condition	B. Temperature of furnace gases
C. Height of chimney	D. All of the above

20. With increase in load, convection super heater has…

A. Drooping characteristics	B. Linear characteristics
C. Rising characteristics	D. Flat characteristics

21. What is the formula used to calculate the theoretical air required (in Kg) to burn one Kilogram of fuel?

A. $=4.35[(8/3C+9H_2+S)-O_2]$	B. $=4.35[(8/3C+8H_2+S)-O_2]$
C. $=4.35[(8/3Cx8H_2+S)-O_2]$	D. $=4.33[(8/3C+8H_2+S)-O_2]$

22. Which material used in water wall manufacturing of Supercritical Boiler…….

A. SA210 Gr-B	B. SA213 T12/T23	C. SA213 T91	D. AL 1301

23. The velocity of steam in steam pipe is directly proportional to ……..

A. Number of bends in pipe	B. 5th power of the diameter of pipe
C. Length of pipe	D. Specific volume of steam

24. The height of chimney in a power plant is governed by …….

A. The draft to be created norms	B. Sulphur in fuel
C. Temperature of flue gas	D. Ash in fuel

25. What is the pH of acid solution that is maintained during acid cleaning process of boiler?

A. pH(2-3)	B. pH(4-7)	C. pH(0)	D. pH(7-7.5)

26. Power required to drive a centrifugal pump is proportional to …….

A. Speed	B. N^2	C. N^3	D. $1/N^2$

27. Equation for Efficiency of ligament where p=Pitch of hole and d=Hole diameter is ……

A. (d-p)/p	B. (p-d)/d	C. (p-d)/p	D. All of above

28. During hydraulic test of Boiler, the temperature of water used shall not be

A. Less than 15*C and more than 45*C
B. Less than 20*C and more than 50*C
C. Less than 30*C and more than 40*C
D. Less than 10*C and more than 60*C

29. The rated discharge capacity of a safety valve which discharge saturated steam shall be calculated using the following equation.

A. E=CA/P	B. E=PA/C	C. E=PAC	D. P=ECA

30. In Gujarat state engraving of registration number for small industrial Boilers shall be carried out as per

	A.	GT-S ----------			B.	GTS- -------- 	
	C.	GT S- ---------			D.	GTS ----------	

SECTION-B (Numerical)

Instructions:

1. Attempt all questions. Figures to right side of question indicates individual marks.
2. Do not write or mark anything on the question paper and do not mark anything on answer sheet for identification purpose.
3. Mark suitable assumption if required with justification.
4. Use of scientific calculator is permitted.
5. Draw neat sketches wherever it is required. Write next question on next page.

Question No.2: Answer any FOUR of following. **[Marks: 20(5x4)]**

Q.2(A): Calculate the size of pipe required to transfer 100TPH of steam at 40 kg/cm^2 and 420*C. Velocity in the pipeline is to be maintained at 30m/sec.

Q.2(B): Calculate amount of heat required to produce 5Kg of steam at pressure 5 Bar. Feed water temperature is 20*C & steam is dry saturated.

Q.2(C): Carnot engine working between 377*C & 37*C produce 120kJ of work. Determine Engine thermal efficiency & heat addition in Kcal and KJ.

Q.2(D): The efficiency of a 100TPH, 80kg/cm^2, 520*C boiler is 82%. Calculate the quantity of coal required per day if the feed water inlet temperature is 120*C. makeup water is negligible and GCV of coal used is 3600kcal/kg. Calculate the evaporation ratio of the boiler.

Q.2(E): Steam at 100*C is added to ice at 0*C. Find the amount of ice melted and the final temperature when mass of steam is 10.0grams and the mass of ice is 50.0grams.

Question No.3: Answer any TWO of following. **[Marks: 20(10x2)]**

Q.3(A): Following readings are noted from a power plant Cooling Tower:

Cooling water flow: 1500m^3/hr.	Cooling water inlet temperature: 38*C
Cooling water outlet temperature: 30*C	Wet-bulb temperature: 27*C
Dry-bulb temperature: 45*C	TDS of cooling water: 1500ppm
TDS of make-up water: 250ppm	Evaporation loss: 2%
If Windage loss is negligible Then Calculate:	

(i) Approach, (ii) Range, (iii) Heat load of the cooling tower (iv) COC (Cycle of concentration), (v) Blow-down, (vi) Make-up water required.

Q.3(B): In boiler trial 1250kg of coal is consumed in a 24hours. The mass of water evaporated is 13000kg and the mean effective pressure is 7bar. The feed water temperature

is 40*C, heating value of coal is 30000KJ/kg. The enthalpy of 1kg of steam at 7bar is 2570.7KJ/kg. Determine:

(1) Equivalent evaporation per kg of coal.	(2) Efficiency of boiler.

Q.3(C): If a one ball of coal of 150cc volume brakes in to a small 150pcs of ball having a volume of 1cc of each ball, calculate how many times the surface area will increased and exposed to heat for combustion.

Q.4: Determine the height and diameter of the chimney used to produce a draught for a boiler which has an average coal consumption of 1800kg/hr and flue gases formed per kg of coal fired are 14kg. The pressure losses through the system are given below: **[Marks: 15]**

Pressure loss in fuel bed =7mm of water	Pressure loss in boiler tubes =7mm of water
Pressure loss in bends =3 mm of water	Pressure loss in chimney =1.3mm of water
Pressure head equivalent to velocity of the gases passing through the chimney =1.3mm of water	
The temperature of ambient air and flue gases are 35*C and 310*C respectively.	
Assume actual draught is 80% of theoretical one.	

Question No.5: Answer any THREE of following. **[Marks: 5x3=15]**

Q.5(A): Calculate tube plate thickness of shell type boiler having working pressure 14.00 Kg/cm^2 and diameter between staying points are:
1) Between stay tube, stay tube and shell =315mm.
2) Between gusset, gusset and shell =327mm.
3) Between gusset, stay and shell =300mm.
Consider C =coefficient =0.4 and F =stress = 1363kg/cm^2.

Q.5(B): Write down full form of the following abbreviation in connection with code and welding:

1) TEMA	2) GBR-1966	3) ANSI	4) SAW	5) FCAW

Q.5(C): Calculate the gross turbine heat rate and Net turbine heat rate with the help of parameters given below:

Parameters	Value
Feed water Inlet temperature to Boiler	125*C
Feed water flow(without considering Make-up)	160TPH
Steam generation	160TPH
Steam pressure	100Kg/cm^2
Steam temperature	515*C
Enthalpy of steam (at 100kg/cm^2 & 515*C)	816kcal/kg
Generator capacity	40MW
Auxiliary Power Consumption at Full load	4MW

Q.5(D): Following parameters are noted from the ultimate analysis of coal sample:

Carbon: 40%	Sulphur: 2%	Hydrogen: 4%

Calculate the theoretical quantity of air required in kilograms. If the boiler is operated at 4% excess oxygen, then calculate the actual air quantity in kilograms.

GUJARAT BOILER OPERATION ENGINEER EXAMINATION-2023
PAPER-2(BOILER ENGINEERING-2)

Time: 3.00 Hours **Max. Marks: 100**

SECTION-1 (MCQ)

Instructions:
1. Attempt all questions. Each question carries one mark.
2. Do not write or mark anything on the question paper.
3. Do not rewrite full question. Only write down question number and correct answer in the answer book.

Q.1: Answer all questions. **[30x1=30 Marks]**

SECTION-2 (Theory)

Instructions:
1. Attempt all questions.
2. Draw neat sketch whenever necessary.
3. Figures to the right indicate full marks.

1. Hydra-Step is mounted on
E. Steam Drum F. Re-heater G. Super-heater H. Water Drum

2. Manholes of oval type shall be arranged such that
A. Major Axis to be parallel with longitudinal centre line of boiler
B. Minor axis to be parallel with longitudinal centre line of boiler
C. Centre of manhole is offset to the longitudinal centre line of boiler
D. Can be arranged any way

3. A Certified Boiler Operation Engineer is authorized to be in-charge of boilers of any type of size provided all the boilers are situated
A. Within a radius of 35 meters B. Within a radius of 70 meters
C. Within a radius of 50 meters D. Within any radius

4. Burner tilting is resorted to for the purpose of
A. Varying furnace pressure B. Controlling re-heat steam temperature
C. Improving combustion efficiency D. None of the above

5. Scale is formed on heat transfer surface when
A. Water is acidic B. Water is alkaline
C. Water contains dissolved Ca & Mg D. Both (B) & (C)

6. SOx emissions in FBC boiler fired with coal are controlled by adding to the bed.
A. Magnesia B. Lime Stone C. Sand D. Silica

7. Which NDT method is commonly used to check for inter surface defects when thickness is high?
A. MPT(Magnetic Particle Testing) B. PT(Penetrant Testing)
C. UT(Ultrasonic Testing) D. ET(Eddy Current Testing)

8. Short-term overheating usually exhibits
A. Thin lip longitudinal rupture B. Thick lips longitudinal rupture
C. Transverse cracks D. Severe pitting

9. The pressure at the boiler furnaces is minimum in the case of
A. FD System B. ID System
C. Balanced Draught System D. Natural Draught System

10. The vacuum obtainable in a condenser depending upon
A. Capacity of steam ejector B. Quantity of steam to be handled
C. Type of condenser used D. Temperature of cooling tower

11. The steam space of boiler must be large enough to
A. Accommodate all the steam riser tubes B. Separate the water from steam
C. Accommodate steam separate D. Keep steam pressure down

12. Heat balance in a boiler furnace is improved by sending air to the furnaces
A. At low temperature B. At high temperature
C. Mixed with CO2 D. Both (B) and (C)

13. An increase in bulk density of a refractory increases its
A. Volume stability B. Heat capacity
C. Resistance to slag penetration D. All of the above

14. The optimum percentage of excess air for combustion depends upon the……of the fuel.
A. Type (solid, liquid, gas) B. Calorific value
C. Sulphur content D. Ignition temperature

15. High Sulphur content in a fuel of the flue gases?
A. Decrease the dew point
B. Reduces the combustion efficiency by limiting the permissible temperature reduction
C. Increase the dew point
D. Both (B) and (C)

16. The difference between mean solid velocity and gas velocity in FBC boiler is called
A. Fluidization B. Slip velocity C. Setting velocity D. Bulk velocity

17. How boiler pressure controlled in FBC boilers?
A. By switching ON/OFF Pulverizes B. By burner regulation
C. By cut-in and cut-off of compartments D. By variation in air flow

18. What is the main issue observed during start-up of coal fired FBC boiler?
A. Starvation B. Tube leakage C. Clinkerisation D. Overheating of tubes

19. Water at 4 Kg/cm2 pressure and 160*C temperature is exposed to atmosphere will
A. Start boiling B. Flash and get converted into steam
C. Will remain water only D. None of the above

20. The tube material used in cold end heating area of Air-preheater is
A. Low carbon steel B. Corten steel C. Alloy steel D. None of the above

21. In modern ESP which electrode is not grounded?
A. Emitting B. Collecting
C. Both Emitting and Collecting D. None of the above

22. The maximum percentage allowed for acceleration of pressure in steam test at site is
A. 5% B. 10% C. 15% D. 17%

23. With increase in steam load, convection super-heater has
A. Drooping characteristics B. Linear characteristics
C. Rising characteristics D. Flat characteristics

24. Caustic embrittlement causes due to presence of residual in boiler water.
A. NaCl B. NaOH C. $MgCO_3$ D. KNO_3

25. Which of the following increases, when high pressure steam is discharges to atmosphere?
A. Specific volume B. Total enthalpy of steam
C. Saturation temperature D. Sensible heat

26. Air venting in a steam system is required because air is
A. Diluents B. An insulator C. Inert D. A good conductor

27. Which of the following salt causes temporary hardness in water?
A. Calcium Sulphate B. Calcium bicarbonate
C. Calcium chloride D. Calcium nitrate

28. Which one of the following is TRUE of a water softening process?
A. It reduces hardness but not TDS B. It reduces both hardness and TDS
C. It reduces TDS but not hardness D. One of the above

29. Which type of firing is used for a pulverized coal fired boiler?
A. Over firing B. Tangential firing
C. Vertical firing D. Mixed firing for effective heat transfer

30. The elements of ultimate analysis of fuel does not include
A. Carbon B. Hydrogen C. Oxygen D. Volatile Matter

Question No.1: Answer the following questions. (ANY TWO) [Marks: 20(10x2)]
Q.1(a): In which cases must a boiler be shut down immediately?
Q.1(b): Describe details mentioned in Form-VI ((Certificate for use of a Boiler) (IBR-1950)).
Q.1(c): How many methods are there for the preservation of boiler? Explain in details.

Question-2: Answer the following questions. (ANY FOUR) [Marks: 20(5x4)]
Q.2(a): What are basic conditions to fulfil proper deaeration system?
Q.2(b): What factors influence the combustion of coal particles in a fluidized bed?
Q.2(c): What factor leads to more intensive carry over?
Q.2(d): What are advantages of Air-heating in boiler?
Q.2(e): What is difference between foaming and priming?

Q.3: Write short notes on the following. (ANY FOUR) [Marks: 20(5x4)]

a) Soot Blowers	b) Economizers	c) Air-preheaters
d) Super-heaters	e) PRDS	

Q.4: Differentiate between: **[Marks: 10(2x5)]**

a) Temporary and permanent hardness.	b) Sub-critical and Super-critical boiler.
c) Implosion and Explosion.	d) Degasser and Deaerator
e) Ultimate and Proximate Analysis	

GUJARAT BOILER OPERATION ENGINEER EXAMINATION-2023
PAPER-3(ENGINEERING DRAWING)

Time: 4.00 Hours **Max. Marks: 100**

SECTION-A (MCQ)

Instructions:

1. Attempt all the questions. Figure to right indicates full marks.
2. Do not write or marks= anything on the question paper.
3. Do not write full question. Only write down question no. and correct answer.

Q.1: Write the correct answer for the following from the given options. [20x1=20]

1. The dashed line is used to show edges in orthographic views.
A. Hidden B. Visible C. Phantom D. Centre

2. In ___ views the internal construction of parts are cut and exposed for better understanding.
A. Front B. Auxiliary C. Sectional D. Isometric

3. A ¾ the circle over a feature indicates presence of in that geometry.
A. Hole B. Threading C. Chamfer D. Fillet

4. In a drawing of bolt with double start indicating M24x1.5x60, how much is the lead of the bolt?
A. 12 B. 0.75 C. 3.0 D. 1.5

5. In bolt drawing indicating head dimension, A/F indicates……
A. Across Flat Distance B. Antilock Fastener
C. After Finishing D. Approximate Finishing

6. In a drawing of a valve body indicating the MAWP valve indicating its……
A. Major Allowable Working Pressure B. Minor Allowable Working Pressure
C. Max. Allowable Working Pressure D. Min. Allowable Working Pressure

7. The drawing showing 150# mark on the flange details indicates its……..
A. Fillet Size B. Surface Finish C. Pressure Class D. Temperature Class

8. Which weld geometry is used to weld longitudinal seam of 20mm thick boiler plates?
A. Fillet weld B. Single V butt joint
C. Double V butt join D. Single U butt joint

9. Which of the parameters is not required for hemispherical dished end?
A. Knuckle Radius B. Straight Face
C. Crown Radius D. Thickness

10. The eccentricity(ε) of an ellipse is……
A. ε>1 B. ε<1 C . ε=1 D. ε=0

11. The actual length of a line is 100mm. What will the approximate length of the line for isometric projection?

A. 81.5 mm B. 75.5 mm C. 101.5 mm D. 105.5 mm

12. Which of the following is not a reducing scale?
A. 1:1 B. 1:200 C. 5:320 D. 5:6

13. What is the ratio of length of the arrow head to the depth of the arrow head for the dimension line?
A. 3:1 B. 1:3 C. 1:1 D. None of the above

14. When the cone is resting on its base on VP, is cut by a section plane parallel to VP, the true shape is ____ and can be seen in ____ view.
A. Ellipse, Front B. Circle, Top
C. Ellipse, Top D. Circle, Front

15. The length in the isometric projection drawing of line is 20cm. What is the true length of it?
A. 24.53 cm B. 15.46 cm C. 19.31 cm D. 23.09 cm

16. Which type of line is drawn as long dashed dotted thin, thick at ends and changes of directions?
A. Visible edges B. Cutting planes
C. Hidden outlines D. Dimension lines

17. The height of hexagonal nut is ____
A. 0.5D B. 1.1D C. 1.3D D. 0.9D

18. For screw thread designation M10x1.25 in which 10 and 1.25 indicate…….. respectively.
A. Core Diameter and Pitch B. Nominal Diameter and Pitch
C. Bolt Length and Depth of Thread D. Thread Length and Pitch

19. The angle of the ISO Metric "V" thread is ____
A. 60^0 B. 55^0 C. 47.5^0 D. 50.5^0

20. A circle which appear on an Isometric drawing as ____
A. Cycloid B. Ellipse C. Circle D. Parabola

SECTION-B (Drawing)

Instructions:
1. Attempt all questions. Figure to right indicates full marks.
2. Do not write or mark anything on the question paper.
3. Dimensions are in mm otherwise specify, if required.
4. Make suitable assumptions, if required and justify.
5. Draw as per the scale mentioned in the questions.
6. Dimensional methods/detail for drawings will be given proportional weigtage in the marks.

Q.2(a): Draw the only Two orthographic views of the gland collar with respect to X and Y directions as shown in Fig-1 using Third Angle projections Method. Take Scale of 1:1. [20]

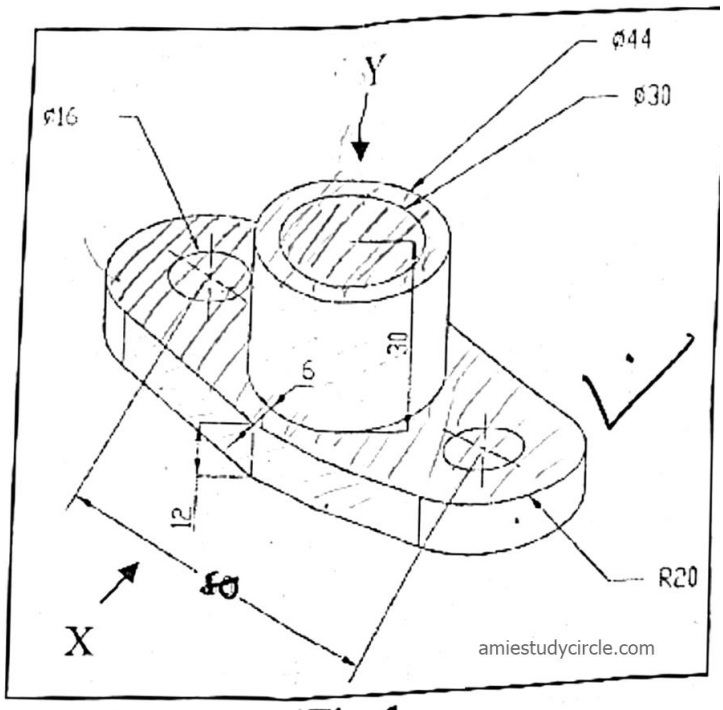

Fig. 1

OR Q.2(a): Draw the only Two orthographic views of the coupling part with respect to X and Y directions as shown in Figure-2 First Angle projections Method. Take scale of 1:1. **[20]**

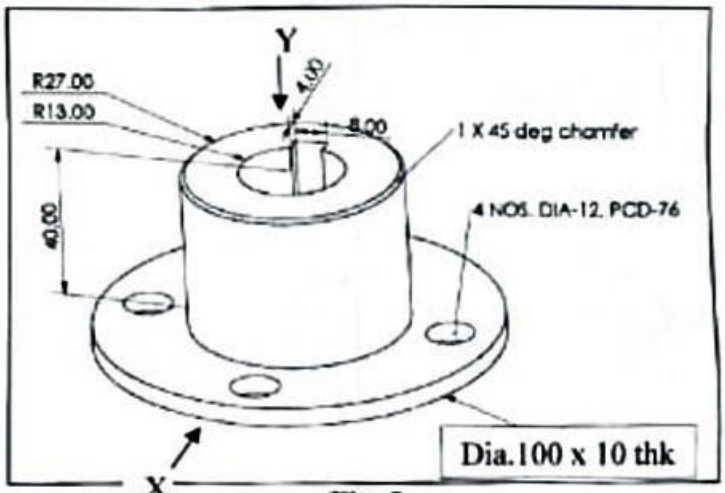

Fig. 2

Q.2(b): Darw the Isometric view of the Condensate water tank from the orthographic views (as per given symbol) shown in Fig-3. Take scale of 1:10. Neglect the thickness. **[20]**

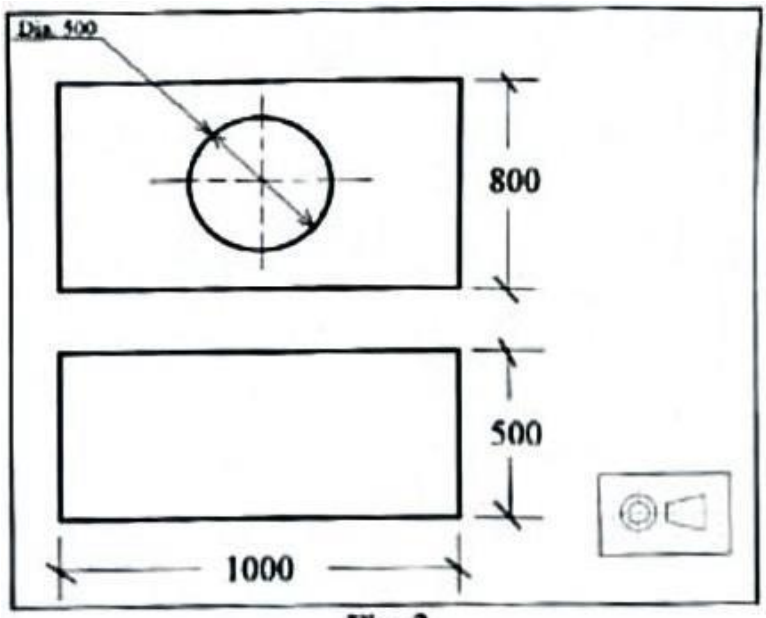

Fig. 3

N.B.:- All dimensions are in mm

Q.3: Draw ANY TWO of the following using scale of 1:1. **[10x2=20]**

Q.3(a): Draw equal Mild Steel Cross fitting for following given dimensions.
ID for all four outlets=100, Wall thickness=8, Minimum length from centre line to end face=115. All four ends are bevelled for welding purpose.

Q.3(b): Draw unequal Mild Steel Tee fitting=80x80x40 with reducing size as top branch for following given dimensions.

ID of branches are 80,80 and 40. Wall thickness=9. Length of the branches from centre line to end face for size 80 is 70 and for size 40 is 90. All three ends are bevelled foe welding purpose.
Q.3(c): Draw hemispherical end cap for Mild Steel pipe for following given dimensions. Pipe size (ID)=150, Wall thickness=10 and Straight Face of 25. End is bevelled foe welding purpose.

Q.4: Draw any TWO sketches of the following with proportional dimensions. [10x2=20]
Q.4(a): The Eye (Hoop) bolt of size 75 diameter with Nut and Washer for foundation of chimney.
Q.4(b): Draw sectional view of Y-Strainer for pipe line of 50 diameter.
Q.4(c): Ω-shape expansion loop for steam pipe of 100 diameter with vent valve.