Study Material For Boiler Operation Engineer (BOE) Exams

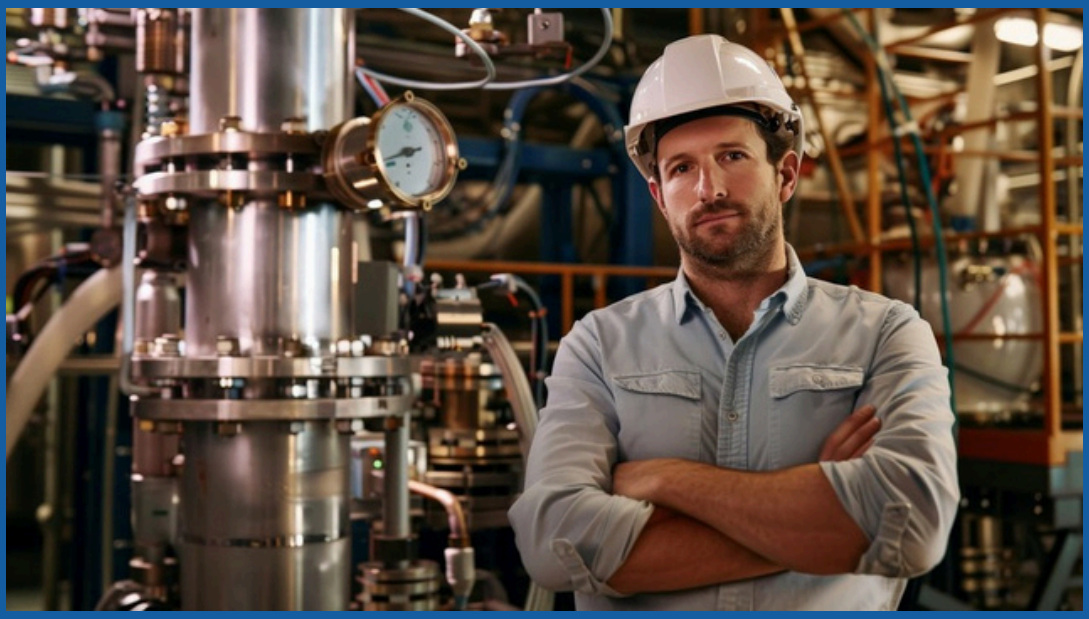

Theory, Numerical Problems, MCQs and Boiler Drawing Problems from BOE Exams

Amazon Flipkart Pothi

PROENGR.IN

SUDESH K JAIN

GUJARAT BOILER EXAMINATION BOARD

BOILER OPERATION ENGINEER EXAM – 2018

PAPER -1
Section B

Date: 13/10/2018 **Time: 10:30 AM to 01:00 PM**

Day: Saturday **Marks: 70**

Instruction:

1) **Attempt all questions as per instruction**
2) **Wherever necessary draw neat sketch**
3) **Write new question on new page.**

Q:1 What is the final condition of the steam in each of following processes, if the initial condition in each case is 0.95 dry and pressure is 8.6 kg/cm^2 abs. **[15]**

I. This steam loses 35 Kcal/kg at constant pressure.
II. its temperature is reduced at constant volume to 165 ^{o}C
III. It does 55 Kcal/kg of work in turbine stage (steady flow process) and leaves at 2.8 kgf/cm^2 abs.

Q:2 South African coal having calorific value of 6500 kcal/kg has a composition by weigh [C=0.78, H_2 =0.05, O_2 0.08, S= 0.02 & N= 0.02 reminder is ash . It is burnt in furnace with 20% of excess air. The flue gas enters in chimney at 145 ^{o}C and atmospheric temperature is 35 ^{o}C. **[10]**

Calculate proportionate heat carried by flue gases.
Assume perfect combustion, Cp for air 0.24 kcal/kg ^{o}K, Cp for dry product of combustion =0.25 kcal/kg ^{o}K. Heat carried away per kg of moisture in flue gases is 300 kcal/kg.

Q:3 The temperature in a surface condenser is 40 ^{o}C and the vacuum is 69 cm of Hg while barometer reads 75 cm of Hg. Determine the partial pressure of steam and air and the weight of air present per kg of steam. Assume R for air = 29.27 kgf m/kg ^{o}K and 76 cm of Hg corresponding to 1.0332 kgf/cm^2. **[10]**

Q:4 Compare the thermal efficiencies of two boiler having the following data: (SI Units) **[10]**

Boiler-1 (Coal fired)

Steam pressure	: 14 bar (abs)
Steam produce/kg of coal	: 10 kg
Quality of steam	: 0.9
Feed water Temp.	: 27 ^{o}C
CV of coal	: 34 X 10^3 KJ/Kg

Boiler-2 (Oil fired) Steam pressure : 14 bar (abs)
Steam produce/kg of oil : 14 kg
Quality of steam super-heated: 240 ^{O}C
Feed water Temp. : 27 ^{O}C
CV of ~~coal~~ Oil : 46 X 10^3 KJ/Kg.
Specific heat of feed water: 4.1868 KJ/kg ^{O}K.

Q: 5 Attempt any **One from following** **[10]**

a) Calculate the height of chimney required to produce a draught equivalent to 1.7 cm of water if the flue gas temperature is 270 centigrade and ambient temperature is 22 centigrade and minimum amount of air per kg of fuel is 17 kgs.

b) In a boiler trial 1250 kg of coal is consumed in a 24 hour. The mass of water evaporated is 13000 kg and the mean effective pressure is 7 bar. The feed water temperature is 40c; heating value of coal is 30000 KJ /kg. The enthalpy of 1kg of steam at 7 bar is 2570 KJ /kg. Determine
   1. Equivalent evaporation per kg of coal.
   2. Efficiency of the boiler.

Q:6 In a small capacity of Thermal Power plant, the condenser is provided with a separate air-cooling section. The temp. of steam entering the condenser is 56°C and temp. at the air pump section is 46°C. The barometer reads 76 cm of Hg, find **[5]**

(1) Vacuum in Condenser

(2) If discharge of dry air-pump is 90 m^3/min., find the air leakage in the condenser in kg/hr.

Q:7 Attempt any **Two from following** **[10]**

a) During the ESP performance evaluation study the inlet gas stream to ESP is 289920 NM^3/hr and the dust loading is 5500mg/NM^3. The outlet gas stream from ESP is 301100 M^3/hr and the dust loading is 110 mg/NM^3. How much fly ash is collected in the system?

b) Steam leaving the boiler at a pressure of 12 bar enters the super heater where it receives heat at constant pressure. The condition of steam entering the super heater is 0.95 dry and leaves it at a temperature of 250°C. Calculate the heat received by steam in the super heater and increase in volume of the steam as it passes through the super heater.

c) Furnace oil having following composition by weight, determine lower calorific value of oil by Dulong's formula , C: 86 % H_2 : 14%(Assume all elements are in free state).

d) 200 TPH of steam at 35 Kg/cm^2(abs) & 400 ^{O}C. is supplying to process plant through spray type desuperheater with spray water temperature of 60 ^{O}C .Steam outlet from process boiler is at 35 Kg/cm^2(abs) & 450 ^{O}C. Calculate amount of spray water quantity required in TPH to maintain steam temperature 400 ^{O}C.(neglect pressure drop in system).

BOARD OF EXAMINERS, GUJARAT STATE
BOILER OPERATION ENGINEERS' EXAMINATION -2018
PAPER-II

Date: 13/10/2018

TIME:02.30 PM to 05.30 PM
MARKS: 70
TIME: 2 Hrs 30 Minutes

SECTION:II

Instructions: -

1. **Wherever necessary draw net sketch.**
2. **Marks for each question indicated on right side.**

Q.2 Answer the following questions (Any Five) Marks: 20

(i) Why a steel chimney particularly favored in the case of a gas turbine power plant?
(ii) Explain basic mode of heat transfer.
(iii) What is fouling and slagging of tube surface, in term of deposit?
(iv) What is normalizing and stress relieving?
(v) Why forced circulation is absolutely necessary to use in super critical boiler?
(vi) What are the disadvantages of fluidized bed boilers as compared to pulverize coal fire boilers?

Q.3 Answer the following questions (Any Two) Marks: 20

(i) What is a super critical boiler? Draw its schematic diagram. What is the basic difference between subcritical and supercritical boilers? What are the advantages of supercritical boiler over subcritical ones?
(ii) What is the purpose of alkali boil-out process during boiler pre commissioning? Briefly explain the procedure with criteria of declaring process complete.
(iii) What are the functions of condenser in steam power plant? List out the merits and demerits of surface condenser over jet condenser.

Q.4 Answer the following questions (Any Four) Marks: 20

(i) What is EPRS area of a boiler? Why furnace size varies for Gas, Oil & Coal fired boiler?
(ii) What is heat rate, steam rate and water rate of a thermal power plant? Establish a relation between heat rate & steam rate of straight condensing turbine.
(iii) What is stress corrosion in a boiler? Explain caustic embrittlement.
(iv) Explain the procedure of annual inspection of boiler for renewal of certificate as per the Boilers Act-1923 and rules & regulations framed there under. What is the parameter for calculation of renewal fees for boiler?
(v) Describe the main reasons for boiler tube failure and what pro-active action can be taken to avoid these.

Q.5 Answer the following questions Marks: 10

(i) Explain proximate & ultimate analysis of fuel.
(ii) Explain explosion & implosion of boiler
(iii) What is latest emission standard prescribed by Government for thermal power plant?
(iv) What are the cause & cure of foaming & priming in boiler?

GUJARAT BOILER EXAMINATION BOARD
BOILER OPERATION ENGINEER EXAMINATION-2018
Paper-3 (Drawing) Section-B Date: 14-10-2018 Time: 10.30 AM to 2.00 PM

Instructions: 1. Attempt all questions.
2. Figures to the right indicate full marks.
3. Make suitable assumptions if needed and justify.
4. Dimensions are in mm or otherwise specify.

Q.2 Draw sectional elevation assembly view for the given details drawing of the feed check valve. **Take scale of 1:2** [Refer Fig. 2(A) and 2(B)]. **[30]**

Q.3 Answer **Any Two** of the followings. **[30]**

(a) Redraw the drawing of 'S' Bend with dimensions as per given Fig. 3(A). **Take Scale of 1:4.**

(b) Redraw the drawing of the Super Heater Bend with dimensions as per given Fig. 3(B). **Take Scale of 1:2.**

(c) Redraw the detail sectional drawing of the Finned Tube End with dimensions as per given Fig. 3(C). **Take Scale of 1:1.**

Q.4 Answer **Any Two** of the following **(Take Scale of 1:1)** **[20]**

(a) Draw front view and side view of the Lifting Eye bolt of size 30 mm with standard proportions. It is rectangular in cross section at its head, aiding in holding it to prevent rotation. Take Eye diameter and bolt diameter equal, thread length of 80 mm and total length from centre of the eye is 160 mm.

(b) Draw front view and side view of the Hexagonal headed half threaded bolt of size M48×4×100 with standard proportions.

(c) Draw the hemispherical end cap for pipe I.D. 200 mm and thickness of 12 mm. Take Straight Face = 30 mm.

****

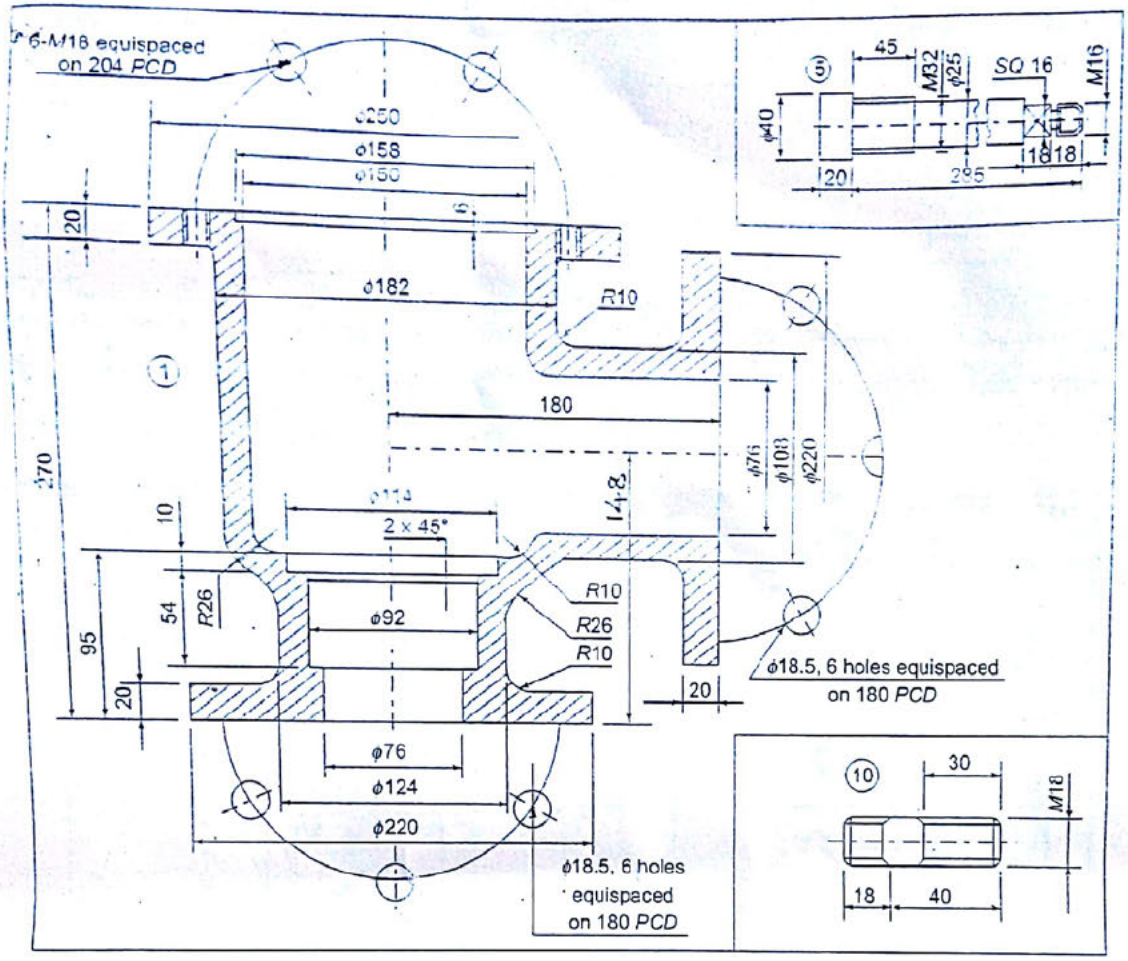

Feed check valve

PART LIST

Sl. No.	Part	Quantity	Material
1	Valve body	1	CI
2	Valve seat	1	GM
3	Valve	1	GM
4	Cover	1	CI
5	Spindle	1	MS
6	Packing	As required	Fibre
7	Gland	1	GM
8	Stud M16	2	MS
9	Nut M16	3	MS
10	Stud M18	6	MS
11	Nut M18	6	MS
12	Handle	1	MS

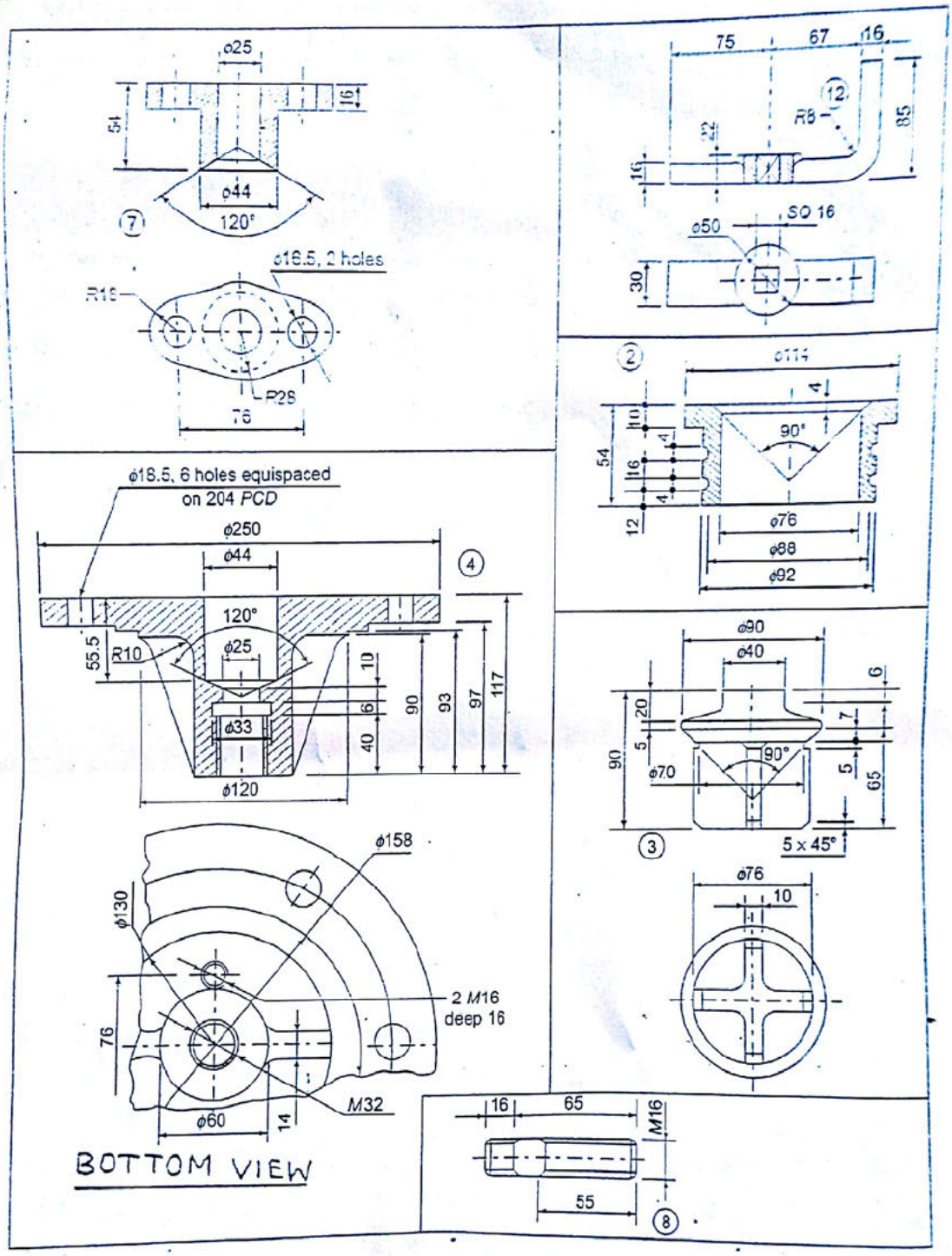

FEED CHECK VALVE

FIG. 2 (B)

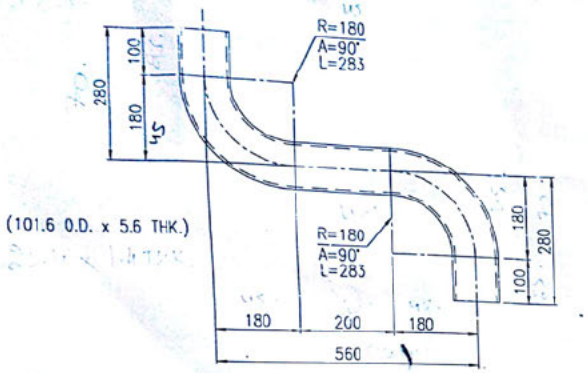

FIG.3(A) BEND 90°
DEVELOPED LENGTH 966 mm

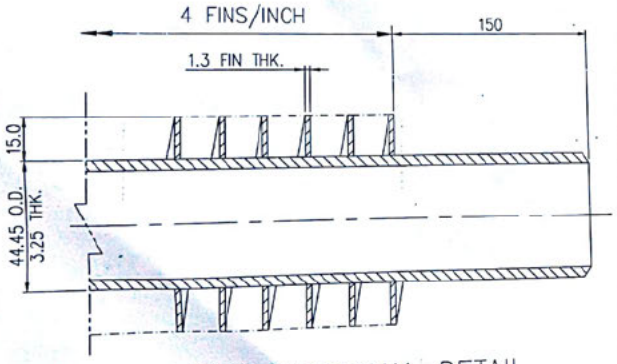

FIG.3(C) SECTIONAL DETAIL
OF FINNED TUBE

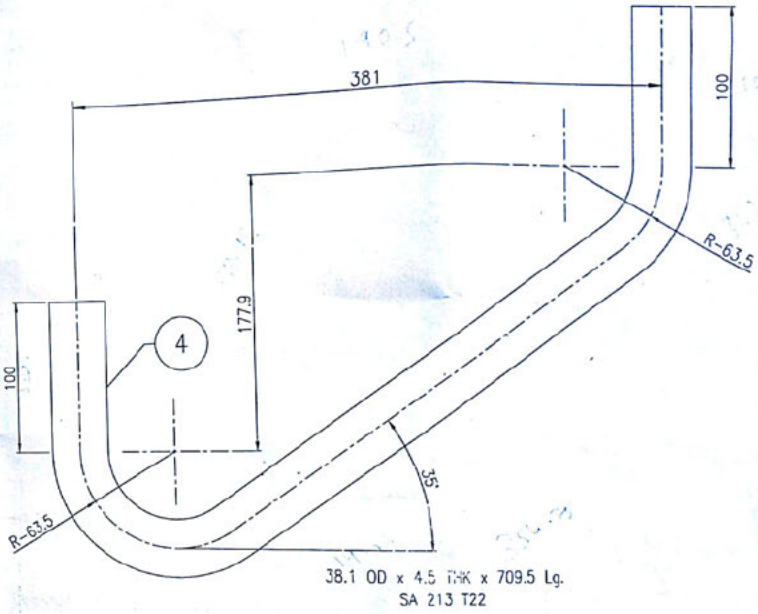

FIG.3(B)
SUPER HEATER BEND