Study Material For Boiler Operation Engineer (BOE) Exams

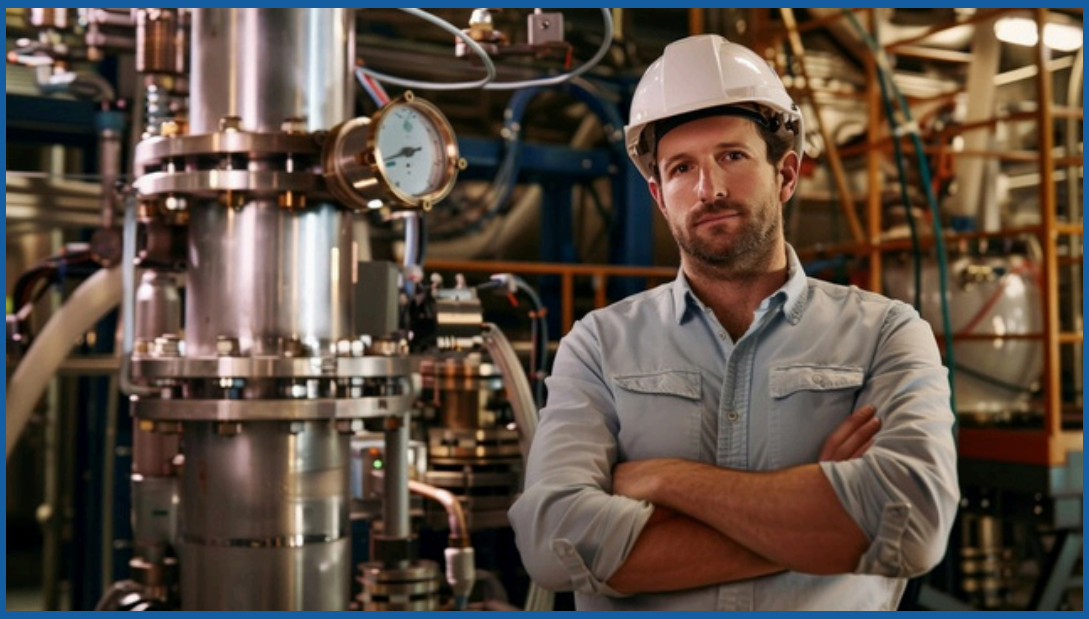

Theory, Numerical Problems, MCQs and Boiler Drawing Problems from BOE Exams

Amazon Flipkart Pothi

PROENGR.IN

SUDESH K JAIN

GUJARAT BOILER EXAMINATION BOARD

BOILER OPERATION ENGINEER EXAM – 2016 .

PAPER -1
Section B

Date: 26/09/2016 **Time: 10:30 AM to 01:00 PM**

Day: Saturday **Marks: 70**

Instruction:

1) **Attempt all questions.**
2) **Wherever necessary draw neat sketch**
3) **Write new question on new page.**

Q : 2(a) Write in short : **(10 MARKS)**

a) What is the principle of mechanical deaeration (pressure type) of boiler feed water?

b) What are the principle heat losses that occur in a boiler?

c) What are the various methods available to control the 'excess air' in a boiler?

d) What is the effect of boiler loading on boiler efficiency?

e) Why boiler blow-down is required?

Q: 2(b) Calculate the blow down rate for a Boiler with an evaporation rate of 3000 kg/hr, If the maximum permissible TDS in Boiler water is 3000 ppm and with 10% make up water addition. The feed water TDS is around 300 ppm. **(5 MARKS)**

Q: 3(a) During the ESP performance evaluation study the inlet gas stream to ESP is 289920 NM^3/hr and the dust loading is 5500mg/NM^3. The outlet gas stream from ESP is 301100 M^3/hr and the dust loading is 110 mg/NM^3. How much fly ash is collected in the system? **(10 MARKS)**

(10 MARKS)

Q: 3(b)

A plant having 100 KW back pressure turbine steam power plant parameters are as under.
Coal input to boiler : 1550 kg/ hr
Turbine inlet steam Flow: 5100 kg/hr
Turbine inlet steam Pressure: 15 Kg / cm2 (G)
Turbine inlet steam temperature: 250 °C
Power output : 100 KW
Process steam flow from turbine outlet: 5100 kg/hr
Process steam pressure at turbine outlet : 2 Kg / cm2 (G)
Process steam temperature at turbine outlet: 130 °C

Determine Power generation efficiency of turbo generator.

Q: 4 (a) In process plant steam being used in process for heating purpose. Following are condition (5 MARKS)

a) Inlet mass of steam = 35000 kg/ hr

b) Inlet steam Pressure = 5 kg/ cm^2

c) Inlet steam Temp. = 250°C

d) Cooling water supply pressure = 10 kg/ cm^2

e) Cooling water supply temp. = 90°C

f) Outlet steam pressure = 3.5 kg/ cm^2

g) Outlet steam temp. = saturation temp. + 5°C

Find out how much mass of water require for injection to reduce temperature?

Q: 4 (b) In a Process plant a coal fired boiler of 78% efficiency is proposed to be replaced with Paddy Husk fired Boiler of 68% efficiency. Calculate the cost saving for changing over to Paddy Husk. (10 MARKS)

a) C. V. of Coal = 4800 Kcal/ kg

b) Cost of Coal = INR 4500/ MT

c) C.V. of Husk = 3568 Kcal/kg

d) Cost of Husk = INR 2500 /MT

e) Steam Generation = 15 TPH

f) Feed water Temperature = 120°C

g) Steam Pressure = 42 ata , 420°C.

h) Annual Operating Hours of Boiler = 8000 Hours

Q: 5 (Answer any FIVE) (20 MARKS)

(a) In a coal sample it is found Ash is 40 %, Inherent Moisture is 3 % and Total Moisture is13 %.Using suitable Empirical Formula calculate UHV and GCV of coal.

(b) In a coal sample it is found that total moisture as received basis is 13 %.Using suitable formula calculate GCV of the Dried coal if GCV of as received basis is3400 kcal/kg.

(c) Following parameters are noted from Ultimate analysis of Coal sample

i) Carbon—40 % ii) Sulphur-- 2 % iii) Hydrogen-- 4 %

Calculate theoretical quantity of air required in Kg. If boiler is operated at 4 % excess oxygen then calculate actual air quantity in Kg.

(d) Calculate pressure drop in a 100 NB, 150 mtr long horizontal steam pipe. Velocity of steam in pipe is 3 mtr/sec. Constant friction factor 0.005

(e) How much heat will be required to increase 50 tons of Feed water at 120 centigradeto 240 centigrade?

(f) The safety valve of a Boiler is set at 42 kg/cm2.During testing it is found valvelifts at 45 kg/cm2 and reset at 39.5 kg/cm2. Calculate i) Over pressure ii) % Blowdown

(g) Calculate Efficiency of a 200 tph, 100 kg/cm2, 520 centigrade boiler, if 1050 tons of coal with GCV of 3700 kcal/kg is consumed per day. Feed water inlet temperatureis 135 centigrade and make up is negligible.

GUJARAT BOILER EXAMINATION BOARD

Boiler Operation Engineer Exam -2016

Paper –II

Date: - 26/11/2016 Time: - 02.30PM to 05.30PM

Day: - Saturday

Section –II

Time: - 2hrs.30Min. **Marks: - 70**

Instructions:-

1. **Attempt all questions.**
2. **Draw Sketch where ever required.**
3. **Marks for each question indicated on right side.**

Q - 2. **(20Marks)**

A. **Write any one case history of pressure part failure of boiler with details and how the same reported and attended till restart of boiler.**
B. **Describe Direct and Indirect methods of boiler efficiency calculations.**
C. **How you can come to know that your boiler is required chemical cleaning explain.**
D. **Mention various techniques of non destructive examination and explain ultrasonic testing method.**

Q - 3. Write the difference between following: - **(20Marks)**

A. **AFBC boiler v/s CFBC boiler.**
B. **Bag filter ash collector v/s ESP ash collector.**
C. **Dry preservation of boilers v/s Wet preservation of boilers.**
D. **Water cooled condenser v/s Air cooled condenser.**
E. **Convection v/s Radiation Heat Transfer.**

(20 marks)

Q- 4

A. **What type of control system adapted to take care of steam demand fluctuations, water level control and steam pressure control fluctuations?**
B. **What are the cause and cure of foaming and priming in boiler?**
C. **What is the purpose of soot blowers and explain various types of soot blowers.**
D. **Explain cold end corrosion and hot end corrosion.**

(10 marks)

Q - 5 Attend any Four

A. **pH value of water and its effect.**
B. **What are the major steps in NOX control strategy?**
C. **Explain what will be the effect in chimney draught in winter and summer, if the flue gas temperature remains same.**
D. **What are the advantages of oil and gas fuel compared with coal?**
E. **Write down the value of 1bar pressure in PSI, kPa, Mpa, Kgf/cm2, mm of Hg.**

Candidate Exam. Seat No. A008

GUJARAT BOILER EXAMINATION BOARD

BOILER OPERATION ENGINEER EXAMINATION-2016

Paper-3 (Drawing) Section-B Date: 27-11-2016 Time: 10.30 AM to 2.00 PM

Instructions: 1. Attempt all questions.
2. Figures to the right indicate full marks.
3. Make suitable assumptions if needed and justify.
4. Dimensions are in mm or otherwise specify.

Q.2 Draw the assembly drawing in cross sectional elevation of the Flanged Coupling – Unprotected type whose details is given in Fig.2. Take scale of 1:1. **[20]**

Q.3 Write **Any Four** of the followings. **[60]**

(a) Draw with standard dimensions slip-on flange (Table-H) for carbon steel pipe of Nominal bore 100 mm and OD 116 mm with following details.

W.P. = 14 kg/cm^2 PCD = 190 mm Bolt size = 16 mm

Flange O.D.= 230 mm Flange thickness= 25 mm

(b) Draw the long radius 90^0 elbow 50 mm nominal pipe size, OD= 60 mm, centre to end distance = 76 mm and Radius = 76 mm

(c) Draw the hemispherical end cap for pipe of nominal size 100 mm, OD = 116 mm, Straight Face = 20 mm. Write the thickness of cap.

(d) Draw the roller support for 100 mm steam line. Write the name of its parts.

(e) Draw the hoop (eye) bolt of size 50 mm for foundation with standard proportions.

(f) Draw the explosion door of economiser of size 600 mm width and 900 mm height.

(g) Draw the flash steam vessel to collect condensate water.

(h) Draw the steam separator for 100 mm steam pipe line.

****

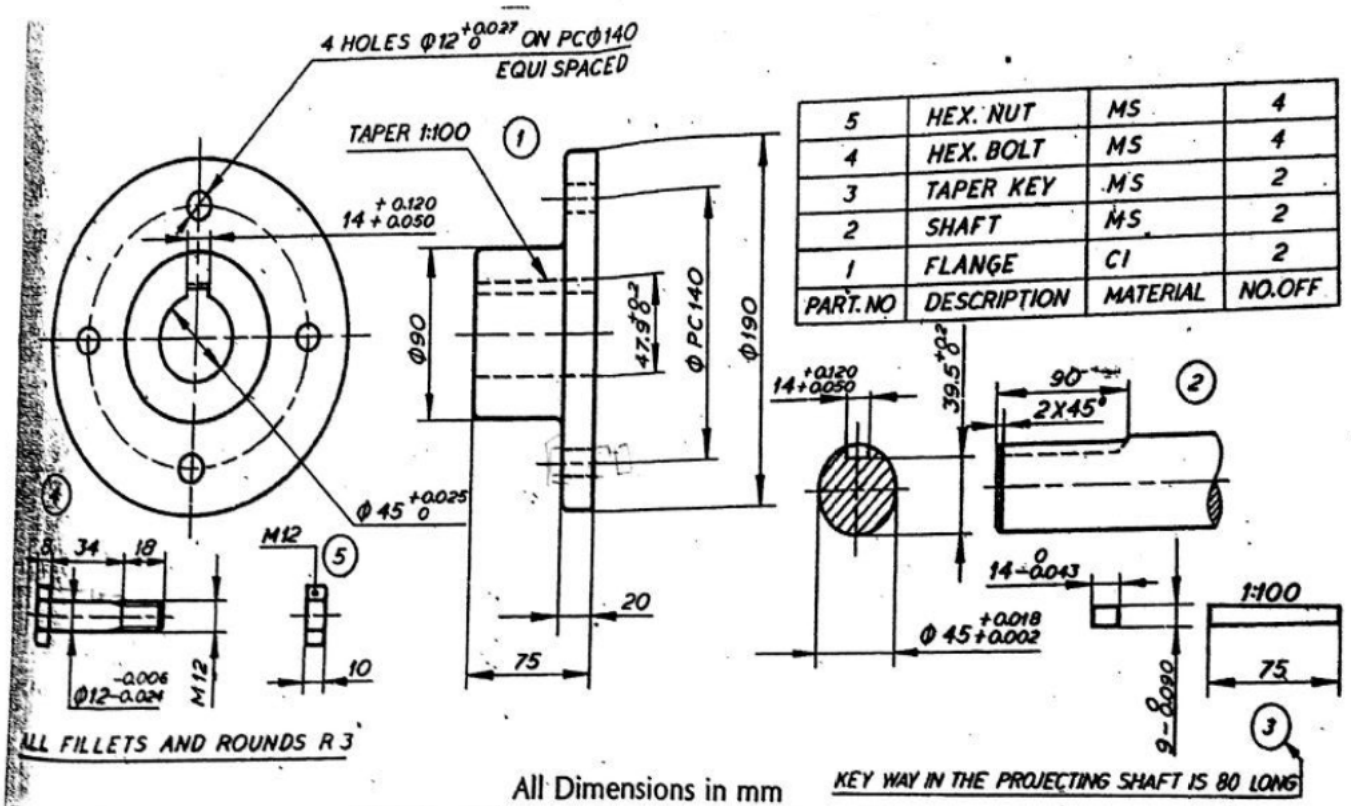

PART. NO	DESCRIPTION	MATERIAL	NO.OFF
5	HEX. NUT	MS	4
4	HEX. BOLT	MS	4
3	TAPER KEY	MS	2
2	SHAFT	MS	2
1	FLANGE	CI	2

All Dimensions in mm

Details of Flanged Coupling – Uprotected Type

Fig. 2