Study Material For Boiler Operation Engineer (BOE) Exams

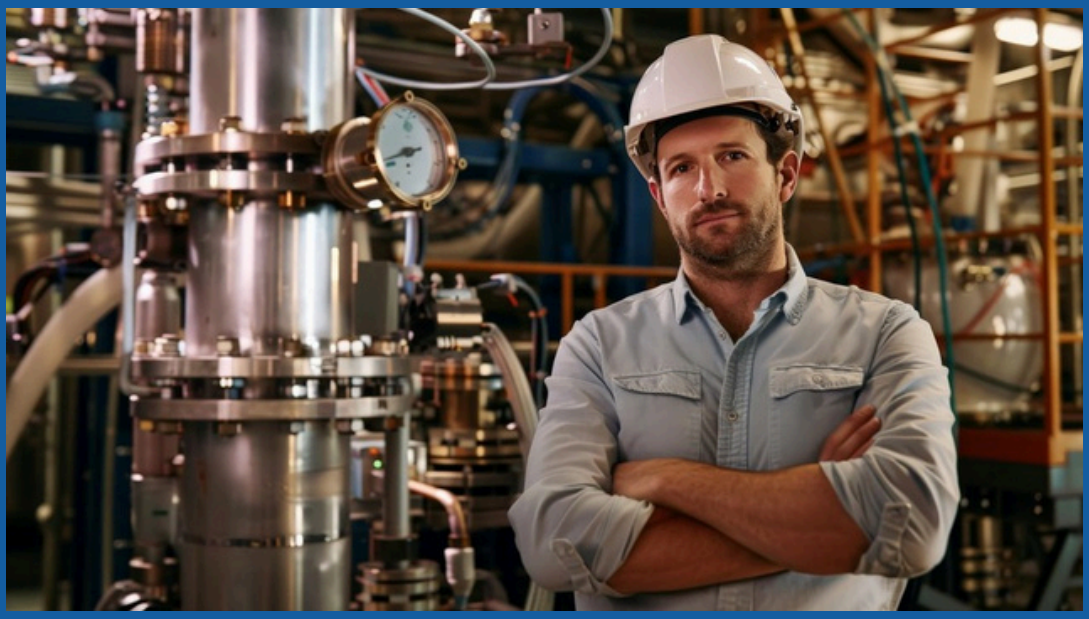

Theory, Numerical Problems, MCQs and Boiler Drawing Problems from BOE Exams

Amazon Flipkart Pothi

PROENGR.IN

SUDESH K JAIN

Chhattisgarh Boiler Operation Engineer Examination 2021

Time 3 hours

Boiler Engineering Paper 1

Max Marks 100

Note:- All Questions are compulsory

SECTION A

Q. 1 Choose the correct answer. (Write the correct answer in sequence in **first page only**) (1 marks each)

1	With increase in load, radiant super heater has	
	a) Drooping Characteristic	b) Linear Characteristic
	c) Rising Characteristic	d) Flat Characteristic
2	Fusible plug for Boilers is made of fusible metal containing	
	a) Copper	b) Bismuth
	c) Nickel	d) Aluminum
3	Which of the following parameter is constant for a mole for most of the gases at a given temperature and pressure	
	a) Enthalpy	b) Volume
	c) Entropy	d) Mass
4	If a certain amount of dry ice is mixed with same amount of water at 80^0C, the final temperature of mixture will be	
	a) 80^0C	b) 0^0C
	c) 40^0C	d) 20^0C
5	Steam Pipes should be run with a falling slope of ... in the direction of steam flow for effective line condensate drainage	
	a) 50 mm in 30 meters	b) 125 mm in 30 meters
	c) 250 mm in 30 meters	d) 350 mm in 30 meters
6	Insulating material made by blending and melting of alumina and silica is known as	
	a) Ceramic fibre	b) high alumina brick
	c) Fire brick	d) insulating brick
7	What does hydrostatic pressure in extrusion process improve	
	a) Ductility	b) Brittleness
	c) Tensile Strength	d) Compressive Strength
8	Which of the following is true of plate heat exchangers	
	a) close approach	b) expandable area
	c) Counter current	d) All of the above
9	The mass of CO_2 released on complete combustion of 100 kg of fuel with 60% carbon	
	a) 319 kg	b) 4400 kg
	c) 600 kg	d) 220 kg
10	Which of the following can be used as desiccant in boiler preservation	
	a) Asilica gel	b) activated carbon
	c) un-slaked lime	d) all of the above

SECTION B Answer the following questions in short (2 Marks each)

Q 2 i) Why should one use dry saturated steam at the lowest possible pressure for indirect steam heating?

ii) What are the two major advantages of direct injection of steam for heating of liquid?

iii) What is flash steam?

iv) Explain why de-superheating is done after pressure reduction in PRVs?

v) What is Equivalent Evaporation.

vi) What is Diamond RivettedJoint

vii) A 4 Row velocity compounded steam turbine develops total 6400 kW. What is the power developed by last Row?

viii) What happens to economizer in boiler, if feed water temperature is too low due to all heaters being out.

ix) What is Dry Bulb Temperature and Wet bulb Temperature

x) Why do liquid fuels with lower specific gravities have higher heating values per unit mass ?

SECTION C Answer the following questions (4 Marks each)

Q 3 a) A reverse Carnot cycle working as a heat pump has a COP of 7. What is the ratio of minimum to maximum Absolute Temperature

b) A Carnot cycle refrigerator operates between 2500K and 3000K. What is the value of COP

c) What is the difference between Heat Capacity and Specific Heat of a material

d) What is Reverse Osmosis

e) Short Note on Reciprocating engine co-generation system

SECTION D

Q 4 a) The following is the percentage composition of Coal on Mass Basis:

C – 90%, H_2 – 3.3%, O_2 – 3%, S – 0.9% and remaining ash. Calculate

i) The theoretical air required to burn 1 Kg of coal completely (3Marks)

ii) The percentage composition of dry flue gases on mass basis if 50% excess air is supplied. Assume air has 23% Oxygen on Mass basis (2 Marks)

Q 4 b) An Aluminium Alloy Bar fixed at its both end is heated through 20 K . Find the stress developed in the bar. Take Modulus of Elasticity and Coefficient of Linear Expansion for the bar material as 80 GPa and 24 X 10^{-6} /°K respectively. (5 Marks)

Q 4 c) The interior of an Oven is maintained at a temperature of 860°C by means of suitable control apparatus. The walls of the oven are 45 cm thick and are constructed from material whose thermal conductivity is 0.261 watts/m°C. Estimate the heat loss for each square metre of wall surface per hour. The outside wall temperature is 250°C . (5Marks)

Q 4 d)The efficiency of a boiler on GCV basis is 85%. The fuel contains 1% moisture and 12% hydrogen. The GCV of fuel is 10,500 kCal/kg. What is the boiler efficiency on the basis of net calorific value?

Q 4 e) What are the advantages and Disadvantages of Welded Joints over riveted joints (5 Marks)

SECTION E

Q 5 a) An economizer was installed in an oil fired boiler. The following data was obtained after commissioning the economizer.

- Air to fuel ratio = 18
- Evaporation ratio of the boiler = 12.5
- Specific heat of flue gas = 0.25 kcal/kg°C.
- Condensate recovery in the plant = Nil.

Calculate the rise in temperature of feed water across the economizer, corresponding to a drop in flue gas temperature from 280 °C to 190 °C. (6 Marks)

Q 5 b) Draw a line diagram of the unit in your water treatment plant and explain briefly the function performed by each unit. (6 Marks)

Q 5 c) What is Caustic Embrittlement in Boiler. How it can be prevented (7 Marks)

Q 5 d) Explain the significance of the following properties in Refractory (6 Marks)

i) Porosity
ii) Bulk density
iii) Pyrometric cone equivalent
iv) Thermal conductivity

Chhattisgarh Boiler Operation Engineer Examination 2021

Time 3 hours

Boiler Engineering Paper 2

Max Marks 100

Note:- All Questions are compulsory

SECTION A

Q. 1 Choose the correct answer. (Write the correct answer in sequence in first page only) (1 marks each)

1	Drum Dish End material in typical 500 MW BOILER is	
	a) Alloy Steel	b) Cast Steel
	c) Carbon Steel	d) ~~Any of the above~~ non of above
2	In WPS "P Numbers" are assigned to.....	
	a) Electrodes	b) Welding Rods
	c) Weld Metal	d) Base Metal
3	Which Section of ASME deals with Recommended Guidelines for the care of Power Boilers?	
	a) Section IV	b) Section VI
	c) Section V	d) Section VII
4	Indicative Index for Abrasiveness in Coal is...	
	a) YZX	b) ABS
	c) HGI	d) YGP
5	Water logging of 2 m lift of condensate at trap discharge will result in back pressure of	
	i) 0.02 kg/cm^2	ii) 0.2 kg/cm^2
	c)2 kg/cm^2	d) 1.2kg/cm^2
6	Pinch analysis uses the _____ law of thermodynamics	
	a) First	b) Second
	c) Third	d) Both a and b
7	Which NDE method is commonly used to check for INTER SURFACE DEFECTS when thickness is high?	
	a) MPT(Magnetic Particle Testing)	b) PT(Penetrant Testing)
	c) UT (Ultrasonic Testing)	d) ET (Eddy Current Testing)
8	Which property is the most important, for an insulating brick?	
	a) Mechanical strength	b) Compact strength
	c) Chemical resistance	d) Porosity
9	As per IBR 1950 Material Test Certificates for Super Heater Coils will be in	
	a) Form III A	b)Form III B
	c) Form III C	d) Form V
10	Which of the following heat recovery equipment requires a compressor for its operation?	
	a) Thermo-compressor	b) Heat wheel
	iii) Heat pump	iv) Heat pipe

SECTION B

Q. 2 a) Match the following in relation to various measuring devices (0.5 Marks each)

	A		B
1	Absolute Pressure	a	Anemometer
2	Differential Pressure	b	Barometer
3	Air Velocity	c	Pitot Tube
4	Relative Humidity of Air	d	Spectrometer
5	Viscosity of fluid	e	OrsatAppartus
6	Discharge of fluid in pipe line	f	Calorimeter
7	AnalyzingColor spectrum	g	Hygrometer
8	Chemical Analysis of Flue Gas	h	Manometer
9	GCV of Coal	i	Rotameter
10	Stagnation Pressure	j	Viscometer

Q. 2 b) What is the relationship between equivalent diameter and cross section area of non-circular duct for the purpose of heat transfer calculation (2 Marks)

SECTION C

(4 Marks each)

Q 3 a) Name four external andfour internal defects in welds
b) Derive the net pressure equation used to find Chimney height
c) What happens if Speed of Centrifugal Pump is operated beyond design
d) What is a Fin. Differentiate between Fin Efficiency and Fin Effectiveness.

Q 4 *Write Short Note on Following* (4 Marks each)

i. Form V & Form VI as per Indian Boiler Regulation 1950
ii. List out any 5 information that are furnished in Form XIX
iii. Accident as per IBR Act 1923
iv. Steam Pipe as per IBR Act
v. Form III A, III B & IIIC as per IBR
vi. Duties & Responsibility of BOE

SECTION D

(6 marks each)

Q. 5a) What is the difference between Pinch Point and Approach Point in connection with Heat Recovery Steam Generator (HRSG)? How they affect performance of HRSG

b) What is Flue Gas DesulphurizationTechnology? State the MOEF Norms. What are the various process used in Power Plant for this.
c) What are the assumptions taken while designing a riveted joint for structural use
d) What are the causes of boiler Tube leakages
e) What are the general requirements of refractory material for furnace application.
f) Explain Classification in a Bowl Mill with a neat sketch. How does it affect Combustion

SECTION E

Q. 6 a) What are the factor affecting the Performance of ESP. (4 Marks)

b) During an Air Pollution Monitoring study, the inlet gas stream to a bag filter was 200000 m^3/hr. The outlet gas stream was 220000 m^3/hr. The Dust Load at Inlet and outlet was 5g/m^3 and 0.2g/m^3. How much Kg of Dust was collected in the Bag filter. (3 Marks)

CHATTISGARH BOILER OPERATION ENGINEERS EXAMINATION (2021)

DRAWING

TIME- 4 Hrs **MAX. MARKS-100**

Q1. Isometric View of an object is given below. Draw Front View, Right Side View and Top view **(20 Marks)**

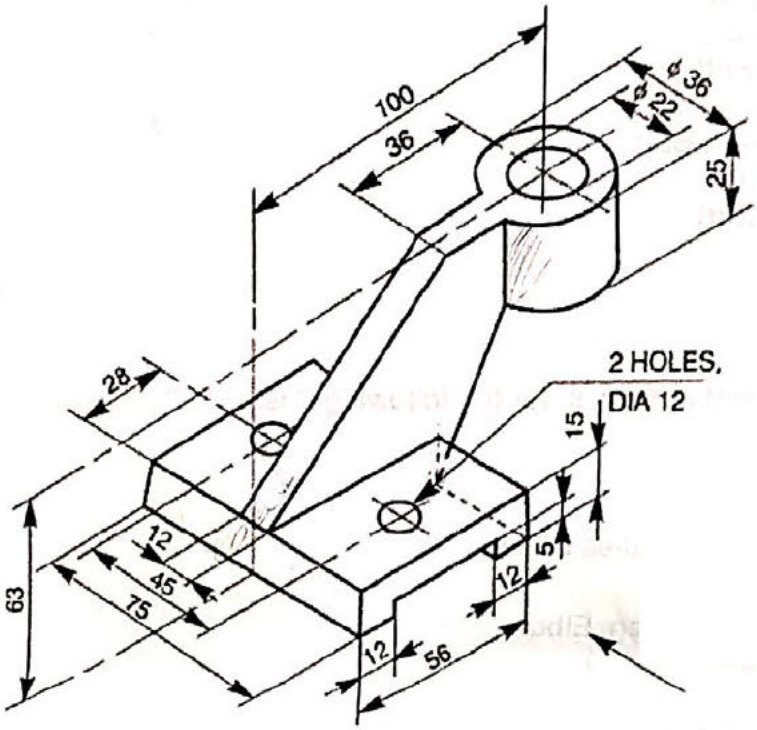

Q2. Draw an isometric view from the orthographic views shown below **(20 Marks)**

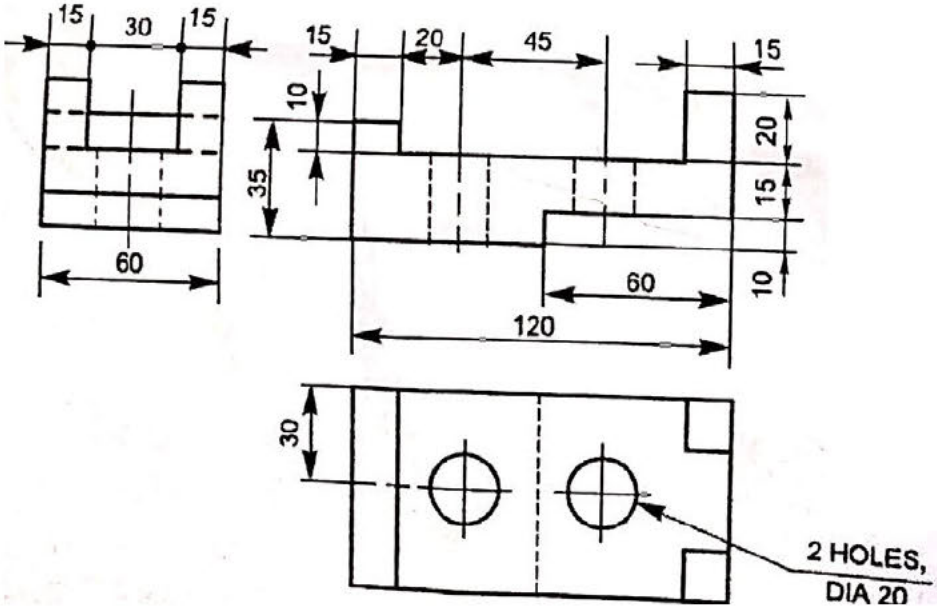

Q3. Draw free hand sketches along with symbols for any 10 of the following types of Welded joints **(15 Marks)**

1. Fillet
2. Square Butt
3. Single-V Butt
4. Double-V Butt
5. Single-U Butt
6. Double-U Butt
7. Single-Bevel Butt
8. Double-Bevel Butt
9. Single-J Butt
10. Double-J Butt
11. Edge
12. Spot

Q4. Draw free hand sketches for the following Cast Iron Pipe Fittings **(15 Marks)**

a) 90 Deg. Elbow
b) 90 Deg. Long Radius Elbow
c) 45 Deg. Elbow
d) Side Outlet 90 Deg. Elbow
e) Tee
f) Cross
g) Side outlet Tee
h) 45 Deg. Lateral
i) Reducer
j) Tee Reducer

Q5. Based on the part drawings of a Spring Loaded Relief Valve given below draw sectional drawing of the valve assembly. (30 Marks)

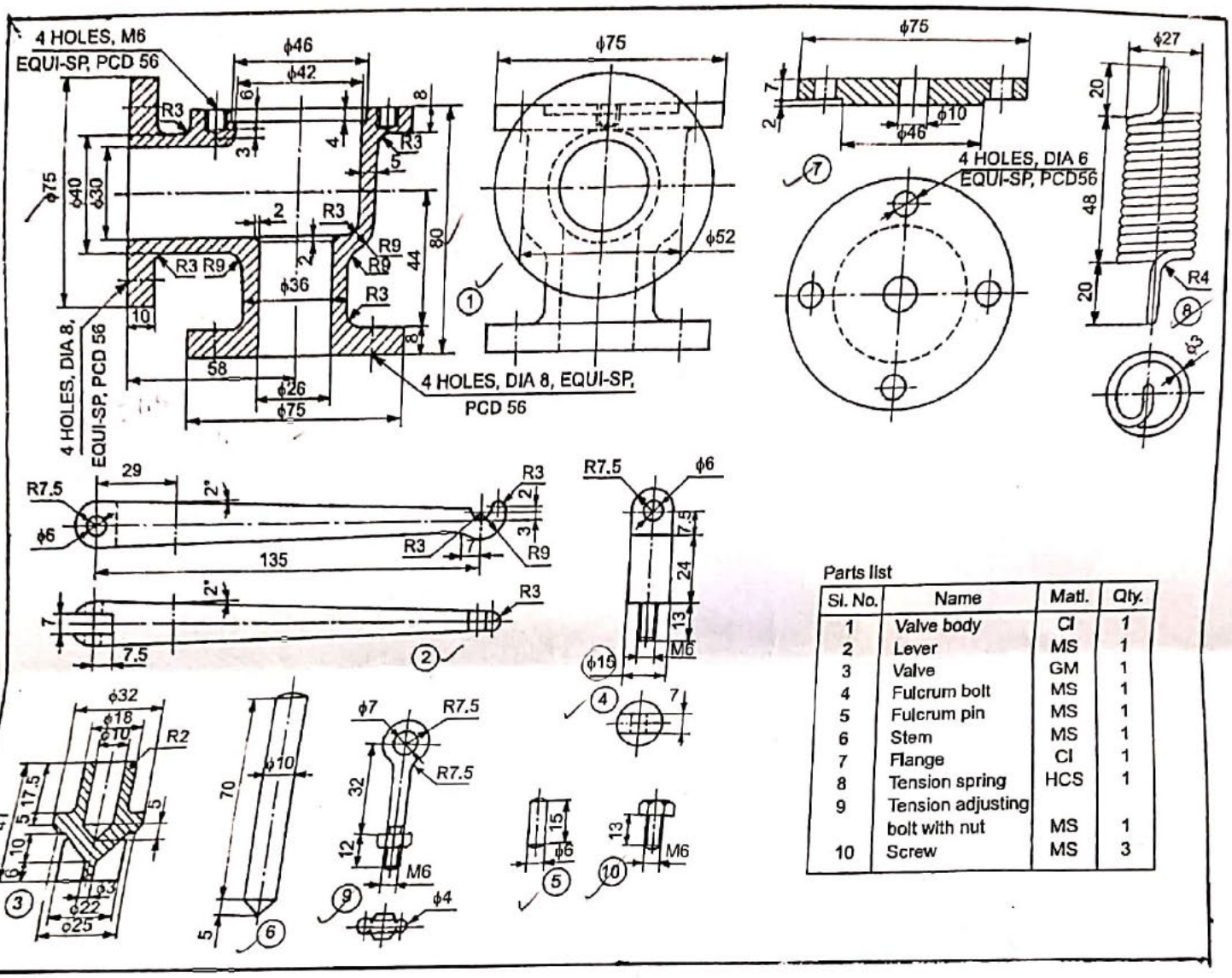

Parts list

Sl. No.	Name	Matl.	Qty.
1	Valve body	CI	1
2	Lever	MS	1
3	Valve	GM	1
4	Fulcrum bolt	MS	1
5	Fulcrum pin	MS	1
6	Stem	MS	1
7	Flange	CI	1
8	Tension spring	HCS	1
9	Tension adjusting bolt with nut	MS	1
10	Screw	MS	3