Study Material For Boiler Operation Engineer (BOE) Exams

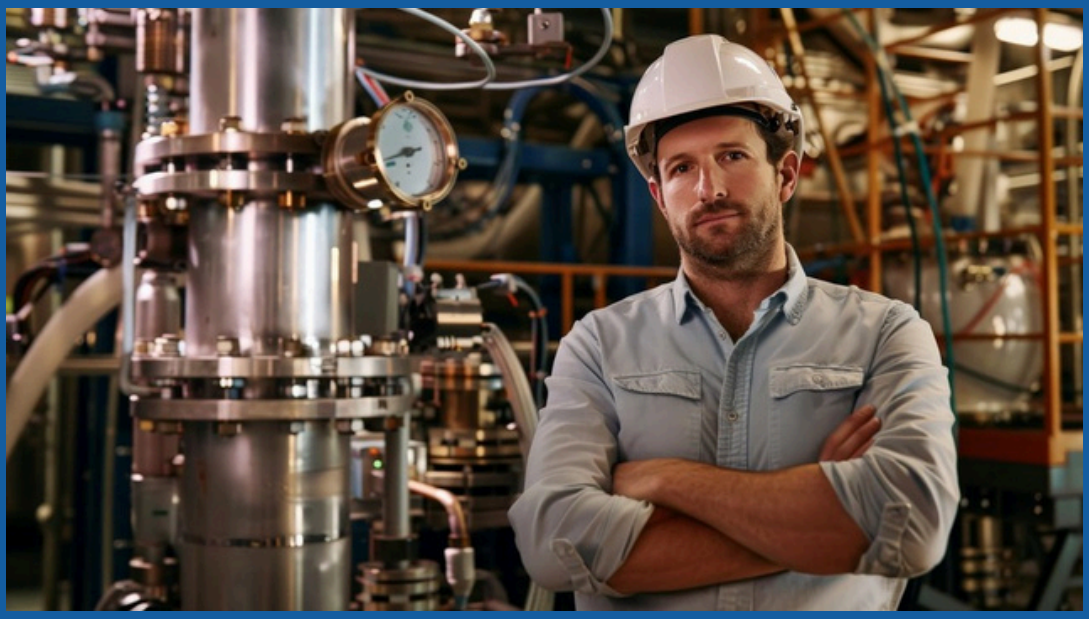

Theory, Numerical Problems, MCQs and Boiler Drawing Problems from BOE Exams

Amazon Flipkart Pothi

PROENGR.IN

SUDESH K JAIN

Chhattisgarh Boiler Operation Engineer Examination 2017

Time 3 hours | **Boiler Engineering Paper 1** | Max Marks 100

Note:- All Questions are compulsory

SECTION A

Q.1 Choose the correct answer. (Write the choice a,b,c or d only in answer sheet) (1 marks each)

1	Air cycle efficiency for a petrol engine havingcompression ratio of 5:1 will be	
	a 47.5%	b 50%
	c 60%	d 90%
2	Mineral Oils are	
	aUnstable	b Poor in oiliness
	c Costly	d Easily Oxidized
3	What is the smallest particle of an element which can take part in a chemical reaction	
	a molecule	b electron
	c atom	d compound
4	A boiler stay is A buckstay is	
	a used to hang boiler drum	b bottom support for boiler
	c used to hang waterwall	d support for furnace walls
5	Heat rate of steam turbine is expressed as	
	a Kcal/kWhr	b Kcal/kW
	c Kcal/hr	d kg/kWhr°C
6	The following gas is used in tungsten inert gas welding process	
	aAcetylene	b Argon
	c Oxygen	d Hydrogen
7	If a refractory contains high content of silicon, it means refractory is	
	aAcidic	b Basic
	c Neutral	d Brittle
8	In a centrifugal pump the liquid enters the pump	
	a at the top	b from the sides
	c at the bottom	d at the centre
9	Oil in journal bearing should be applied at the point where load is	
	a Nil or lightest	b maximum
	c average	d any one of above
10	Which of the following is used for bearing liner	
	a gun metal	b babbit metal
	c brass	d bell metal

SECTION B (4 marks each)

Q. 2 a) Convert the following readings of pressure to kPa, assuming that the barometer reads 760 mmHg:

(i) 90 cmHg gauge
(ii) 40 cmHg vacuum
(iii) 1.2 m H_2O gauge
(iv) 3.1 bar

b) The piston of an oil engine, of area 0.0045 m^2, moves downwards 75 mm, drawing in 0.00028 m^3 of fresh air from the atmosphere. The pressure in the cylinder is uniform during the process at 80 kPa, while the atmospheric pressure is 101.325 kPa, the difference being due to the flow resistance in the induction pipe and the inlet valve. Estimate the displacement work done by the air finally in the cylinder.

c) What may be the cause of a fall in condenser vacuum in the surface condenser?

d) 680 kg of fish at 5°C are to be frozen and stored at – 12°C. The specific heat of fish above freezing point is 3.182, and below freezing point is 1.717 kJ/kg K. The freezing point is – 2°C, and the latent heat of fusion is 234.5 kJ/kg. How much heat must be removed to cool the fish, and what per cent of this is latent heat?

e) Who is Technical Adviser as per the IBR Act?

f) What is Emulsification of Oil and What is Steam Emulsion Number ?

g) What is the difference between galvanizing and tinning?

h) What boilers are exempt from the perview of Indian Boiler Act?

i) What are volatile matters and how do we determine them in Proximate analysis?

j) Why hardness of water is expressed in terms of $CaCO_3$ equivalent?

k) As per IBR Act, when does certificate authorizing the use of boiler (Form 6) cease to be in force?

SECTION C

(6 marks each)

Q. 3 a) A hollow shaft of external diameter 120 mm transmits 300KW power at 200 rpm. Determine the maximum internal diameter if the maximum stress in the shaft is not to exceed 60 N/mm^2

b) Two steel plates 10 cm wide and 1.25 cm thick are to be joined by double lap weld joint. Find the length of the weld if the maximum tensile stress is not to exceed 75 N/mm^2 and Max tensile load carried by the plate is 100 kN

c) What should be the basic desirable qualities of drum internals?

d) Calculate the amount of lime and soda required for softening of a hard water sample 20,000 litres containing $Mg(HCO_3)_2$ = 73mg/L , $Ca(HCO_3)_2$ = 162 mg/L , $MgCl_2$ = 95 mg/L, $CaSO_4$ = 136 mg/L

e) Explain various ash handling systems?

SECTION D

(8 marks each)

Q. 4 Describe the Indirect Method of calculating Boiler Efficiency in detail

Q. 5 Find the volume of air required for complete combustion of 1 m^3 of Acetylene and the weight of air necessary for the combustion of 1 Kg of Acetylene.

Chhattisgarh Boiler Operation Engineers examination 2017

Boiler engineering : Paper II

Time : 3 Hrs

Max marks : 100

Q1 Choose the correct answer. 1X 20

Q1-In throttling process

a) Steam temperature remains constant
b) Steam enthalpy remains constant
c) Steam pressure remains constant
d) Steam entropy remains constant

Q2-Latent heat of steam with increase of pressure

a) Remains same
b) Decreases
c) Increases
d) Behaves unpredictably

Q3-For burning 1 Kg of carbon to CO as per chemically correct combustion, amount of air required as

a) 1 kg
b) 8/3 kg
c) 4/3 kg
d) 2 kg

Q4-Which of the following substance will have same percentage in both proximate and ultimate analysis?

a) Ash
b) Moisture
c) Volatile matter
d) Hydrogen

Q5-With increase in load, radiant superheater has

a) Drooping characteristic
b) Rising characteristic
C) Linear characteristics
d) Flat characteristic

Q6-The temperature of flue gases at air heater outlet should be

a) 100 C
b) Below dew point temperature of flue gases
c)Above dew point temperature of flue gases
d)Less than wet bulb temperature of flue gases

Q7-Incomplete combustion can be best judged by

a) Smoky chimney exit
b) Measuring carbon mono oxide in flue gas
c)Excess air in flue gas
d)Measuring temperature of flue gases at exit of furnace

Q8-A supercritical Boiler is one that operates above the pressure and temperature of following values

a) 100 kg/cm2 and 540 C
b) 218 kg/cm2 abs and 373 C
c) 1kg/cm2 and 100 C
d) 218 kg/cm2 abs and 540 C

Q9-Film boiling occurs at

a) Very low pressure
b) Medium pressure
c) Atmospheric pressure
d) Very high pressure

Q10-The feed check valve is used in order to

a) Regulate flow of Boiler water
b) Recirculate unwanted feed water
c)Check level of water in Boiler drum
d)Allow high pressure feed water to flow to drum and not allow reverse flow to take place

Q11-Deaeration of feed water is carried out because it reduces

a) Cavitation of Boiler feed pumps
b) Heat transfer co efficient
c) Corrosion caused by oxygen
d) pH value of water

Q12-Scale formed on heat transfer surfaces when

a) water is acidic
b) water contains dissolved gases
c) water is alkaline
d) water contains dissolved calcium and magnesium salt

Q13-Orsat apparatus is used to determine the

a) combustion efficiency
b) conductivity of water
c) leakage of air into Boiler
d) analyzing the flue gas on the spot

Q14-Stoichiometric quantity of air is the

a) air present in atmosphere at NTP condition
b) air required for complete combustion of fuel with no excess air
c) air required for optimum combustion so as to have reasonable excess air
d) air required to convert CO into CO2

Q15-A wet vapour can be completely specified by

a) pressure only
b) dryness fraction only
c) temperature only
d) pressure and dryness fraction

Q16-100% efficiency of thermal cycle cannot be achieved because of

a) frictional losses
b) leakage
C) it is not possible to achieve $0^{\circ}K$ temperature
d) non availability of ideal substance

Q17-Which of the following gases has the highest calorific value?

a) Producer gas
b) Coke oven gas
c) Coal gas
d) Blast furnace gas

Q18- Efficiency of thermal cycle increases by

a) Regeneration
b) Reheating of steam
c) Both (a) and (b)
d) Cooling of steam

Q19-Natural water circulation in water tube boilers, with increase in pressure of boiler

a) Increases
b) Remains unaffected
c) Decreases
d) First increase then decrease

Q20-During storage , the heating value of coal

a) Increases
b) Remains constant
c) Decreases
d) May increase or decrease depending upon method of storage

Q2) Answer the following questions with short answers 2X10

Q a) What should be the design considerations in the selection of a waste heat Boiler?

Q b) Why are supercritical once- through units preferred to subcritical drum-type units-800MW and above?

Q c) In which case are fluidized-bed field erected boilers preferred to suspension fired boilers?

Q d) One bowl mill feeds four burners placed at different locations in the boiler unit. How is the same flow rate maintained all through?

Q e) For what purpose is a blow-off cock fitted?

Q f) If you find the water level cannot be restored immediately, what will you do?

Q g) Why is the safety valve of super heater set at a lower pressure than the safety valve of the boiler drum?

Q h) Why is artificial draught required?

Q i) What is the most dangerous concentration of coal dust in air?

Q j) What indicates the exhaustion of an anion exchanger?

Q3) Answer following questions 5 X 8

Q 1) In which cases must a boiler be shut down immediately?

Q 2) What are the advantage of forced draught over the induced draught?

Q 3) What is fluidized-bed combustion?

Q 4) If the particle resistivity is higher than critical level of resistivity ,how will it affect the ESP's performance?

Q 5) How is a mixed bed demineralizer regenerated?

Q 6) How is preservation of Boilers by wet method carried out ?

Q 7) What are the drawbacks of slag bottom furnace ?

Q 8) Into how many zones can a Boiler be divided on the basis of mode of heat transfer ?

Q 4) Answer any 2 of the following questions 2X 10

Q A) - A Boiler produces 220 T of dry saturated steam per hour at a pressure 60 kgf/cm^2 abs, from feed water at a temperature of 120° C.

Coal consumption = 1200 T/day

Calorific value of coal = 4200 kcal/kg

1% coal escape un burnt

Enthalpy of dry saturated steam at 60 Kgf / cm^2 abs = 665.4 Kcal/ Kg

Determine

(a) The equivalent evaporation per ton of coal fired

(b) The efficiency of the boiler

Q B) – A Coal sample having the following composition by weight :

C-75 %, H- 5.25 % , O- 9.7 % , N- 1.38 %, S- 0.95 % , Moisture- 4.75 % , Ash -2.97 % is to be burned in air

Determine the volume of air requirement to burn 1 Kg of Coal.

Q C) Which IBR regulation talks about ageing of Boiler ? Mention the tests with reasons to be carried out in this section to ascertain the healthiness of water tube Boilers

CHHATTISGARH BOILER OPERATION ENGINEERS EXAMINATION - 2017

Time : 4 Hrs **Max Marks : 100**

DRAWING

All questions are compulsory

Q 1 The given figure shows two orthographic views of a machine block

i) Draw the isometric drawing to full scale (25)

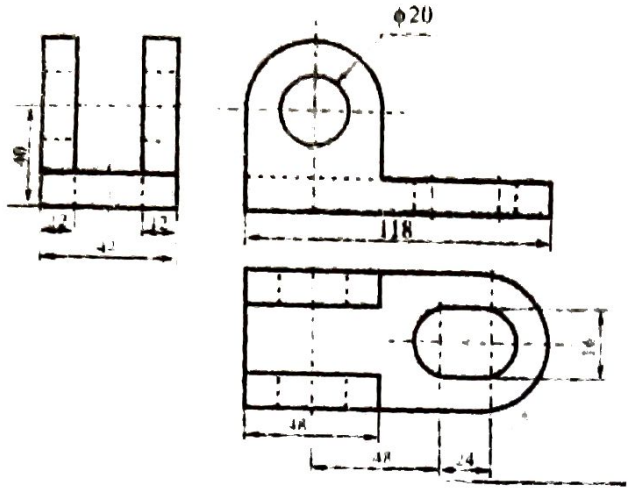

Q 2 Project Front view, Side view and Top view of the machine block, shown below, to full scale.

(7 + 6 + 7)

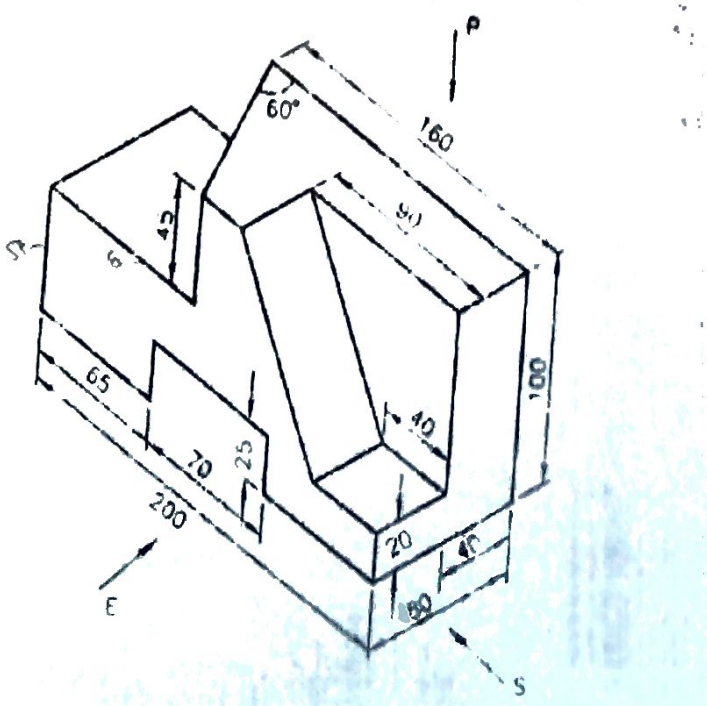

Q 3) Draw free hand drawings along with symbols for any 10 of the following type of Welded joints (20)

1. Fillet
2. Square Butt
3. Single-V Butt
4. Double-V Butt
5. Single-U Butt
6. Double-U Butt
7. Single-Bevel Butt
8. Double-Bevel Butt
9. Single-J Butt
10. Seam
11. Edge
12. Spot

Q 4) The figure given shows two views of a flange coupling. Draw the Full sectional front view (15)

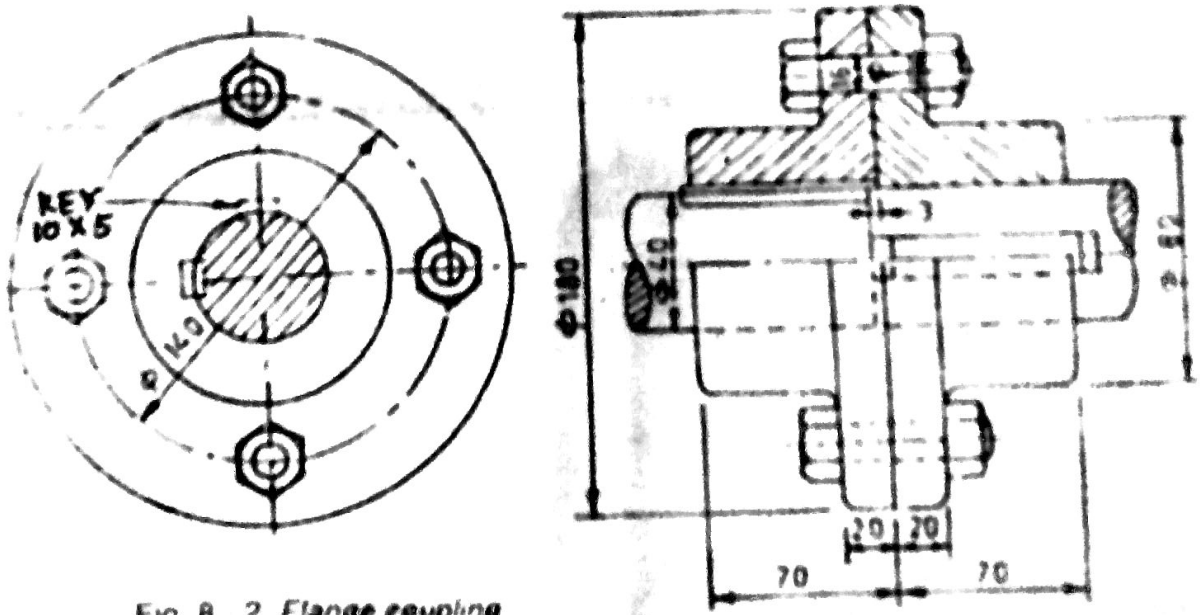

Fig A 2 Flange coupling

Q 5) Draw the sectional front view and top view of a single riveted single cover butt joint. Take the diameter of the rivet d= 24 mm and thickness of the plate t = 16 mm (cover plate thickness = 1.125 t) (8 +12)