Study Material For Boiler Operation Engineer (BOE) Exams

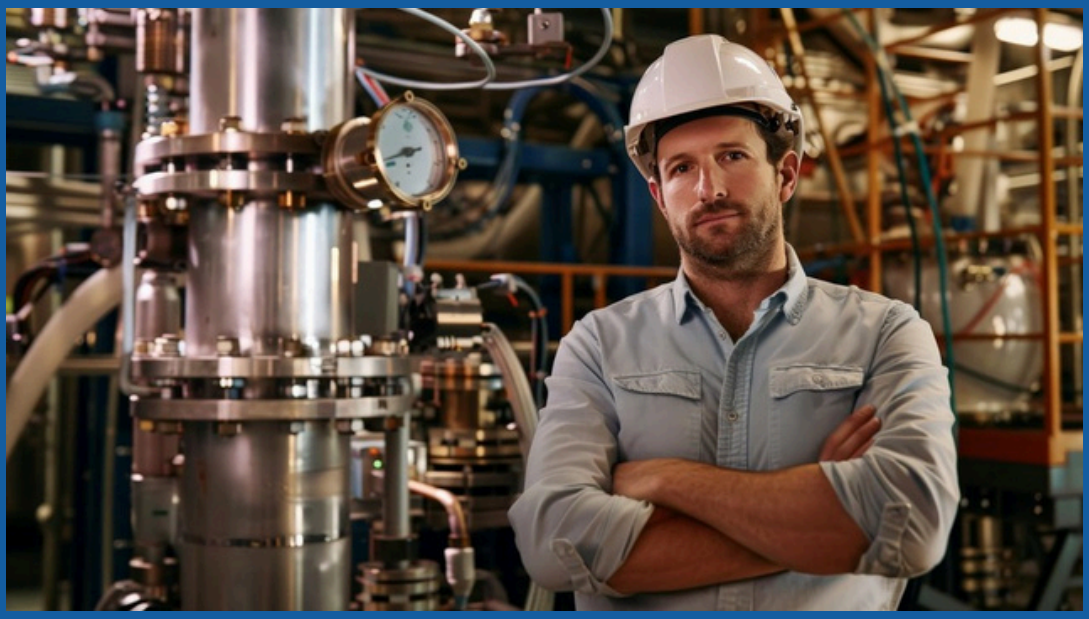

Theory, Numerical Problems, MCQs and Boiler Drawing Problems from BOE Exams

Amazon Flipkart Pothi

PROENGR.IN

SUDESH K JAIN

CG BOE-2016 Paper-1

Chhattisgarh Boiler Operation Engineer Examination 2016

Time 3 hours

Boiler Engineering Paper 1

Max Marks 100

Note:- All Questions are compulsory

SECTION A

Q. 1 Choose the correct answer. (Write the choice a,b,c,d only in answer sheet) (1 marks each)

1	For burning one Kg of Carbon to CO as per chemically correct combustion, amount of Air required is			
	a	1 kg	b	4/3 kg
	c	8/3 kg	d	16/3 kg
2	Thermal conductivity of wood depends on			
	a	Temperature	b	Moisture
	c	Density	d	All of above
3	When the temperature of a body is increased, the stress induced will be			
	a	Tension	b	Compression
	c	Both Tension & Compression	d	Neither Tension & Compression
4	The longitudinal joint of a boiler shell is always a			
	a	Lap joint	b	Butt joint
	c	Diamond joint	d	Lozenge joint
5	The ratio of maximum shear stress to hoop stress in a thin cylindrical pressure vessel is			
	a	4	b	2
	c	1	d	1/4
6	The latent heat of steam with increase of pressure			
	a	increases	b	Decreases
	c	remains same	d	behaves unpredictably
7	At critical point, the latent heat of vapourization is			
	a	maximum	b	minimum
	c	zero	d	none of the above
8	Which of these substance will have same percentage both in ultimate and proximate analysis			
	a	Volatile matter	b	Moisture
	c	Ash	d	Hydrogen
9	Free surface of a liquid tends to contact to smallest possible area due to force of			
	a	Surface tension	b	Adhesion
	c	Cohesion	d	Cohesion
10	Two plane slabs of equal area and conductivities in the ratio of 1:2 are held together. The temperature in between surface ends are T1 and T2. Find the ratio of their thickness to maintain an average temperation at junction.			
	a	1:2	b	2:1
	c	3:1	d	1:3

CG BOE-2016 Paper-1

SECTION B

Q. 2 (2 marks each)

a) What is ultimate analysis of coal?

b) What is blowdown?

c) What is the flash point of a liquid fuel?

d) What are the basic advantages of Globe valve over gate valve?

e) What is the effect of pressure on steam water separation?

f) Why are extra precautions necessary to bring a vertical superheater in line?

g) What factors influence spontaneous ignition of coal?

h) Why should the ID Fan be located where the flue gas temperature is lowest?

i) What is Octane number of a liquid fuel?

j) How is the ash content of coal determined?

k) Why are austentic steels not used to enable the tubes to operate above 540°C ?

l) What is an attemperator?

SECTION C

(5 marks each)

Q. 3 a) Hydrazine hydrate but not hydrazine sulphate can be used as a suitable deoxygenation reagent in once through Boiler units. Why?

b) Why does Silica slippage in the treated water of a D M Plant occur?

c) List any five common losses of boilers and Which loss is unique to boilers and does not occur in furnaces?

d) What are the advantages of supercritical Boilers over subcritical Boilers?

e) What is Mollier's Diagram? Describe in brief the various salient features?

f) What are advantages of FBC Boilers

CG BOE-2016 Paper-1

(6 marks ea

SECTION D

Q 4 a) Describe briefly a Benson Boiler.What are the advantages of a Benson Boiler?

b) What is the Hydraullic test pressure norms for Boiler in new, annual inspectionand repaired boilers? Describe briefly the preparation of Annual HT inspection.

c) The following data refer to an economiser attached to a boiler in a college laboratory Temp of feed water in the feed tank = 22 °C, Temp. of water entering at the economiser = 55 °C, Temp. of water leaving the economiser = 95 °C, Temp. of flue gases entering the economiser is 300 °C and leaving is 150 °C. The air supplied per kg of coal is 16 kg. Determine the amount of steam generated in the boiler per kg of coal burnt, if the specif. heat of flue gases is 0.24.

(6 marks each)

SECTION E

Q. 5 A Coal containing 81% Carbon with a calorific value of 32400kJ/Kg is burnt to produce a flue gas of the following composition by volume

CO_2 – 13% , CO – 1.25% , O_2 – 5.5% , N_2 – 80.25%

Calculate the

i) weight of carbon converted to CO per kg of coal (3 marks)

ii) percentage heat lost due to incomplete combustion (3 marks)

Given that

$C_{(s)} + O_{2(g)} \longrightarrow CO_{2(g)} + 34071.71$ kJ/Kg of C

$C_{(s)} + \frac{1}{2}O2_{(g)} \longrightarrow CO_{(g)} + 10268.61$ kJ/Kg of C

Q. 6 A cylindrical water tank having vertical axis is open at the top. Its inside diameter is 3m and the height is 25m. The tank is full of water and is made of structural steel having yield stress of 220 MN/m^2. Determine the thickness of the steel sheet used if the efficiency of longitudinal joint is 70% and the factor of safety is 3. Given specific weight of water $\gamma = 9806.65$ N/m^3.

CG BOE-2016 Paper-1

Q.7 The following data refers to a boiler

Fire grate size --------1.96 metre long x 2.0 metre wide

Consumption of coal -----140 kg/m^2/hr

Water evaporated--------6.0 kg/kg of coal

Feed water temp.---------20 C

Pressure of steam--------5.0 bar & Quality of steam --------Dry and saturated

Find coal consumption in tones per day & water evaporated in m^3 per day.

Take Boiler efficiency ---- 50% & CV of coal -------- 32000 KJ/kg

Given Enthalpy of steam at 5 bar is 2748.7 KJ/Kg

CG BOE-2016 Paper-2

Chhattisgarh Boiler Operation Engineers Examination 2016
Boiler Engineering Paper - II

Time: 3 Hours **Maximum Marks ; 100**

Q-1 Choose the correct answer **20x1= 20 Marks**

1. In the modern boiler, for the flue gas flow, the correct sequence is
   a)Boiler-Air preheater- economizer- ID fan- Chimney
   b) Boiler- ID fan -Air preheater- Economizer- Chimney
   c) Boiler- Economizer- Air preheater- ID fan- Chimney
   d) None of the above
2. Induced draft fans are used to:
   a) cool the steam let out by the turbine in the thermal power station
   b) cool the hot gases coming out of boiler
   c) forces the air inside the coal furnace
   d) pull the gases out of furnace
3. In a AFBC Boiler the size of coal used is
   (a) 1–10 mm
   (b) 10–100 mm
   (c) less than 1 mm
   (d) 10–20 inches
4. The indication to determine the incomplete combustion is:
   a) high percentage of carbon dioxide content in the flue gases
   b) high percentage of CO content in the flue gases
   c) high temperature of the flue gases
   d) all the above
5. Economizer of boiler has main function of:
   a) heat up the incoming water with excess steam
   b) heat up the pulverized fuel by exhaust gases
   c) heat up the incoming air by exhaust gases
   d) heat up the incoming water by exhaust gases
6. The steam power plant efficiency can be improved by:
   a) using large quantity of water
   b) burning large quantity of coal
   c) using high temperature and pressure of steam
   d) decreasing the load on the plant
7. The size of boiler tubes is specified by
   a) Outside diameter and inside diameter.
   b) Mean diameter and thickness.
   C) Outside diameter and thickness.
   d) Inside diameter and thickness.
8. Blow down from the boiler drum is carried out to
   a) Lower steam pressure.
   b) Increase steam temperature.
   c) Control the solids concentration in boiler water.
   d) All of the above.

CG BOE-2016 Paper-2

9 The material used in water wall of boiler is
a) Carbon steel
b) Alloy Steel
c) Stainless steel
d) None of the above

10 A system in which the boiler operates with a FD and ID fan is called
a) Natural draft
b) Forced draft
c) Induced draft
d) Balanced draft

11 The function of lime stone used as bed material FBC boiler is to remove
a) ash
b) sulphur and NOx
c) un-burnts
d) sulphur

12 Stack heights in more than 200mw but less than 500MW
a) 120 mtr
b) 175 mtr
c) 220 mtr
d) 275 mtr

13. Environment (Protection) Amendment Rules, 2015. Thermal Power Plant (units) insta after 1st January,2003, upto 31st December, 2016 Oxides of Nitrogen (NOx) should more than
a) 100 mg/Nm3
b) 300 mg/Nm3
c) 600 mg/Nm3
d) 900 mg/Nm3

14 The difference between mean solid and mean gas velocity in FBC boiler is called
a) fluidization factor
b) slip velocity
c) settling velocity
d) none of the above

15. Rotameter is used for measurement of
a) speed
b) length
c) flow
d) time

16 In a CFBC boiler the capture and recycling of bed materials is accomplished by
a) bag filter
b) settling chamber
c) cyclone
d) scrubber system

17. In a single-stage, high-voltage ESP, the applied voltage is increased until it produces a(a
a. Extremely high alternating current for particle charging
b. Corona discharge, which can be seen as a blue glow around the discharge electrode
c. Corona spark that occurs at the collection electrode
d all of the above

18. The efficiency of collection in ESP will _____ if the ESP inlet temp increases
a) Increase

19 True
towa

20. True
sma

Q-2 Writ
2.1
2.2
2.3
2.4
2.
2

CG BOE-2016 Paper-2

b) decrease
c) remain the same
d) first increase than decrease.

19 True or False? In ESP, particles are usually charged by negative gas ions that are migrating toward the collection electrode

20. True or False? In ESP, large particles move more slowly towards the collection plate than small particles.

Q-2 Write in short note **2x10 – 20 Marks**

2.1 IBR steam pipe
2.2 Boiler Master Fuel trip relay (MFT)
2.3 Chimney
2.4 pH value
2.5 Critical point of steam
2.6. Slagging or fouling in boiler
2.7 Tangential firing with respect to pulverized coal fired boiler
2.8 Super heat of steam
2.9 Priming& Foaming.
2.10 3 T's of Combustion

Q-3 Answer <u>any 6 questions</u> from following: **6x5=30 Marks**

3a What are the factors affecting for a coal mill performance?

3b What is soot blowers and their types? Write in brief.

3c Advantages of mechanical draught over natural draught.

3d What are main reasons of boiler tube leakage?

3e What is Ramanant Life assessment (RLA) study? Mention various tests performed

3f How is the fly ash removed in the FBC Boiler?

3g Write function of water wall drum in a water tube boiler.

3h What are the methods are used for steam temperature control in boiler.

CG BOE-2016 Paper-2

10x3 =30 Marks

Q-4 Answer any 3 questions from following:

4A. What are the causes for furnace explosion and what step to be taken to avoid this situation?

4B. Boiler preservation and it's necessary? Explain types of preservation

3 Marks

4C. (I) What is the need for boiler feed water treatment?

(ii) Determine height and diameter of chimney to produce static draught of 18 mm of water column if mean flue gas temperature and flow rate are 300 C and 2100 kg/min respectively, the atmospheric air temperature is 25 C. The gas constant for air is 287 KJ/ Kg K. and for flue gas 250 KJ/Kg K. Assume no loss of draught in chimney and barometer reading is 760 mm of mercury.

7 marks

4D (i). Why is the safety valve of the Superheater set at lower pressure than of the boiler drum?

3 marks

(ii) Calculate the fuel oil savings by providing an Economiser for a boiler. The performance data of the boiler are given as below:

Average quantity of steam generated	: 5 T/h
Average flue gas temperature	: 315 °C (without economiser
Average steam generation / kg of fuel oil	: 14 kg
Feed water inlet temperature	: 110°C
Fuel oil supply rate	: 314 kg/h
Flue gas quantity	: 17.4 kg/kg of fuel
Gross calorific value of fuel	: 10,000 kCal/kg
Rise in feed water temperature by providing economizer	: 26 °C
Annual operating hours	: 8600

7 marks

CG BOE-2016 Paper-3

CHHATTISGARH BOILER OPERATION ENGINEERS EXAMINATION - 2016

Time : 4 Hrs **Max Marks : 100**

DRAWING

Q 1 The given figure shows two orthographic views of a machine block

(i) Draw the 3rd View (5)

(ii) Draw the isometric drawing to full scale. (15)

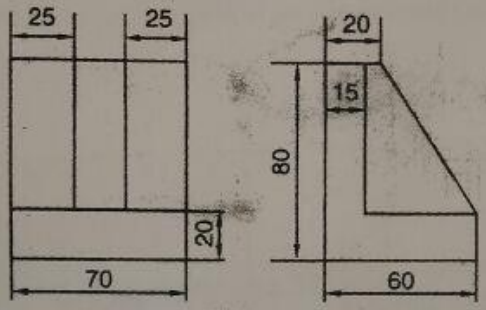

Q 2 Project Front view, Side view and Top view of the machine block, shown below, to full scale. (7+6+7)

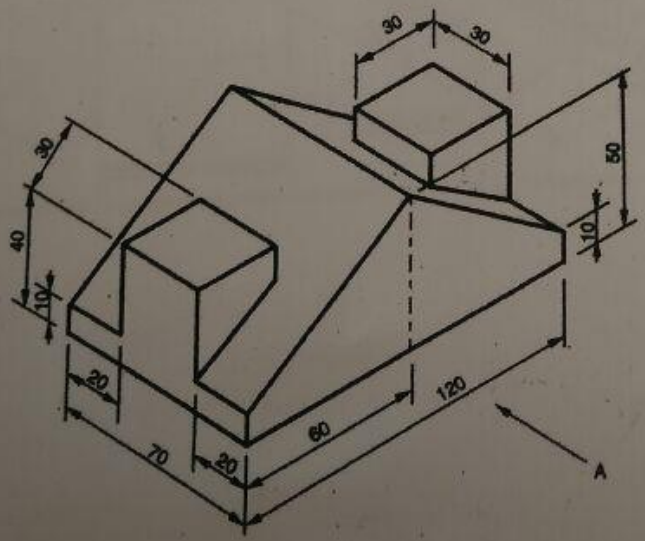

CG BOE-2016 Paper-3

Q 3) Draw Front view, Side view and Top view of a hexagonal headed bolt 24 mm with hexagonal nut and a washer. Shank length of the bolt is 100 mm. **(7 + 6 + 7)**

Q 4) The figure shows the assembly of a Bushed Bearing with left hand side in section. Dissemble the parts as per the directions given below and draw the following:

(a) Full sectional front view of the BODY looking in the direction of arrow A and side view **(15)**

(b) Full sectional front view of the BUSH looking in the direction of arrow A and side view **(5)**

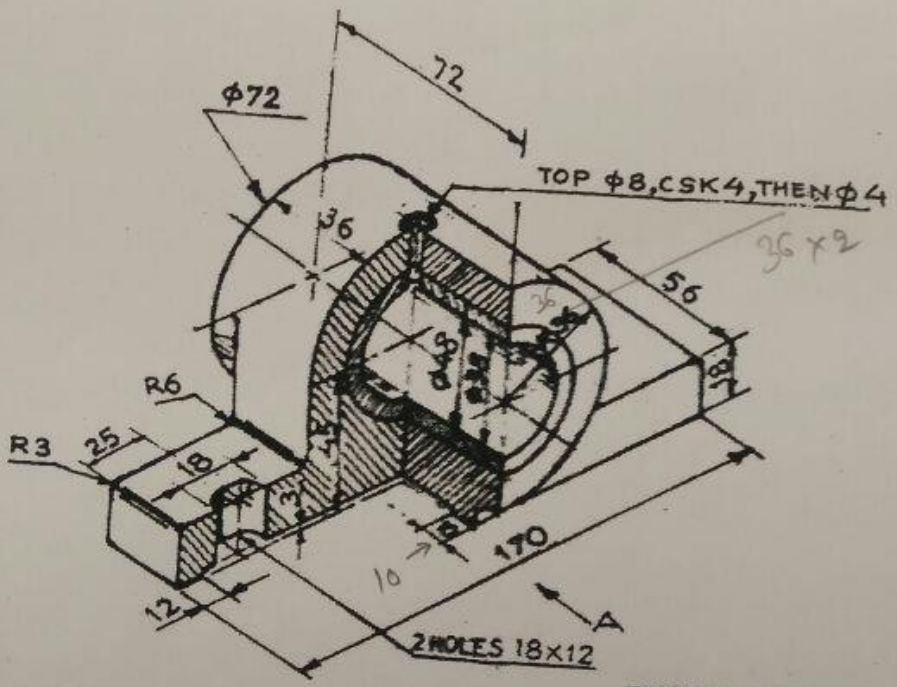

BUSHED BEARING

CG BOE-2016 Paper-3

Q 5) Some commonly used symbols on pipe drawing are given in the table below. Write the name of any 20 symbols . (20)

