Study Material For Boiler Operation Engineer (BOE) Exams

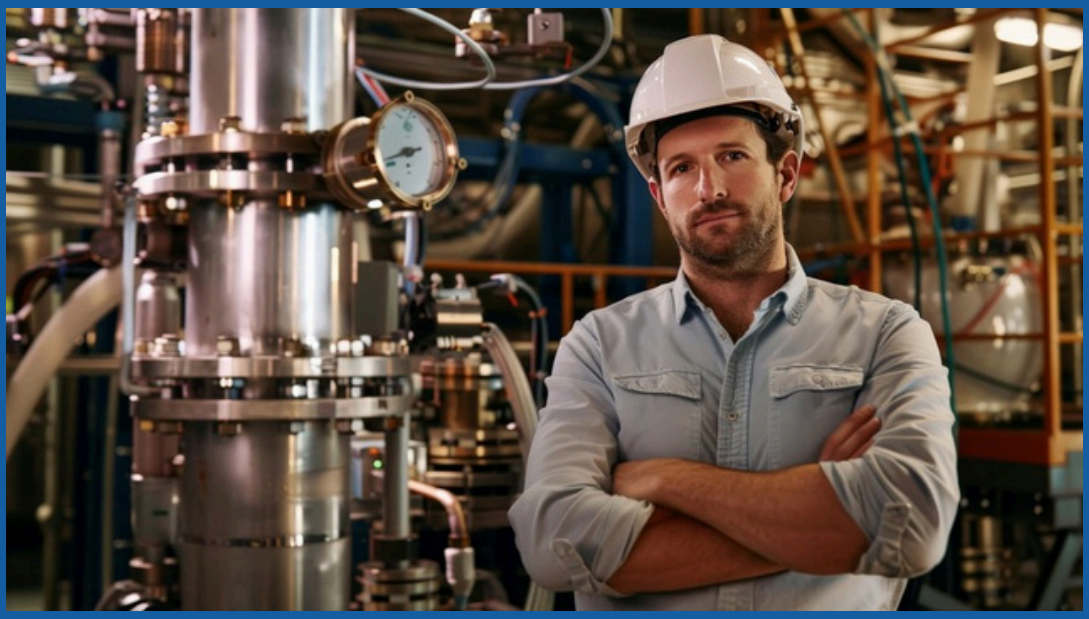

Theory, Numerical Problems, MCQs and Boiler Drawing Problems from BOE Exams

Amazon Flipkart Pothi

PROENGR.IN

SUDESH K JAIN

Regn. No._____ **Paper - 1**

Name : _____

(To be written by the candidate)

SIXTH EXAMINATION FOR RECOGNITION OF COMPETENT PERSONS FOR INSPECTION & CERTIFICATION OF BOILERS - 2nd FEBRUARY 2020

BOILER ACT, INDIAN BOILER REGULATIONS AND THEIR COMPLIANCE AND BOILER DESIGN ENGINEERING

Date : 02/02/2020 **Time : 09:30 - 12:30 Hrs.** **Max. Marks : 150**

GENERAL INSTRUCTIONS :

1. **This Question paper contains two parts - Part - A & B.**
2. **Part - A contains multiple choice questions. Please use OMR sheet to answer these questions.**
3. **Part - B contains descriptive questions. Please use answer paper to answer.**
4. **All questions in Part-A & B are compulsory.**

Part-A **(50 X 1 = 50 marks)**

(i) Answer all the **50** questions

(ii) Each question carries **one** mark

(iii) Use OMR Sheets to answer

1. As per the Boilers Act, 1923 competent authority can
   a. Inspect and certify boilers and components
   b. Issue certificate to the welders for welding the boiler and components
   c. Register boilers
   d. Frame the Indian boiler regulations

2. As per The Boilers Act, 1923 penalty for breach of rules for the first offence is
   a. Fine which may extend to INR ten thousand
   b. Fine which may extend to INR five thousand
   c. Fine which may extend to INR one thousand
   d. Fine which may extend to INR two thousand

3. A coil type boiler with a volumetric capacity of 23 litres, installed in a process plant, generates steam at 7 kg/cm^2 (g) for oil heating application. Which of the following is true about this boiler?

   a. It comes under the purview of Boilers Act, 1923 as its working pressure is above 1 kg/cm^2 (g)

   b. It does not come under the purview of Boilers Act, 1923 as its volumetric capacity is less than 25 litres

   c. It does not come under the purview of Boilers Act, 1923 as the steam generated is not used external to itself

   d. It comes under the purview of Boilers Act, 1923 as its water is heated above 100^{0}C

4. A carbon steel steam pipeline of 273 mm outside diameter and 12.7 mm thickness is laid in a sugar factory to carry steam at 3 kg/cm^2 for its refinery division. Which of the following is true about this steam pipeline?

   a. It comes under the purview of Boilers Act, 1923 as its outside diameter exceeds 254 mm and steam pressure exceeds 1 kg/cm^2 (g)

   b. It does not come under the purview of Boilers Act, 1923 as its inside diameter does not exceed 254 mm and steam pressure does not exceed 3.5 kg/cm^2 (g)

   c. It does not come under the purview of Boilers Act, 1923 as its inside diameter does not exceed 254 mm and pipe material is carbon steel

   d. It comes under the purview of Boilers Act, 1923 as its average diameter exceeds 254 mm and steam pressure exceeds 1 kg/cm^2 (g)

5. Registry Number of a boiler is T/5658. The 'T' in the number indicates that it is a

   a. Tower type boiler b. Triple pass boiler

   c. Tubular boiler d. None of the above

6. Rating of a boiler as entered in its Certificate in Form VI refers to

   a. Heating surface area of the boiler in square metre

   b. Steaming capacity of the boiler in kg/hr

   c. Volumetric capacity of the boiler in cubic metre

   d. None of the above

7. For boiler quality steel materials used for fabricating boiler components at design temperatures above 454^{0}C, allowable stress is determined by

   a. Creep Strength at design temperature & Yield Strength at design temperature

   b. Creep Rupture Strength at design temperature

   c. Both (a) & (b)

   d. None of the above

8. Which of the following is true about a coil type small industrial boiler regulated in Indian Boiler Regulations, 1950?

   a. Its pressure is limited to 12 kg/cm^2

   b. Its volumetric capacity is limited to 150 litres

   c. Both (a) & (b)

   d. None of the above

9. A welder qualification certificate is issued in

   a. Form II b. Form III

   c. Form XII d. Form XIII

10. A welder is issued certificate for alloy steel plate welding in flat position. Which of the following is true?

    a. He is qualified to weld alloy steel plate in horizontal position

    b. He is qualified to weld carbon steel plate in flat position

    c. He is qualified to weld carbon steel plate in horizontal position

    d. All of the above

11. Form III-F pertains to

    a. Forging b. Casting

    c. Tube d. Pipe

12. Form II is issued by

    a. Inspecting authority b. Competent authority

    c. Competent person d. None of the above

13. Steel Maker's certificate is issued in

a. Form IV
b. Form XII
c. Form III
d. None of the above

14. Any part of a feed pipe that is wholly or partially exposed to the flue gases for the purpose of recovery of waste heat is

a. Superheater
b. Reheater
c. Economiser
d. High pressure heater

15 For a boiler having an outer diameter greater than 3 feet 6 inches, but not exceeding 4 feet, the manhole or sight hole sizes shall be

a. 12 inches x 9 inches
b. 14 inches x 10 inches
c. 16 inches x 12 inches
d. 15 inches x 11 inches

16 For ordinary lift safety valve

a. Valve head lifts automatically a distance of at least D/24
b. Valve head lifts automatically a distance of at least D/12
c. Valve head lifts automatically a distance of at least D/16
d. Valve head lifts automatically a distance of at least D/8

17. The temperature of the water used as medium for hydraulic testing shall be

a. Between 30^0C to 60^0C
b. Between 0^0C to 40^0C
c. Between 15^0C to 35^0C
d. Between 20^0C to 50^0C

18. For Shell type boilers considering the ageing effect on boilers, the working pressure shall be reduced after 35 years to

a. 30%
b. 90%
c. 95%
d. 75%

19. For Shell type boilers, thickness of plain furnace shall be

a. Between 7 mm to 22 mm
b. Between 8 mm to 25 mm
c. Between 10 mm to 30 mm
d. Between 12 mm to 32 mm

20. Certificate issued by Inspecting Authority for site assembled boilers is in

a. Form II-B
b. Form II-A
c. Form II(1)
d. Form II(2)

21. Deviation of circularity of the drums during manufacturing when measured internally

a. Should not exceed 2% of nominal internal diameter
b. Should not exceed 1% of nominal internal diameter
c. Should not exceed 0.5% of nominal internal diameter
d. Should not exceed 3% of nominal internal diameter

22. For measuring upto and including 35 kg/cm^2 the range of pressure gauges shall be

a. From zero to same pressure
b. From zero to thrice the pressure
c. From zero to twice the pressure
d. None of the above

23. For Radiant superheater tubes, the design metal temperature shall be maximum steam temperature plus

a. 11^{0}C
b. 28^{0}C
c. 39^{0}C
d. 50^{0}C

24. The butt joints of boiler drum shall be tested by

a. 10% RT (Radiographical examination)
b. 20% RT
c. 30% RT
d. 100% RT

25. Hydraulic test at the makers's works shall be dispensed with, provided that the tubes are subjected to

a. Non-Destructive testing like UT or Eddy current or Stray flux testing
b. Destructive testing like bend, tensile test
c. Inspecting Authority witnesses the test
d. Not acceptable

26. Minimum length of visible portion of the level gauge glass shall be

a. 100 mm
b. 200 mm
c. 175 mm
d. 150 mm

27. Can a Safety valve in boiler drum have an isolation valve?

a. Not permissible
b. Permissible without any approval
c. Permissible with permission of the competent person
d. Permissible with permission of the Director of Boilers

28. Saturated steam discharge capacity of safety valve is represented by which of the following equation (where E: Rated discharge C: Constant A: Area P: Pressure)

a. $E = CA/P$
b. $E = C/AP$
c. $E = CAP$
d. $E = CP/A$

29. Standard flange size and thickness can be obtained from the

a. Appendix J
b. Appendix JB
c. Appendix JA
d. Appendix E

30. When all the boiler components of the boiler in the manufacturer's premises have not been tested hydraulically during manufacturing, the hydro test on completion of erection shall be subjected to a test pressure of

a. 1.25 times the maximum working pressure
b. 1.15 times the maximum working pressure
c. 2.0 times the maximum working pressure
d. 1.5 times the maximum working pressure

31. Remnant life assessment is mandatory for Boilers operating with main steam temperature more than 400^0C after

a. Operation of 1,00,000 hours
b. Operation of 3,00,000 hours
c. Operation of 4,00,000 hours
d. Operation of 50,000 hours

32. How many water level indicators shall be provided with every boiler?

a. One no. b. Two nos.

c. Three nos. d. Four nos.

33. The Boiler's Act 1923 is not applicable to following device/equipment

a. Flue gas air preheater b. Feed pipe

c. Reheater d. Superheater

34 Boiler Certificate ceases to be in force when,

I It is transferred from one state to another

II Heating surface area of boiler is increased by addition of water wall tubes

III An accident occurs

IV Boiler registration number is not marked upon it within stipulated time

a. I only b. IV only

c. I, II & III d. All of the above

35. A person who fails to report an accident of a boiler

a. Shall be punishable with imprisonment upto 24 months

b. Can be punishable with a fine upto INR one lakh

c. Can be punishable with a fine upto INR one lakh and imprisonment upto 24 months

d. All of the above are true

36. Competent person cannot inspect the Boiler during

a. Manufacture b. Use

c. Registration d. Erection

37. Boiler attendants & Boiler Operation Engineers Rules are framed by

a. Central Government b. State Government

c. Chief Inspector of Boilers d. Boiler Examination Board

38. Accident means

I Weakening of boiler pressure parts

II Heavy bulging of furnace due to low water level in boiler

III Explosion in integral economiser

IV Explosion of "steam pipe" as mentioned in The Boiler's Act 1923

a. I, II
b. I, II, IV
c. II, III, IV
d. All of the above

39. What is the minimum thickness required of stay tube of a boiler having tube diameter 50.8 mm?

a. 2.81 mm
b. 3.12 mm
c. 3.38 mm
d. 2.28 mm

40. What is the extent of RT required for 219.1 mm OD Class I pipe line not subjected to hydraulic test after completion?

a. 10% weld per welder with minimum 2 joints per welder

b. RT not required, as pipeline is going to be hydraulic tested after completion

c. 2% weld per welder with minimum one weld per welder

d. 100%

41. The maximum accumulation of steam pressure allowed during steam test for a boiler is

a. 10%
b. 20%
c. 5%
d. Not allowed

42. Minimum diameter required for branch pipe in welder qualification is

a. 127 mm
b. 141 mm
c. 89 mm
d. Not applicable

43. Which of the following boiler components is partly or wholly exposed to flue gases for the purpose of raising the temperature of steam beyond the saturation temperature at that pressure?

a. Economizer
b. Superheater
c. Water wall
d. Shell

44. How many feed apparatus are required for boiler having heating surface area more than 20 square meters?

a. One
b. Two
c. Three
d. Four

45. Stress relieving soaking temperature for pipe to pipe butt welding of 2¼ Cr 1 Mo material is

a. Atleast 600°C
b. 620°C to 650°C
c. 620°C to 660°C
d. 625°C to 750°C

46. What is the holding time required for hydraulic test of boilers?

a. 30 minutes
b. 10 minutes
c. 15 minutes
d. 5 minutes

47. Boiler quality plate not intended for hot forming can be supplied without normalizing or as rolled condition, if thickness of the plate is

a. ≤12 mm
b. >12 mm
c. Any thickness
d. <25 mm {Carbon<0.3%}

48. How many fusible plugs are required for a shell type boiler having wet back reversing chamber?

a. One
b. Two
c. Three
d. Not required

49. Which mechanical tests are required for Class III boiler?

a. One tensile, one all weld metal tensile test, two bend test, two impact test, one micro and one macro
b. One tensile, one bend test, one reverse bend test, one nick break test
c. One forward bend test, one reverse bend test
d. One forward bend test, one reverse bend test

50. As per IBR, recognition of competent authority, inspection authority, well known steel maker shall be valid for

a. Five years
b. Two years
c. Three years
d. Four years

Part-B **(5 X 20 = 100 Marks)**

(i) Answer all the **five** questions

Question No. 1 **(20 Marks)**

A 5 m long carbon steel header contains a single row of stubs at a pitch of 450 mm. The size of the header pipe is 141.3 OD x 6.55 mm nominal thickness with a maximum negative tolerance of 12.5% on the nominal thickness. The size of each stub is 63.5 mm OD x 4.5 mm thickness. Allowable stress of the header pipe material is 1200 kg/cm^2.

Calculate the maximum allowable working pressure of the header in kg/cm^2 as per Indian Boiler Regulations, 1950.

Question No. 2 **(20 Marks)**

A carbon steel plate is used for the fabrication of shell of a wet back shell type boiler. The size of the shell is 2170 mm OD x 10 mm thickness. The minimum specified ultimate tensile strength of the plate at room temperature is 49 kg/mm^2 and its minimum specified yield strength at design temperature is 26 kg/mm^2. Assuming an efficiency factor of 1.00, calculate the maximum allowable working pressure of the shell in kg/cm^2 as per Indian Boiler Regulations, 1950.

Question No. 3 **(20 Marks)**

Design a boiler drum with following parameters:

Calculate the steam drum shell thickness and dished end thickness.

Maximum allowable pressure : 128 kg/cm^2 (g)

Saturation temperature : 329^{0}C

Drum is located outside flue gas path.

Temperature ^{0}C	Allowable stress kg/cm^2
325	1345.57
350	1304.79

Distance between nozzles : 960 mm

Diameter of nozzle : 168.3 mm

Thickness of nozzle : 19.20 mm

Shell material : SA 516 GR 70

Nozzle material : SA106 Gr.A

Dished end : SA 516 GR 70

Dished end shape : Hemispherical

Shape factor for dished end ; K : 0.78

Question No. 4 **(20 Marks)**

Calculate the total heating surface of boiler as per the following parameters:

Capacity of boiler : 250 TPH

Steam pressure at outlet of superheater : 110 kg/cm^2 (g)

Steam temperature at outlet of superheater : 540^{0}C

Description	Tube outside diameter, mm	Total lengths of tubes, m
Front wall	76.1	1853.97
Pass-I Rear wall	76.1	1410.65
Pass-II Rear wall	51	1308.3
Side wall (both)	76.1	4035.5
Hanger Tube	44.5	1350
Primary Superheater - I	38.1	7669
Primary Superheater - II	38.1	4440
Secondary Superheater	44.5	3090

Question No. 5 **(20 Marks)**

CFBC boiler with following specification :

Capacity of boiler : 450 TPH

Maximum working pressure : 181 kg/cm^2 (g)

Maximum steam temperature in Radiant Superheater : 550^{0}C

Radiant Superheater material : SA213T91

Tube outside diameter convective superheater : 38.1 mm

Temperature ^{0}C	Allowable stress kg/cm^2 - SA 213T91
550	1090.75
600	662.59
625	463.81

Tube material of convective superheater coils : SA213 T22

Tube outside diameter convective superheater coils : 44.5 mm

Maximum steam temperature in Radiant Superheater : 393^{0}C

Temperature ^{0}C	Allowable stress kg/cm^2 - SA 213T22
400	1162
425	1162
450	1162

1. Calculate the minimum thickness of the tube for Radiant Superheater coils
2. Calculate the minimum thickness of the tube for Convective Superheater coils

********** **End of the question Paper** **********

THIS PAGE IS INTENTIONALLY LEFT BLANK
DON'T WRITE ANY THING HERE

Regn. No._____ **Paper - 2**

Name : _____

(To be written by the candidate)

SIXTH EXAMINATION FOR RECOGNITION OF COMPETENT PERSONS FOR INSPECTION & CERTIFICATION OF BOILERS – 2nd FEBRUARY 2020

BOILER DESIGN, MANUFACTURING, MATERIALS, ERECTION, COMMISSIONING, OPERATION AND MAINTENANCE, INSPECTION & CERTIFICATION DURING MANUFACTURE OR OPERATIONS AND HIGH PRESSURE WELDING INSPECTION

Date : 02/02/2020 **Time : 14:00 - 17:00 Hrs.** **Max. Marks : 150**

GENERAL INSTRUCTIONS:

1. **This Question paper contains two parts - Part-A & B.**
2. **Part - A contains multiple choice questions. Please use OMR sheet to answer these questions.**
3. **Part - B contains descriptive questions. Please use answer paper to answer.**

Part-A **(50 X 1 = 50 marks)**

(i) Answer all the **50** questions

(ii) Each question carries **one** mark

(iii) Use OMR Sheets to answer

1. As per IBR the design metal temperature for P91 pipes shall not exceed

   a. 648°C b. 552°C

   c. 610°C d. 710°C

2. Which of the following is creep resistant steel?

   a. 1 1/4 Cr - 1/2 Mo steel b. 2 1/4 Cr - 1 Mo steel

   c. Both (a) & (b) d. None of the above

3. Which of the following material is selected for boiler components in service in the creep range?

   a. Cr - Ni Stainless steel b. Cr - Mo Alloy steel

   c. Both (a) & (b) d. None of the above

4. 9 Cr-1Mo-V steel is selected instead of 2 1/4 Cr - 1 Mo steel for main steam piping of a 250 MW boiler by the designer. Which of the following is true?

a. Thickness of the piping will be reduced

b. Thickness of the piping will be increased

c. Thickness of the piping will remain the same

d. Nothing can be said about change in the thickness of the piping

5. Stress Relieving Heat Treatment after welding of boiler components is performed under which of the following condition?

a. Above Upper Critical Temperature of the steel

b. Above Lower Critical Temperature of the steel

c. Below Upper Critical Temperature of the steel

d. Below Lower Critical Temperature of the steel

6. A boiler drum is fabricated out of two shells. Longitudinal seams of each shell are welded using Shielded Metal Arc Welding & Submerged Metal Arc Welding. Circumferential seam is welded with Flux Cored Arc Welding & Submerged Metal Arc Welding. Which of the following is mandated by Indian Boiler Regulations, 1950?

a. Two test plates for longitudinal seams & one test plate for circumferential seam

b. One test plate for longitudinal seam & one test plate for circumferential seam

c. Two test plates for longitudinal seams

d. One test plate for longitudinal seam

7. With regard to a dry back shell type boiler, which of the following is a pressure part?

a. Shell

b. Furnace

c. Both (a) & (b)

d. None of the above

8. The circular furnace of a dry back shell type boiler can be mechanically strengthened against implosion by providing

a. Stiffner rings

b. Corrugations

c. Bowling hoops

d. All of the above

9. The end plate of a wet back shell type boiler can be stayed by

a. Tubes
b. Rods
c. Gussets
d. All of the above

10. Horizontal tubes of a horizontal multi-tubular dry back shell type boiler carry

a. Water
b. Steam
c. Flue gas
d. None of the above

11. Steam test is conducted for a boiler to assess

a. Steaming capacity of the boiler
b. Steam relieving capacity of the safety valves of the boiler
c. Steam passing capacity of the main steam stop valve of the boiler
d. None of the above

12. During the operation of a bi-drum water tube boiler, which of the following is true?

a. Upper Drum contains steam
b. Lower Drum contains water
c. Upper Drum contains water
d. All of the above

13. Bed evaporator coil of a fluidized bed combustion boiler is designed with studs with a purpose of

a. Minimizing erosion of the coil
b. Improving heat transfer through the coil
c. Both (a) & (b)
d. None of the above

14. The dished end of steam drum of a bi-drum water tube boiler shall be of the following geometry:

a. Semi-Ellipsoidal
b. Partial-Spherical
c. Hemi-Spherical
d. Any one of the above

15. In which of the following cases, post weld heat treatment is required in arc welded butt joints of pipes?

a. Carbon Steel Pipe Thickness < 20 mm and carbon ≤ 0.25%

b. Carbon Steel Pipe Thickness < 9 mm and carbon ≤ 0.30%

c. P11 Pipe Thickness > 13 mm, OD > 127 mm

d. All of the above

16. How many transverse tensile test specimens are required for a 120 mm thickness drum shell test plate?

a. One

b. Two

c. Four

d. Any number of specimens that shall cover full thickness of weld joint

17. The waterside corrosion caused due to high alkaline water is known as

a. Hydrogen embrittlement

b. Caustic gauging

c. Pitting

d. Stress corrosion cracking

18. Fibroscopic inspection of headers is carried out as a preventive measure to avoid boiler tube failure due to

a. Long term overheating

b. Short term overheating

c. Thermal fatigue

d. Blockages

19. The factor responsible for the formation of bonded ash deposits on heating surface of boiler

a. Furnace temperature

b. Flue gas composition

c. Heating rate

d. All of the above

20. Mechanical rubbing of boiler tubes with adjacent circuits, or with adjacent pressure part components resulting in boiler tube failure during their relative motions is called

a. Fretting

b. Fatigue

c. Erosion

d. Stress rupture

21. Deposit quantity analysis from water wall tubes in high flux zone of furnace is required to be carried out

a. To ensure the need of alkali boiling out

b. To ensure the need of second stage passivation

c. To ensure the need of chemical cleaning

d. To ensure the need of wet/dry preservation

22. Inside Oxide scale Thickness measurement technique used for condition assessment studies for pressure part components is useful in avoiding boiler tube failure due to

a. Short term overheating

b. Long term overheating

c. Stress corrosion cracking

d. Hydrogen embrittlement

23. During cold start-up of boiler, the air vent is to be closed after

a. The boiler is cut-in on the line

b. Steam is formed and all the air is vented

c. The economizer drain is closed

d. All burners have been lit and firing normally

24. Over pressure during steam test in a safety valve means

a. Increase in pressure over the set pressure of the safety valve

b. Increase in pressure over the nozzle when safety valve is chattering

c. Pressure at which the safety valve lifts

d. None of the above

25. What are the different methods of controlling the temperature of superheated steam?

a. Combined radiant & convective super heater with attemperator

b. Tilting burners

c. Flue gas recirculation

d. All of the above

26. Steam line water hammer can best be prevented by

a. Keeping steam line drained and insulated

b. Replacing all 90^0 elbows with capped tees

c. Always opening steam valves rapidly

d. Keeping steam temperature below saturation point

27. Boiler preservation can be done using

a. Nitrogen gas b. Carbon Monoxide gas

c. Oxygen gas d. Natural gas

28. A system in which the boiler operates with FD and ID fans is called

a. Natural draft b. Forced draft

c. Induced draft d. Balanced draft

29. The presence of silica in the boiler water causes

a. Steam carryover b. Corrosion

c. Scale formation d. None of the above

30. Which of the following affects the combustion performance?

a. Time b. Temperature

c. Turbulence d. All of the above

31. Tube holes are to be drilled on the long seam of a boiler drum. The seam will be 100% radiographed prior to drilling. What ligament efficiency is to be considered in this case during design?

a. 80% b. 90%

c. 95% d. 100%

32. What is the minimum number of safety valves required for a boiler fitted with integral superheaters?

a. 1

b. 2

c. 3

d. Safety valve is not mandatory

33. What should be the minimum seat bore of a boiler safety valve?

a. 13 mm
b. 19 mm
c. 25 mm
d. 50 mm

34. What is the negative tolerance permitted on the wall thickness of an SA106 grade B pipe?

a. 1%
b. 10%
c. 12.5%
d. 22%

35. What effect does Viscosity have on the Penetrating Properties of a Penetrant used for LPI?

a. It has no effect
b. It influences the rate of penetration
c. It influences the brightness in penetrant
d. It produces variation in the dye concentration in visible dye penetrant

36. In MPI Non-relevant indications can be caused by

a. Over magnetization
b. Structural design of the article
c. Difference in permeability within the article
d. All of the above

37. The dB difference between a signal 25% FSH (Full Screen Height) to 100% FSH is

a. 6 dB
b. 8 dB
c. 12 dB
d. 14 dB

38. An acceptable radiograph is obtained under given exposure conditions with a tube current of 5 mA and an exposure time of 12 minutes. If other conditions are not changed, what exposure time would be required if the X-ray tube current could be raised to 10 mA?

a. 24 minutes
b. 12 minutes
c. 6 minutes
d. 3 minutes

39. What is the minimum soaking time required for stress relieving a P22 pipe weld of diameter 127 mm and thickness 10 mm as per IBR?

a. 25 minutes
b. 30 minutes
c. 60 minutes
d. 120 minutes

40. What is the minimum diameter of the welding electrodes permitted to be used in boilers?

a. 2.4 mm
b. 3.15 mm
c. 4 mm
d. No restriction on diameter

41. A boiler drum is made of SA 299 material of 100 mm thickness. What should be the mandrel diameter for carrying out bend test in the production test coupon in this case?

a. 100 mm
b. 200 mm
c. 300 mm
d. 400 mm

42. A T22 tube is welded with a T91 tube in a super heater coil. What is the post weld heat treatment temperature required for this joint?

a. 680 – 700°C
b. 730 – 750°C
c. 750 – 770°C
d. 780 – 800°C

43. How many additional tests are required before rejection in case of mechanical test failure during the testing of production test coupon?

a. Not Allowed
b. 1
c. 2
d. 3

44. Which of the following defect occur due to melting or burning away of base metal?

a. Under cut
b. Spatter
c. Cracking of weld metal
d. Cold cracking

45. Alignment tolerance of cylindrical joints of drum shell plate [to be longitudinally butt welded] for thickness over 51 mm is

a. Lesser of 1/8 t or 04 mm, where t is the thickness of shell plate
b. Lesser of 1/4 t or 06 mm
c. Lesser of 1/8 t or19 mm
d. Lesser of 1/16 t or 09 mm

46. In case of notched bar Impact test, the axis of the notch shall be

a. Parallel to the surface of plate

b. Perpendicular to the surface of plate

c. Parallel or perpendicular to the surface of plate

d. None of the above

47. Hydro test of fusion welded drums is done

a. Before PWHT

b. After PWHT

c. Not required

d. None of above

48. Boiler drum & other cylindrical components shall be hydro tested at the makers works

a. When internal diameter is greater than 400 mm

b. When internal diameter is greater than 600 mm

c. When internal diameter is greater than 450 mm

d. When internal diameter is greater than 500 mm

49. Are butt welds permitted within bends?

a. Not permitted

b. Permitted

c. Permitted with Radiography of butt joints

d. Permitted with hydro test of butt joints

50. Steel shall not contain more than 0.05% of the following for boiler application:

a. Sulphur

b. Phosphorus

c. Carbon

d. Sulphur & Phosphorus

Part-B **(5 X 20 = 100 Marks)**

(i) Answer only any **five** questions.

(ii) Each Question may have many sub-sections. Write the Question number and sub-section number clearly against each answer.

(iii) Total number of answered question should not exceed five. Only first five answered question will be evaluated and additional answered questions will not be evaluated. Choose wisely and answer only any five questions.

(iv) Each question carries **Twenty** marks

Question No. 1

a. What are the precautions to be taken during dry preservation of boiler? **(5 Marks)**

b. Explain three element feed water control? **(5 Marks)**

c. What procedure is adopted for the normal shutdown in case of pulverised fuel fired drum type boilers **(7 Marks)**

d. What is BMCR of a boiler? **(3 Marks)**

Question No. 2

a. What steps precede internal inspection of boilers? **(5 Marks)**

b. What is the purpose of tube deposit sampling? **(3 Marks)**

c. How to determine when a boiler requires chemical cleaning? **(3 Marks)**

d. What is the effect of dissolved oxygen in boiler? How to minimize dissolved oxygen? What is the target value of dissolved oxygen in feed water? **(6 Marks)**

e. What is outage corrosion? How does this corrosion arise? **(3 Marks)**

Question No. 3

a. How are boilers classified? Explain briefly any two types of boilers? **(10 Marks)**

b. What are the differences between superheater and reheater? Explain in detail with pressure and temperature parameters and the reason for installing re-heater in a thermal power plant. **(10 Marks)**

Question No. 4

a. Explain briefly the natural circulation and forced circulation boilers. **(10 Marks)**

b. Explain with the help of block diagram the water circuit and steam circuit of a natural circulation boiler. **(10 Marks)**

Question No. 5

a. Explain the conditions under which boiler needs immediate shutdown. **(5 Marks)**

b. What is blow down in the boiler? Explain the purpose, advantages and impact on water steam cycle. **(15 Marks)**

Question No. 6 **(20 Marks)**

Consider the following details of the shell,

a. Shell ID : 218.9 mm
b. Shell minimum thickness : 52.5 mm
c. Shell material : SA335P12
d. Shell design pressure : 292.8 kg/cm^2 (g)
e. Shell design temperature : 446^{0}C
f. Allowable stress : 1055.2 kg/cm^2
g. Nozzle OD : 168.3 mm
h. Nozzle thickness : 39.7 mm
i. Nozzle material : SA182F12CL2
j. Nozzle allowable stress : 1320.3 kg/cm^2

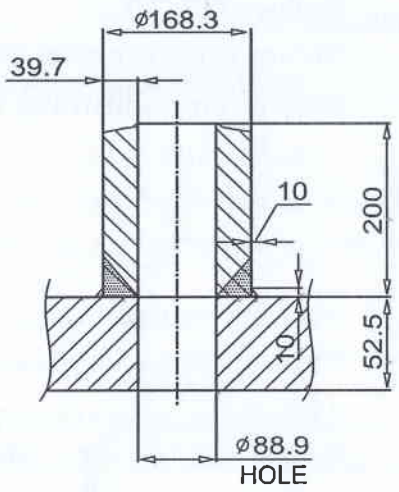

For the above configuration, confirm whether compensation is required and if compensation check is required, confirm whether the configuration satisfies the compensation requirements. (Assume ligament efficiency of shell as 100%)

Question No. 7

Answer the following,

a. For a convective superheater tube, the steam temperature is 431^{0}C. What is the working metal temperature for the tube? **(4 Marks)**

b. For a tube of OD 44.45 mm, the tube is bent with a mean radius of 100 mm. What is the permissible reduction in minimum calculated thickness permitted as per IBR? **(4 Marks)**

c. Explain how to arrive at permissible working stress for shells subjected to temperature below 454°C.

(4 Marks)

d. The following are the design parameters of a superheater tube; determine whether the tube satisfies the requirements of IBR? **(8 Marks)**

Tube OD	:	38.1 mm
Thickness	:	9.1 mm
Design pressure	:	292.8 kg/cm^2
Design temperature	:	460°C
Allowable stress @460°C	:	1042.1 kg/cm^2

Question No. 8 **(20 Marks)**

Boiler is having the following parameters:

Boiler capacity	:	170,000 kg/hr
Steam pressure at superheater outlet	:	108 Kg/cm^2 (g)
Steam temperature at superheater outlet	:	510°C

Boiler is provided with three safety valves on two steam drums and one number at outlet of superheater header.

Assume saturation temperature at Superheater safety valve set pressure	:	322°C
Assume valve constant, C	:	0.48
Steam side pressure drop across the superheater system	:	11.3 kg/cm^2
Steam drum safety valve no.1 orifice area	:	9.22 cm^2
Steam drum safety valve no. 2 orifice area	:	16.41 cm^2
Superheater safety valve orifice area	:	9.22 cm^2

1. What is the superheater safety valve set pressure, steam drum no. 1 safety valve pressure, steam drum no. 2 safety valve pressure?

2. Calculate the relieved capacity of superheater safety valve, steam drum no.1 safety valve, steam drum no. 2 valve?

3. Above three safety valves meeting the relieved capacity of boiler as per IBR?

Question No. 9 **(20 Marks)**

Shell type boiler of welded construction following specifications:

Maximum working pressure	:	12 kg/cm^2 (g)
Outside tube diameter	:	76.2 mm
Tube material	:	SA210 Gr.A1
Allowable stress value for tube material	:	785 kg/cm^2
Reversing chamber end plate material	:	SA516 Gr 70
Allowable stress value for end plate	:	1375 kg/cm^2
Diameter of largest circle taken between staying points	:	410 in mm

Plain end strength welded on the outside

1. Calculate the minimum tube thickness required under external pressure
2. Calculate the thickness for reversing chamber end plate

Question No. 10 **(20 Marks)**

Natural gas boilers fin tube integral economizer with following specifications:

Maximum working pressure	:	131.5 kg/cm^2 (g)
Maximum feed water outlet temperature	:	295^{0}C
Economizer coil outside tube diameter	:	51 mm
Mean radius of the bend to the center line of tube R	:	57 mm
Material specification (tube)	:	SA 210 GR A1

Temperature ^{0}C	Allowable stress kg/cm^2 - SA 210 GR A1
250	1202.85
300	1202.85
350	1192.66

1. Calculate the minimum thickness of economizer coil
2. Calculate the allowable thinning of bends

Question No. 11 **(20 Marks)**

Explain Radiographic techniques along with suitable sketches for radiographing plate, pipe, tube and shell weldments.

Question No. 12

a. Define requirements of SA335 grade 91, 50 mm thickness pipe to pipe butt weld joint with respect to **(10 Marks)**

   i. Preheating

   ii. Post weld heat treatment

b. What are the essential variables in procedure qualification of C Mn steels of 100 mm thickness SA299 by SAW? What are the tests to be conducted on the test coupon and acceptance criteria? **(10 Marks)**

Question No. 13

a. Briefly Explain what information the manufacturer must maintain in the quality-control record file. **(16 Marks)**

b. Explain the principle of liquid penetrant testing and magnetic particle testing? **(4 Marks)**

Question No. 14

Prepare a checklist with applicable IBR requirements for manufacturing superheated coil from SA 213 T22 tubes with respect to raw materials, manufacturing, inspection and certification. **(20 Marks)**

Question No. 15

What is SMAW, SAW, GTAW and GMAW? Explain each one with its advantages? **(16 Marks)**

What is the importance of low hydrogen electrode in arc welding? **(4 Marks)**

********** **End of the question Paper** **********

THIS PAGE IS INTENTIONALLY LEFT BLANK
DON'T WRITE ANY THING HERE

THIS PAGE IS INTENTIONALLY LEFT BLANK
DON'T WRITE ANY THING HERE