ASSAM BOILER OPERATION ENGINEER EXAMINATION-2023
PAPER-1(BOILER ENGINEERING-1)

Time: 3.00 Hours **Max. Marks: 50**

SECTION-A

Instructions to Candidates:

1. *Each question has four options, only one of which is correct.*
2. *Tick the correct answer.*
3. *Each right answer carries 1 mark.*
4. *Each wrong answer carries a penalty of –(minus)0.75 mark.*
5. *No marks will be awarded or deducted for unattended questions.*

Answer the questions & choose the right answer: **[1x24=24]**

1. When 23,330 lb of water is lowered from 212°F to 196°F, ____ Btu are given up.

a) 37,3,280	b) 45,72,680	c) 49,45,960	d) 95,18,640

2. The maximum voltage for an electric boiler is ____ V.

a) 480	b) 4160	c) 13,800	d) 16,000

3. Cast iron boilers are used for ____ heating systems only.

a) Open, high-pressure	b) Closed, high-pressure
c) Open, low-pressure	d) Closed, low-pressure

____ in the boiler keeps the boiler metal from being destroyed by the intense furnace heat.

a) Forced air	b) Circulating water	c) Circulating steam	d) All of the above

4. The original Stirling boiler is a water tube boiler with ____ steam and water drum(s) on the top and a mud drum beneath.

a) One	b) Two	c) Three	d) Four

5. A temperature of 72°F equals ____ °C.

a) 22.22	b) 40	c) 72	d) 104

6. The statement ____ is not true.

a) Burning fuel creates energy	a) Energy can be moved
b) There are several forms of energy	c) Energy cannot be created or destroyed

7. A 55-gal drum contains ____ lb of water when full.

a) 27	b) 458	c) 1544	d) 1897

8. A column of water 160 ft high exerts a pressure at the bottom of ____ psig.

a) 69.28	b) 78.56	c) 160	d) 369.5

9. A hydraulic tester applies a force of 52,000 lb that causes a test sample with an original cross-sectional area of 0.90 sq in. to fail. The tensile strength of the sample is ____ psi.

a) 46,800	b) 51,999.1	c) 52,000.9	d) 57.778

10. A hydraulic tester applies a force of 52,000 lb that causes a test sample with an original cross-sectional area of 0.90 sq in. to fail. The tensile strength of the sample is ____ psi.

a) 46,800	b) 51,999.1	c) 52,000.9	d) 57.778

____ administers the application of various approval stamps on boilers, pressure vessels, and safety valves.

a) ASME International	b) The NB
c) The Boiler Inspector	d) None of the above

____ is the most common form of NDT (non-destructive testing) in pressure vessel work.

a) X-Raying	b) Magnetic particle testing
c) Dye penetrate testing	d) Eddy Current testing

11. The maximum capacity of a boiler is the

a) Area of the floor it occupies
b) Volume of water its shell will hold
c) Pounds of steam it will produce in 1 hr at a given pressure and temperature

d) Gallons of water required to produce a given amount of steam at a given pressure and temp

12. ____ is the standard welding method for boiler repair.

a) GTAW	b) SAW	c) SMAW	d) None of the above

13. ____ is the ability of a material to return its original shape after being deformed.

a) Ductility	b) Resiliency	c) Malleability	d) None of the above

14. Tube ends are normally ____ in a fire tube boiler and ____ in a water tube boiler.

a) Beaded, beaded	b) Beaded, flared	c) Flared, flared	d) Flared, beaded

15. A constant steam pressure should be maintained on the boilers to ensure that ____.

a) Steam consumption is minimized	b) The steam does not become superheated
c) Expansion of the piping is maximized	d) The steam temp & volume remain constant

16. Water hammer first damages a steam line at ____ in the piping.

a) Elbows	b) Tees
c) Restrictions	d) All of the mentioned

17. A hydrostatic test uses ____ pressure to check for leaks.

a) Air	b) Water	c) Steam	d) None of the above

18. Steam pressure gauges should be accurate to with in ____ % of the working pressure.

a) 2	b) 5	c) 6	d) 10

____ is the erosion that occurs as steam or another high-velocity fluid streaks through a small opening.

a) Throttling	b) Blow-down	c) Steam tracing	d) Wire drawing

19. A safety valve that is marked with the letters "UV" inside the ASME symbol stamp is suitable for use only on ____.

a) Hot water boilers	b) Steam boilers
c) Natural gas or fuel-oil fired boilers	d) Unfired pressure vessels

20. Condensate receivers are often vented to the atmosphere in order to ____.

a) Prevent over pressurization of the receiver	b) Prevent condensate spills
c) Promote energy efficiency	d) All of the above

21. ____ is a benefit from the use of pressure reducing valves.

a) Smaller steam distribution piping
b) More precise temperature control
c) Lower pressure ratings for steam-using equipment
d) All of the above

SECTION-B

Answer the following questions in the space provided.
The marks for each question are indicated in brackets.

Q.1: Answer any THREE questions. **[2x3=6]**

(a): What is water hammer? here does water hammer damage a steam line first?
(b): What is the volume of a tank that is 18" in diameter and 48" long?
(c): How is a boiler tested for leaks after construction is complete or after repairs?
(d): Why do nearly all tube leaks in a fire tube boiler occur around the tube ends?
(e): What are the functions of studded water walls?

Q.2: Draw a neat diagram for any TWO of the given options. **[5x2=10]**

(a): Straight-tube water tube boilers have straight, inclined tubes to aid in water circulation.
(b): Flow diagram of TPP (Air, Flue gas, water and steam circuit).
(c): Positive suction pump.
(d): Vent condenser.

Q.3: How is the rate of combustion expressed for solid fuels burned on grates? Explain with a numerical example. [5]

Q.4: What is the difference between vibrating grate stoker and retort stoker? [3]

Q.5: Fuel oil-fired boiler's steam rate averages 114lb of steam/gal. of fuel oil. The boiler operates 24hr/day, 350 days/yr. The fuel oil costs ₹1.75/gal. and the load is 50 Klb/hr. What is the annual fuel cost? [2]

ASSAM BOILER OPERATION ENGINEER EXAMINATION-2023
PAPER-2(BOILER ENGINEERING-2)

Time: 3.00 Hours **Max. Marks: 50**

SECTION-A

Instructions to Candidates:

1. Each question has four options, only one of which is correct.
2. Tick the correct answer.
3. Each right answer carries 1 mark.
4. Each wrong answer carries a penalty of –(minus)0.75 mark.
5. No marks will be awarded or deducted for unattended questions.

Answer the questions & choose the right answer: **[1x24=24]**

1. The pressure at the outlet of the super-heater is the pressure in the steam and water drum of the boiler during normal operation.

a) Substantially higher than	b) Slightly higher than
c) The same as	d) Slightly lower than

2. ____ is the solid, hard mass formed when coal or another solid fuel burns under poor furnace conditions.

a) Pyrite	b) Lignite	c) Clinker	d) Slack

3. ____ is the hardness of coal.

a) Grade	b) Rank	c) Slag	d) Fly Ash

4. Grades of fuel oil are designated by number, from No. ____ through No. ----

a) 1:4	b) 1:6	c) 2:4	d) 2:6

5. Four types of automatic flame sensors used for firing boilers are ____.

a) Infrared, ultraviolet, LED and flame rod	b) Infrared. Photocell, LED and flame rod
c) Infrared, ultraviolet, photocell & flame rod	d) Infrared, photocell, LED and ultraviolet

6. Excessive thermal cycling should be avoided because

a) It can lead to leaks at tube ends due to excessive expansion and contraction
b) It lead to spalling of the refractory
c) It can lead to metal fatigue in the boiler
d) All of the above

7. The electric control signal for a damper actuator is typically ____.

a) 2mA-10mA	b) 4mA-10mA	c) 4mA-20mA	d) None of the above

8. When ____ is applied to one side of the tube of a manometer, the water will rise in the other side of the tube.

a) Pressure	b) Vacuum	c) Mercury	d) None of the above

9. A ____ is a master controller that calculates and distributes the steam production requirements to two or more boilers in order to maintain a constant steam header pressure.

a) Plant master	b) Programmable controller
c) Boiler master	d) Cascading control

10. A process condition that must be met before a certain action may be taken is known as ----.

a) Interlock	b) Process variable
c) Permissive	d) Final control element

11. The low water cutoff switch should be tested ____ by blowing down the float chambers while the burner is firing.

a) Hourly	b) Daily	c) Weekly	d) Monthly

12. It is important to inspect the alignment of soot blowers during a maintenance shutdown to

a)	ensure that the soot blowers will not be damaged by excessive vibration.
b)	confirm that the soot blowers are blowing directly on the tube surfaces for maximum efficiency.
c)	verify that the soot blowers will not cause erosion of the tubes by blowing directly on the tube surfaces.
d)	ensure that the soot blowers will not be damaged by the furnace heat.

13. Leaks of water or condensate into the insulation on the outside of a boiler should be stopped as quickly as possible because

a)	the constant wetness of the insulation reduces boiler efficiency.
b)	steam vapor from the wet insulation can obscure vision in the boiler room.
c)	the constant wetness of the insulation can cause severe corrosion on the outside of the boiler.
d)	the water running out the bottom of the insulation jacket creates an unsightly housekeeping problem.

14. When starting a package boiler and placing it on-line with other boilers already in service, the boiler should remain on low fire until the flue gas outlet temperature reaches at least _____ °F.

a) 100	b) 200	c) 300	d) None of the above

15. Filter baghouses are normally bypassed during the startup of a coal-fired boiler in order to

a)	conserve energy until the filter baghouse is needed
b)	avoid damage to the bags due to excessive temperature
c)	avoid unnecessary restriction to the flue gas flow during startup
d)	keep the oily nature of the coal smoke during startup from blinding the bags

16. Scorched paint on the outside of the boiler furnace casing usually indicates

a)	damaged refractory materials inside the casing
b)	standard trade paint was used instead of the correct high temperature paint
c)	acid dewpoint corrosion is occurring on the other side of the casing metal
d)	the furnace refractory has been subjected to thermal cycling

17. The waste of steam results in short-term or long-term costs due to

a)	Increased equipment maintenance costs
b)	Reduced life of the steam system equipment
c)	Increased costs associated with environmental emissions
d)	All of the above

18. Frequent purging of a boiler furnace is undesirable because

a)	It causes excessive stresses on the boiler metal due to expansion and contraction
b)	Extra heat is lost up the stack during the purge period
c)	It is an indication that the boiler capacity is too great for the load
d)	All of the above

19. The proper amount of bottom blow-down to be used is

a)	two minutes per shift
b)	three times per shift for 10 sec at each use
c)	only as needed to remove the actual amount of sludge that accumulates in the boiler
d)	only as needed to remove impurities that lead to high surface tension

20. A steam trap with a 1/4" orifice is blowing through continually into a condensate return system. The steam pressure supplied to the steam trap is 125 psig and the backpressure at the trap is 10 psig. The failed steam trap wastes _____ lb/hr of steam.

a) 0.8	b) 290	c) 461	d) 1478

21. ____ is prevented by turning calcium- and magnesium-containing compounds into a non-adhering sludge.

a) Carryover	b) Scale	c) Pitting	d) Acidic Corrosion

22. If the water level is at the lowest visible point in the gauge glass of a fire tube boiler, the water level in the boiler is at least

a) 2" above the lowest permissible water level
b) 3" above the NOWL
c) 3" above the highest point of the tubes, flues, or crown sheets
d) 3" below the boiler's highest heating surface

23. Silica gel is commonly used to prevent

a) carbonic acid attack of condensate returns piping
b) silica carryover from steam boilers to steam turbines
c) foaming of the boiler water
d) moisture in the boiler from causing corrosion during dry layup

24. ____ is the plasticity exhibited by a material under tension loading.

a) Compressive strength	b) Tensile strength
c) Malleability	d) Ductility

SECTION-B

Answer the following questions in the space provided.
The marks for each question are indicated in brackets.

Q.1: Answer any THREE questions. [2x3=6]

(a): Why should combustion safety devices such as low gas pressure switches or low fuel oil temperature switches require the boiler operator to manually reset the device if it causes the burner to shut down?

(b): A chain-grate stoker is 14' wide and is traveling 2.5" per minute. The coal is fed onto the grates in a layer 5" thick. The coal weighs 48 lb/cu ft. At what rate is the coal being consumed, in ton/hr?

(c): What does black smoke from the stack of a gas-fired boiler indicate?

(d): What procedure should be followed when replacing a broken tubular gauge glass?

(e): What is a flue gas scrubber?

Q.2: Answer any TWO of the following questions. [5x2=10]

(a): A bimetallic strip is made of two metals with equal area of cross-section. Due to temperature change, the stress developed in one strip is -40 N/mm^2. What is the stress developed in another component of the composite bar?

(b): A reversible cycle receives 40 kJ of heat from one heat source at a temperature of 127 °C and 37 kJ from another heat source at 97 °c. At 47 °C what is the heat rejected in (kJ) to the heat sink?

(c): There is an oil-fired boiler that operates for 8000 hrs/year and generating 40 T/hr steam. The TDS in boiler feed water was reduced from 600 ppm to 300 ppm. The max. permissible limit of TDS in the boiler is 3000 ppm and make up water is 10%. Temperature of the blow down water is 170°C and boiler feed water temperature is 40°C. GCV of fuel is 10000 kcal/kg and efficiency of the boiler is 72.50%. Calculate the savings in fuel oil per annum due to reduction in the blow down.

Q.3: An AFBC boiler has following specifications:

1. Boiler capacity: 70 TPH	2. Boiler pressure: 60 kg/cm^2
3. Steam temperature: 500°C	4. Fuel fired: Coal with 35% ash content
5. GCV of coal: 4100 kcal/kg	6. Theoretical air for combustion: 5.6kg/kg of coal

7. Hydrogen in fuel: 4%	8. Specific heat of flue gas: 0.24 kcal/kg°C
9. Specific heat of superheated water vapor in the flue gas: 0.45 kcal/kg ^{o}C	

The operating parameters are given below:

Flue gas exhaust temperature: 160°C	Excess air: 30%
Feed water temperature: 105 ^{o}C	Radiation and other losses: 8%
Ambient temperature: 30 ^{o}C	

(i) Calculate the Boiler Efficiency using indirect method on GCV basis. [5]

(ii) If the feed water temperature is 110°C and the steam is produced at 60 kg/ cm^2 and 500°C, what is the hourly coal consumption? Total heat of steam at 60 kg/ cm^2 and 500°C is 817kcal/kg. [5]

ASSAM BOILER OPERATION ENGINEER EXAMINATION-2023
PAPER-3(BOILER ENGINEERING DRAWING)

Time: 3.00 Hours **Max. Marks: 50**

SECTION-A

Instructions to Candidates:

1. *Each question has four options, only one of which is correct.*
2. *Tick the correct answer.*
3. *Each right answer carries 1 mark.*
4. *Each wrong answer carries a penalty of –(minus)0.75 mark.*
5. *No marks will be awarded or deducted for unattended questions.*

Answer the questions & choose the right answer: **[1x24=24]**

1: A drum with a 24" OD has a circumference of ……..

a) 12	b) 27.14	c) 75.36	d) 576

2: Condensate return piping is commonly pitched approximately .....per 10'-0'.

a) 1/16"	b) 1/8" to ¼"	c) 1/8" to ½"	d) ¼" to 1"

3: Copper and brass piping may be used for piping systems as long as the temperature does not exceed..... *F.

a) 212	b) 250	c) 406	d) 500

4: If a boiler has multiple safety valve, the valve set to lift at the highest pressure must not lift at greater than.....% above the MAWP.

a) 3	b) 6	c) 10	d) 20

5: A boiler vent is located on the ..... of the boiler.

a) Side	b) Bottom	c) End	d) Top

6: The temperature control valve uses a temperature-sensing device connected to the valve actuator by a .....tube.

a) Capillary	b) Equalizing	c) Bourdon	d) Siphon

7: What is the largest number of Indian Standard for Drawing?

a) SP 46	b) IS 696	c) ISO 235	d) ISD 011

8: Which type of drawing gives a details about size tolerance, heat treatment?

a) Assembly drawing	b) Production drawing
c) Machine drawing	d) Exploded drawing

9: Symbol φ before a dimension value means

a) Radius	b) Taper	c) Diameter	d) Spherical diameter

10: Pattern to be used for sectioning of Cast Iron is

a) ANSI 31	b) ANSI 32	c) ANSI 33	d) ANSI 34

11: Triangles are used for……

a) Hatching lines	b) Drawing trinagles
c) Drawing lines 30,45,60,90 degree	d) Drawing inclined lines at any angle

12: Pencils used for engineering drawing work are

a) 3H to 6H	b) HB to 2H	c) 2B to HB	d) 4B to 6B

13: A T-square is used for drawing

a) Horizontal lines	b) Vertical lines	c) Inclined lines	d) Lines at any angle

14: A knuckle tread comprises

a) Round crest and round root of equal radius
b) Round crest and round root of unequal radius
c) Flat crest and round root
d) Round crest and flat root

15: The gap between two adjacent objects in a rectangular array

a) Has to be more than the size of the object
b) Can be less or more than the size of the object
c) Should be at least 1.5 times the object
d) Depends upon many parameters.

16: A screw has its top head that is generally

a) Circular	b) Square	c) Hexagonal	d) Octagonal

17: A special nut for locking with six tongues is called as

a) Philidas nut	b) Oddie nut	c) Simmonds nut	d) Wiles nut

18: A washer is used to

a) Prevent loosening of bolt	b) Protect bottom surface
c) Protect bottom surface and distribute stresses	d) Easily tighten the nut

19: A turn buckle has

a) Thread only on one side
b) Right hand threads on both sides
c) Long threads on one side
d) Left hand side thread on one side and right hand on other side.

20: Edge preparation in a welded joint is to

a) Avoid sharp edges	b) Increase strength of weld
c) Reduce heat required	d) Have uniform stress

21: Centre to centre spacing of intermittent weld is indicated by a number

a) Within parentheses	b) After a hyphen
c) After a cross	d) After a vertical line

22: Type of key used for heavy power transmission is

a) Saddle key	b) Sunk key	c) Screw	d) Concave key

23: A gib is used with cotter to

a) Avoid shearing of cotter	b) Give more strength to cotter
c) Reduce slipping of cotter	d) Allow more taper on cotter

24: A constant velocity joint is used where

a) Driver shaft speed should be constant
b) Speed of neither driver nor of driven shaft is constant
c) Driven shaft speed should be constant
d) Driven shaft speed is same as driver shaft speed

SECTION-B

Answer the following questions in the space provided.
The marks for each question are indicated in brackets.

Q.1: Answer any THREE questions. **[2x3=6]**

(a): What are the various types of muff couplings? Explain their construction by sketches.
(b): Name the various pipe materials and their application.
(c): Differentiate between basic size and actual size.
(d): Which type of fits is used for a journal bearing and why? Explain.
(e): What is meant by datum? What terms are used related to it?

Q.2: Answer any TWO of the following questions. **[5x2=10]**

(a) : A hole of 45mm is dimensioned for maximum and minimum diameters as 45.025 and 45.000m respectively. Maximum and minimum shaft diameter is 44.991 and 44.975. Find: basis of fit system, tolerance grade on hole, tolerance grade on shaft and type of fit. DATA VALUE HAS TO BE TAKEN FORM TOLERANCE AND CLEARANCE TABLE.

(b) : A horizontal MS plate of thickness 20mm is to be bolted on a cast iron block using M20 stud bolt, washer and a nut. Prepare the sectional view of the assembly and show all standard proportions in the drawing.

(c) : Draw the front, top and right-side views of an adjustable rod support shown in below figure. Use third angle projection method. (Free hand sketch acceptable)

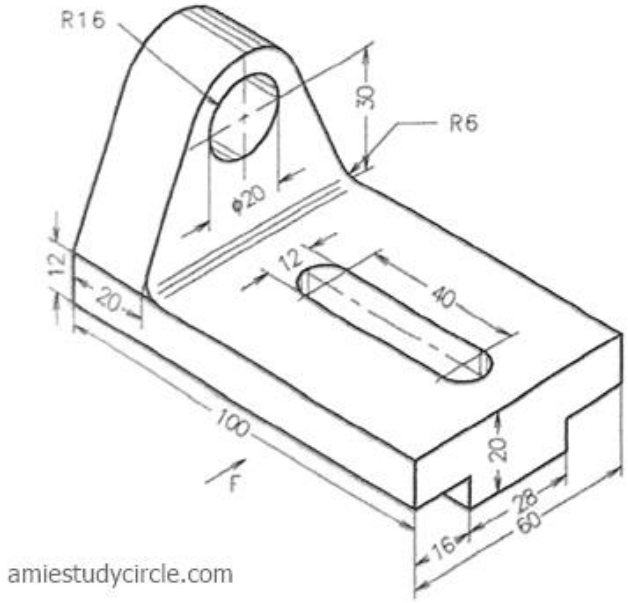

Q.3(a): The below figure shows an orthographic projection of a machine part. Draw the isometric view. **[5]**

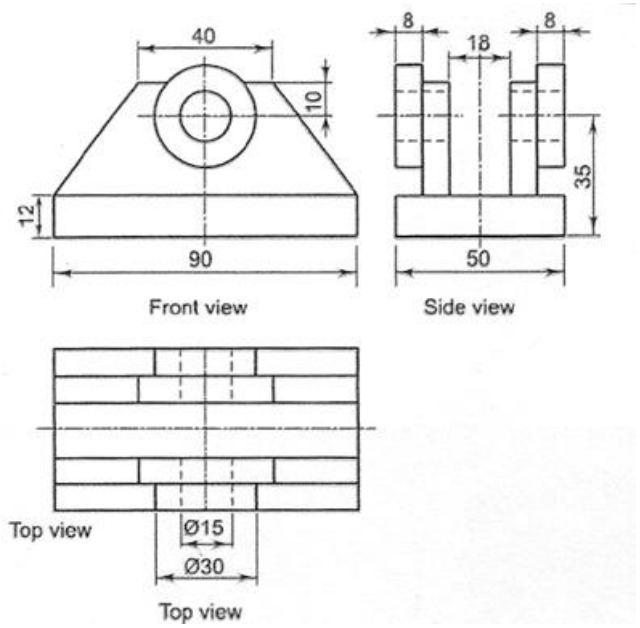

Q.3(b): An object is given below shown in isometric view. Draw their perspective views with two vanishing points. **[5]**

