Study Material For Boiler Operation Engineer (BOE) Exams

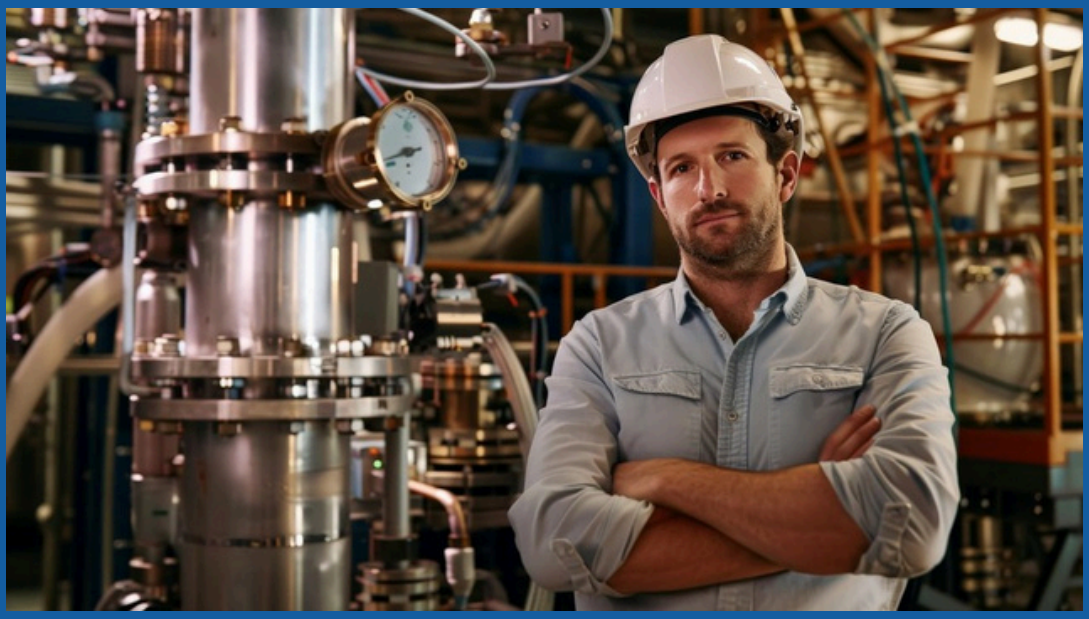

Theory, Numerical Problems, MCQs and Boiler Drawing Problems from BOE Exams

Amazon Flipkart Pothi

PROENGR.IN

SUDESH K JAIN

ASSAM BOILER OPERATION ENGINEER EXAMINATION-2022
PAPER-1 (BOILER ENGINEERING-1)

Time: 3.00 Hours **Max. Marks: 100**

(Use of Steam Tables, Mollier Chart and Scientific Calculator are permitted)

Answer all the questions as per given directions. (Marks are indicated at right)

Section I

Choose the appropriate answer out of the four options. **[1x52]**

1. Rankine cycle efficiency of a good steam power plant may be in the range of

a) 15 – 20 percent b) 35 – 45 percent

c) 70 – 80 percent d) 90 – 95 percent

2. Which statement is true for the use of boiler after accident resulting in any death?

a) The boiler shall not be put to use till the inquiry is completed.

b) After completion of inquiry, the zone inspector of the concerned state shall decide whether the use of boiler can be permitted or not.

c) Use of boiler can be permitted at lower pressure without repairs or pending the completion of any repairs or alterations.

d) Chief inspector of boiler will permit according to the condition and situation of boiler after thorough inspection.

3. The overall efficiency of thermal power plant is equal to

a) Rankine cycle efficiency

b) Carnot cycle efficiency

c) Regenerative cycle efficiency

d) Boiler efficiency × turbine efficiency × generator efficiency

4. Arrange the following liquid fuels in the ascending order based on density:

(i) Gasoline (ii) Kerosene (iii) Diesel (iv) Heavy oil

a) 1, 2, 3, 4 b) 4, 3, 2, 1

c) 1, 3, 2, 4 d) 2, 3, 4, 1

5. Lewis Thomson calorimeter is used to determine the CV of

a) Solid fuels b) Liquid fuels

c) Gaseous fuels d) None of the these

6. In the presence of oxygen, heat is liberated by

a) Potassium chlorate b) Potassium nitrate

c) Both of them d) None of these

7. In Orsat Gas Analysis, cuprous chloride solution is used for absorbing

a) O_2gas b) CO_2 gas c) CO gas d) H_2 gas

8. Blowing down of boiler water is the process of

a) reducing the boiler pressure

b) increasing the steam temperature

c) controlling the solid concentration in the boiler water by removing some of the concentrated saline water

d) None of the above

9. Consider the following statements:

(1) Boilers rated over 500 MW are not necessarily super-critical boilers.

(2) Power plant boilers are generally once-through boilers.
(3) Blow down at regular intervals done to remove solids
Of these statements,
a) 1, 2 and 3 are correct b) 1 and 2 are correct
c) 2 and 3 are correct d) 1 and 3 are correct

10. Under normal operating conditions, a drop in the steam temperature leaving an uncontrolled interdeck superheater could be caused by
a) decrease in steam velocity through the superheater
b) drop in the feed water temperature
c) badly fouled economizer
d) decrease in combustion gas velocity through the superheater

11. Combustion temperature in FBC boilers is
a) 1200 ^{o}C b) 900 ^{o}C c) 1400 ^{o}C d) 1800 ^{o}C

12. In AFBC boilers, coal size used is
a) 1–10 mm b) 10–15 mm c) 5 cm d) 3 cm

13. The limestone or dolomite used in FBC plant removes
a) SO_x b) NO_x c) ash d) sulphur

14. Carry-over loss in a steam turbine is due to
a) kinetic energy b) potential energy c) heat energy d) datum energy

15. The cooling section in the surface condenser
a) increases the quantity of vapour extracted along with air
b) reduces the quantity of vapour extracted along with air
c) does not affect vapour quantity extracted but reduces pump capacity of air extraction pump
d) all of the above

16. Mechanical efficiency of a gas turbine as compared to internal combustion reciprocating engine is
a) same b) lower
c) higher d) none of these

17. As per the government of India, regulations limitation of particulate material in thermal power plants more than 210 MW generating capacity is
a) 350 mg/normal m^3 b) 150 mg/normal m^3
c) 250 mg/normal m^3 d) 100 mg/normal m^3

18. A single-element feedwater control system uses
a) only drum level as control parameter
b) only steam flow rate as control parameter
c) both steam flow rate and drum level as control parameters
d) temperature as control parameter

19. If the load factor on the power station is higher
a) Cost/unit power is less b) Cost/unit power is more
c) Has no bearing on cost d) None of the above

20. Which of the following causes the least pollution when burnt?
a) Petrol b) Diesel c) Coal d) Natural gas

21. For boiler pressure of 20 kg/cm2, pressure gauge ideal range should be

a) 0 - 80 kg/cm^2 b) 0 - 40 kg/cm^{2}c) 0 - 60 kg/cm^2 d) 0 - 20 kg/cm^2

22.Boiler manufacture shall maintain record pertaining to all boiler certificates and approved drawings for the period of

a)One year b) Two-year c) Five-year d) Ten year

23.RLA stands for

a)Remnant Life Audit b) Reserve Life Audit

c) Remnant Life Assessment d) Repairing Life Audit

24.For shell type boiler max permitted working pressure is reduced by 5% when it attains age of

a)20 years b) 25 years c) 50 years d) 15 years

25.If electric light is used inside a boiler shell or drum voltage shall not exceed

a)220 volts b) 110 volts c) 24 volts d) 60 volts

26.Maximum outlet water temperature of the economizer of high-pressure boiler shall be at least

a) 400 F below the superheated steam temp

b) 250 F below the superheated steam temp

c) 250 F below the saturated steam temp in the boiler drum

d) 400 F below the saturated steam temp in the boiler drum

27.Boilers constructed to class I requirement shall be stress relieved by heat treatment when

a) Any plate is 18 mm thick

b) Carbon content of the steel is 0.20%

c) Alloy steel material is used in boiler construction

d) Any plate is 16 mm thick

28.Manholes of oval type shall be arranged such that

a) Major axis to be parallel with longitudinal centre line of boiler

b) Minor axis to be parallel with longitudinal centre line of boiler

c) Centre of manhole is offset to the longitudinal centre line of boiler

d) Can be arranged any way

29. As per Assam Boiler rules, 1974, in which case inspector should decline to proceed for inspection and report the facts to chief inspector?

a) Proper disconnection or isolation of boiler made

b) Boiler is unreasonably hot or not properly cleaned and scaled

c) Boiler registration number is engraved

d) Boiler oversees qualified engineer or attendant as required by rules

30.When a boiler is transferred from another state into the state of Assam

a)Boiler can be used after receiving at site

b) Boiler can be used after receiving memorandum of inspection book

c) Boiler can be used after registration has been affected by chief inspector of boilers

d) No need to inform chief inspector

31. At the time of renewal of Boiler certificate

a) Boiler must be examined internally only

b) Boiler must be examined externally only

c) Boiler must be examined externally as well as internally

d) Boiler to be steam tested

32. Provisional order of the boiler is to be issued after,

a) Satisfactory completion of steam test

b) Satisfactory completion of hydraulic test in every case of registration

c)In every case after repairing of Boiler

d)In every case of Boiler transfer from other state into the state of Assam

33. Drain pockets are provided in a steam line for

a)Effective removal of steam b) Removal of dirt

c) Checking of steam line d) Effective removal of line condensate

34. The purpose of atomization in an oil-fired burner is to

a) Increase excess air

b) Increase the surface area of oil

c) Reduce power consumption

d) Reduce the flue gas temperature

35. The difference in temperature between steam and condensate is the principle of operation in a

a)Thermodynamic trap b) Thermostatic trap

c) Orifice type trap d) Temperature trap

36. If the pressure of saturated steam is reduced through a pressure reducing valve

a)It will get superheated b) Enthalpy will reduce

c) It will produce wet steam d) Enthalpy of evaporation will reduce

37. Feed check valves is used to

a) Regulate flow to boiler

b) Check the level of water in boiler

c)Recirculate feed water

d)Allow high pressure feed water to boiler and not allow reverse flow

38. The best steam for indirect heating in most industrial process is

a)As dry as possible b) Super-heated steam

c) Wet steam d) As wet as possible

39. The range of graduation on pressure gauge for working pressure up to and including 35 kg/cm^2 shall be

a)Zero to 1.25 times the working pressure b) Zero to 1.50 times the working pressure

c) Zero to 2.0 times the working pressure d) Zero to 2.5 times the working pressure

40. Which of the following parameter remain constant during ideal throttling process?

a)Pressure b) Enthalpy c) Entropy d) Temperature

41. Fish mouth opening is a term used to describe

a)PA fan impeller cracks b) Boiler tube failure

c) Mill gear cracks d) Turbine blade failure

42. Reheating of steam is used

a)To increase efficiency b) To increase work output

c) To cool turbine blades d) To reduce pollution

43. The type of firing used for a Pulverized coal fired boiler is

a)Over firing b) Tangential Firing

c) Vertical Firing d) None of the above

44. Water treatment for steam boiler is generally required

a)To remove hydrogen b) To prevent scale formation
c) To improve combustion efficiency d) To reduce stack temperature

45. **Which of the following benefit is not achieved by maximizing condensate recovery?**

a)Maximization of boiler output b) Reduction in water treatment cost
c) Reduction in energy input cost d) Minimization of flue gas exit temperature

46. **In regenerative cycle feed water is heated by**

a)Flue Gas b) Bleed steam from turbine
c) Auxiliary Heaters d) All of the above

47. **The ideal range of pH value for boiler feed water is**

a) 3.5 - 5 b) 5.5 – 6 c) 7 - 7.5 d) 8.5 - 9.5

48. **A device which is used to drain off water from steam pipes without escape of steam is called**

a)Steam separator b) Steam trap
c) Pressure reducing valve d) Injector

49. **Boiler parameters are expressed by**

a)Tonnes/hr of steam b) Pressure of steam in kg/cm^2
c) Temperature of steam in °C d) All of the mentioned

50. **Hydrated lime is used primarily to reduce which type of hardness in boiler feed water?**

a)Hardness due to calcium sulphate b) Bicarbonate hardness
c) Hardness due to calcium chloride d) All of the mentioned

51.Which type of heat loss cannot be controlled by boiler design

a)Loss of heat due to combustion of hydrogen
b) Loss of heat due to dry flue gas
c) Loss of heat due to radiation
d) All the above

52. Which of the following boiler accessories does not need flue gas for its operation?

a)Economizer b) Preheater c) Injector d) Super heater

SECTION-II (SUBJECTIVE)

1. **Answer the following questions.** **(2x5=10)**

a) List down the merits and demerits of liquid fuels over solid fuels.
b) Define calorific value of a fuel.
c) What is meant by ‘overfeed’ and ‘underfeed’ principles of firing coal?
d) What are the advantages of burning the fuels in pulverized terms (at least four)?
e) What are the benefits a CFBC boiler offers?

2. **Answer any four questions.** **(5x4=20)**

a) Explain briefly the methods used to control SO_x and NO_x in FBC boilers.
b) Describe various types of high-pressure boilers used in practice.
c) Differentiate between the following:

(i) Interdeck and overdeck arrangement	(ii) Radiant and convective superheater

d) With a neat sketch, explain any one of the following:

(i) Regenerative air heater	(ii) Recuperative air heater
(iii) Superheater	(iv) Economizer

e) Explain the meaning of boiler mountings and accessories. What is the need to have them in a power plant?

f) Explain the working of a Benson boiler with a neat sketch.

SECTION-III (NUMERICAL)

1. Answer all questions.

a) A sample of fuel has the following composition: H = 9%, S = 2%, C = 83%, O = 4% and ash = 2%. For an air–fuel ratio of 12:1, calculate the following:

(i) Mixture strength as a percentage rich or weak **(4)**

(ii) Volumetric analysis of the dry products of combustion **(4)**

(OR)

A fuel $C_{10}H_{22}$ is burnt using an air fuel ratio of 12:1 by mass. Air contains 77 per cent of nitrogen and 23 per cent of oxygen by mass. If the whole amount of hydrogen burns to form water, vapour and there is neither any free oxygen nor any free carbon, determine the complete volumetric analysis of the products of combustion. **(8)**

b) The following results were obtained when a sample of gas was tested:

Gas burnt in the calorimeter = 0.07 m^3

Pressure of gas supply = 5 cm of water

Temperature of gas = 12 °C

Temperature of water at inlet = 10 °C

Temperature of water at outlet = 24 °C

Steam condensed = 0.09 kg

Weight of water heated by gas = 27 kg

Barometer pressure = 75 cm of Hg

Determine the higher and LCV of fuel per cubic metre of gas at a temperature of 14 °Cand barometric pressure of 76 cm of Hg. **(5)**

c) A stepped shaft made of steel is fixed at one end and 1.5 kNm torque is applied at another end. What additional torque that can be applied at point B if the maximum shear stress is not to be exceeded 105 MPa and the total angle of twist should not exceed 3°. The modulus of elasticity of steel may be taken as 200 GPa and Poisson's ratio as 0.3. **(5)**

(OR)

In a condenser vacuum is 720 mm of Hg when the barometer reads 760 mm. Mean temperature of condensate is 32 °C. Exhaust steam that comes to the condenser is 45,000 kg/h, and its dryness fraction is 0.9. Determine the quantity of cooling water required if the temperature rise of cooling water is 12 °C. **(5)**

PAPER-2 (BOILER ENGINEERING-2)

Time: 3.00 Hours **Max. Marks: 100**

(Use of Steam Tables, Mollier Chart and Scientific Calculator are permitted)

Answer all the questions as per given directions. (Marks are indicated at right)

SECTION-I (OBJECTIVE)

Choose the appropriate answer out of the four options. **[1x52]**

1. In Orsat apparatus, pyrogallic acid is used to absorb

(a) CO_2 (b) O_2 (c) N_2 (d) CO

2. In the presence of oxygen, heat is liberated by

(a) potassium chlorate (b) potassium nitrate (c) both of them (d) none of these

3. Thermal efficiency of the Rankine cycle with pump work is

(a) $\eta = \dfrac{(h_1 - h_2) - W_p}{h_1 - h_{f4}}$ (b) $\eta = \dfrac{(h_1 + h_2) - W_p}{h_1 - h_{f4}}$

(c) $\eta = \dfrac{(h_1 - h_2) + W_p}{h_1 - h_{f4}}$ (d) $\eta = \dfrac{(h_1 - h_2)}{(h_1 - h_{f4})}$

where h_1 and h_2 are inlet and outlet enthalpies, and h_{f4} is the enthalpy of water at condenser pressure.

4. In a regenerative feed heating cycle, the greatest economy is affected

(a) when steam is extracted only from the first stage of steam turbine

(b) when steam is extracted from several places in different stages of steam turbine

(c) when steam is extracted only from the last stage of steam turbine

(d) when steam is extracted from only one suitable point of steam turbine

5. Pick the wrong statement with reference to a Rankine cycle.

(a) Raising boiler pressure and temperature raises thermal efficiency

(b) Lowering the condenser pressure raises the thermal efficiency

(c) Raising the steam temperature raises the thermal efficiency

(d) Raising the condenser pressure raises the thermal efficiency

6. Assertion (A): For the same limits of boiler pressure and temperature, the specific stream consumption of ideal carnet cycle is less than that of ideal Rankine cycle.

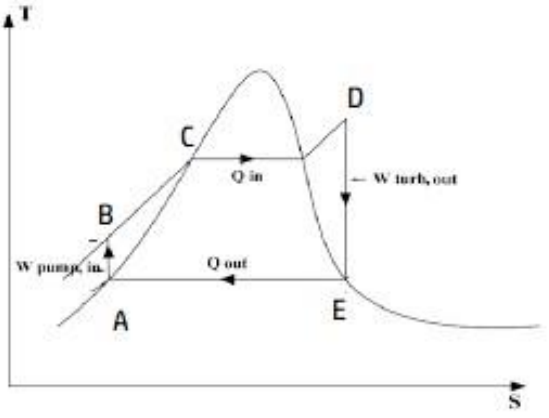

Reason (R): For the same limit of boiler pressure and temperature, Carnot cycle is more efficient than Rankine cycle.

A superheat Rankine cycle is shown in the given T-s diagrams. Starting from the feed pump, the fluid flow up to the boiler exit is represented by state line.

(a) ABCD (b) BCDE (c) ABDEFA (d) ABCDE

7. Treatment of boiler feed water for the control of hardness is necessary to prevent

(a) carryover (b) excessive feed water alkalinity (c) waterside scale deposits (d) foaming

8. In steam and other vapour cycles, the process of removing non-condensable is called

(a) scavenging process (b) deaeration process(c) exhaust process (d) condensation process

9. The control de-superheater of most boilers functions to control

(a) superheated steam flow (b) superheated steam temperature(c) de-superheated steam temperature (d) superheater inlet temperature

10. Boiler rating usually defined in terms of

(a) maximum temperature of steam in K (b) heat transfer rate in kJ/h(c) heat transfer area in m^2 (d) steam output in kg/h

11. Constant pressure lines in superheated region of the Mollier diagram will have

(a) a positive slope (b) a negative slope(c) zero slope (d) both positive and negative slopes

12. Efficiency of chimney draught is about

(a) 10 per cent (b) 70 per cent (c) 1 per cent or less (d) 90 per cent

13. Steam jet draught is used in

(a) Locomotive boiler (b) Lancashire boiler (c) Benson boiler (d) Cornish boiler

14. Dissolved oxygen in feed water results in

(a) corrosion (b) foaming (c) priming (d) scaling

15. Which of the following has least density?

(a) Silica scale (b) Sodium scale (c) Potassium scale (d) Platinum scale

16. 0.22 kg of oxygen, dissolved in 226.58 t of water, is a concentration of

(a) 4.0 ppm (b) 8.0 ppm (c) 16.0 ppm (d) 1 ppm

17. An increase in the concentration of total dissolved solids in boiler water can result from

(a) routine treatment with phosphates (b) dissolved oxygen deaeration
(c) zero water hardness (d) frequent prolonged surface blows

18. Excess free oxygen in the boiler feed water can result from

(a) improper operation of the DC heater
(b) steam leaks through the turbine glands
(c) improper operation of the gland exhauster
(d) vapour lock in the boiler feed pump

19. In a shell and tube surface condenser,

(a) steam and cooling water mix to give the condensate
(b) cooling water passes through the tubes and steam surrounds them
(c) steam passes through the cooling tubes and cooling water surrounds them
(d) all the above varying with situation

20. Air removal in a surface condenser if air is removed, there is

(a) fall in absolute pressure maintained in condenser

(b) rise in absolute pressure maintained in condenser
(c) no change in absolute pressure in the condenser
(d) rise in temperature of condensed steam

21. The cooling section in the surface condenser

(a) increases the quantity of vapour extracted along with air
(b) reduces the quantity of vapour extracted along with air
(c) does not affect vapour quantity extracted but reduces pump capacity of air extraction pump
(d) all of the above

In a boiler following data given.

i. Quantity of steam(dry) generated 12 TPH

ii. Quantity of coal consumed 2.7 TPH

iii. Net enthalpy rise per kg of steam is 540 kcal

iv. GCV of coal is 3000 kcal/ kg

v. Steam pressure & temperature is 10 kg/cm^{2}at 1800 ^{0}C

What will be the boiler efficiency?

a) 60%b) 80%c) 75% d) 85%

22.Steam is generated in a boiler at 110 kg/cm^2 and 522^{0}C. Drum pressure of the boiler is 118 kg/cm^2. Calculate degree of superheat. [Saturated steam temperature corresponding to 118 kg/cm^2 is 322^{0}C and 110 kg/cm2 is 317^{0}C]

a) 200 ^{0}C b) 205 ^{0}C c) 844 ^{0}C d) 839 ^{0}C

23.The safety valve of a boiler is set at 40 kg/cm^2. During testing, it is found that the valve lifts at 44 kg/cm^2 and reset at 38 kg/cm^2. Calculate over pressure percentage.

a) 5% b) 9.1%c) 15% d) 10%

24.For combustion process to obtain 1 kg of oxygen, how much air is required?

a)4.35 kg b) 1 kg c) 4.76 kg d) None of the mentioned

26.Which of the following is not boiler mountings?

a)Pressure gauge b) Feed water check valve (NRV)
c) Soot blower d) Main steam stop valve

27. Hydrogen Sulphide from boiler feed water can be reduced by which of the following process

a)Deaeration b) Coagulation
c) Aeration d) None of the mentioned

28. For a given set of operating pressure limits of a Rankine cycle, the highest efficiency occurs for

a)Saturated cycle b) Superheated cycle
c) Reheat cycle d) Regenerative cycle

29.Consider the following components

i. Radiation evaporator

ii. Economizer

iii. Convection evaporator

iv. Convection super heater

In case of Benson boiler, the correct sequence of entry of water through these components is

a) i, ii, iii, iv b) i, ii, iv, iii
c) ii, i, iii, iv d) ii, i, iv, iii

30. In pulverized fuel fired large power boiler, the heat transfer from the burning fuel to the walls of furnace is

a)By conduction only b) By convection only c) By conduction & convection d) Predominantly by radiation

31. Which one of the following statement is not correct in a fluidized bed boiler?

a) The formation of NO is less than that in the conventional boilers.
b) The combustion temperatures are higher than those in the conventional boilers.
c) Inferior grade of coal can be used without slagging problems.
d) The volumetric heat release rates are higher than those in the conventional boilers.

32. Induced draft fans of a large steam generator have

a)Backward curved blades b) Forward curved blades
c) Straight or radial blades d) Double curved blades

33. What will you do when there are rapid fluctuations in the outlet steam temperature?

a) Water level is to be increased
b) All fuel supply should be cut off immediately
c) Rate of steam generation is to be reduced
d) All the mentioned

34. Short-term overheating usually exhibits

a)Thick lip longitudinal rupture b) Thin lip longitudinal rupture
c) Transverse cracks d) Severe pitting

35. Ash handling system is not required in

a)Pulverized coal-fired boiler b) Coal gas-fired boiler
c) Traveling grate-fired boiler d) None of the mentioned

36. Water velocity, saturated steam velocity and superheated steam velocity through the pipes is in the descending order as under

a) Water > saturated steam > super-heated steam
b) Water > super-heated steam > saturated steam
c)Saturated steam > water > super-heated steam
d)Saturated steam > super-heated steam > water

37. In circulating fluidized bed combustion (CFBC) boiler which type of fan/blower deliver air at the highest pressure

a)Primary air fan b) Secondary air fan
c) Tertiary air fan d) Loop seal air blower

38. What is used to control NO_x emission, once it is formed

a)Ammonia b) Silica
c) Alum d) None of the mentioned

39. What is the value of circulation ration for once through steam boilers?

a) 1 b) 3 to 10 c) 4 to 30 d) 0.5

40. In steam generators, a stokers act as one of the following devices, what is this device?

a)Air preheating device b) Steam superheating

c) Air superheating device d) Fuel feeding device

41. An apparatus used to reduce the temperature and heat content of a superheated steam is called

a)Steam separator b) Attemperator

c) Air preheater d) Feed check valve

42TDS of 50 TPH boiler water is required to be maintained at 22 ppm. TDS of make-up feed water is 2ppm. Calculate percentage of blowdown required to maintain this TDS level.

a) 11%b) 10%c) 50%d) None of the mentioned

43. To prevent foaming & priming in boilers which measure should be taken?

a) Maintain the concentration of solids in boiler water at low levels

b) Avoid sudden load changes

c) Avoid high water levels

d) All the mentioned

44. As per IS 8753 which should not be used to measure steam & water pressures from the following?

a)Bourdon type gauges b) Dead Weight gauges

c) Diaphragm gauges d) All of the mentioned

45. When inspection doors on the walls of boilers are opened, flame does not leap out because

a) These holes are small

b) Flame travels always in the direction of flow

c) The holes are located beyond the furnace

d) Pressure inside is negative

46. In combustion process, the effect of dissociation is to

a) Reduce the use of excessive air

b) Reduce the flame temperature

c) Reduce the proportion of carbon monoxide in gases

d) Separate the products of combustion

47. Which of the following is gravimetric coal feeder?

a)Rotary feeder b) Screw feeder c) Drag chain feeder d) Weight belt

48. What will be the effect of non-condensable gases in steam?

a)Non-condensable gases reduce the steam temperature & its partial pressure

b)Non-condensable gases increase the steam temperature & its partial pressure

c)Non-condensable gases prevent corrosion

d)None of the mentioned

49.A boiler feed water pump delivers water at 4250 K while operating at 3200 rpm. If this pump is switched off which thermo - hydraulic phenomenon will occur inside the pump?

a)Water hammer effect b) Thermo- siphon effect

c) Cavitation d) None of the mentioned

50. As per amendment in Boilers Act, 2007 boiler is covered under the Boilers Act, if it will have following conditions

a) Cap: > 25.0 liters; Design and working Pressure: 1.0 kg/cm^2 (gauge) and temperature: >100 ^{0}C
b) Cap: <25.0 liters; Working Pressure: >2.5 kg/cm2 (gauge) and temperature: > 150 ^{0}C
c) Cap: > 25.0 liters; working Pressure: > 3.5 kg/cm2 (gauge) and temperature: >273 ^{0}C
d) Cap: < 25.0 liters; working Pressure: > 3.5 kg/cm2 (gauge) and temperature: >273 ^{0}K

51. Gusset stays in a boiler are provided to

a)Prevent the bulging of flat surfaces b) Avoid explosion in furnace
c) Prevent leakage of hot flue gases d) Support furnace freely from top

52. Pour point of fuel oil is the

a) Lowest temperature at which oil will flow under set condition
b) Storage temperature
c) Temperature at which fuel pumps through burners
d)Temperature at which oil is transported

SECTION-II (SUBJECTIVE)

1. Answer the following questions. **(2x5=10)**

a) Draw a neat diagram of thermal power plant using coal as fuel.
b) What is migration velocity and how it can be calculated?
c) Differentiate between direct and indirect method of evaluating power plant performance.
d) What is meant by mixed-type cooling system?
e) Why in a modern power plant air cooled cooling systems are preferred than water cooled cooling system?

2. Answer any FOUR questions. **(5x4=20)**

(a) Show a simple Rankine cycle on p–V and T–s plane using dry saturated steam at the beginning of expansion. Write the expression for its efficiency with and without pump work. Also, draw the schematic diagram of the steam plant for the above and name all the components.

b) Write the short notes on the followings:

(i) Stress tensor (ii) Concept of compatibility (iii) Airy's function

c) Write a short note on protective equipment and control panel instrumentation. Also discuss the method of automatic combustion control.

d) Explain the below heat balance diagram.

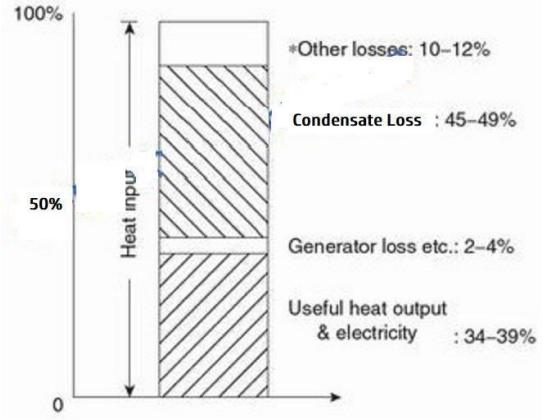

e) Why are different types of chimneys in practice? Explain the basis of their selection.
f) What are the different losses that are generally taken into account in designing the draught system.

SECTION-III (NUMERICAL)

1. Answer ALL the questions.

a) The draught produced by a forced draught fan is sufficient to overcome the total frictional losses of the system at 20 mm of water level and to impact the velocity of 10 m/sec to the flue gases passing through the chimney. The amount of coal burned per hour is 1200 kg and air supplied is 12 kg/kg of coal burned.

(i) Assuming the atmospheric pressure of 1.03 bar and 27°C and mechanical efficiency of 80 per cent, find out the power required for a prime mover assuming the mechanical efficiency of 80 per cent. **(4)**

(ii) If the same draught is produced by using ID fan and allowing the flue gases to exhaust at 120°C, find out the power of the prime mover required assuming the same mechanical efficiency. **(4)**

b) A steam turbine gets steam at 60 bar and 450 °C from a steam generator that expands to a condenser pressure of 0.07 bar. Some amount of steam is bled from the turbine at 3 bar to heat the feed water from the condenser. Steam turbine generates 30 MW through a directly coupled generator with 95 per cent efficiency. Assuming turbine efficiency of 90 per cent determines

(i) the amount of steam bled/kg of steam entering the turbine.

(ii) the steam generation per hour.

(iii) the overall efficiency of the plant if boiler efficiency is 92 per cent and mechanical efficiency is 98 per cent.

Assume the pump work is negligible and 15 per cent of generated power is used to run auxiliaries. **(10)**

OR

A steam turbine receives steam at 15 bar and 300°C and leaves the turbine at 0.1 bar and 4% moisture. Determine

(i) Rankine efficiency **(2)**

(ii) Steam consumption per kW per hour if the efficiency ratio is 0.70 **(3)**

(iii) Carnot cycle efficiency for the given temperature limits **(3)**

(iv) Change in Rankine efficiency and specific consumption if the condenser pressure is reduced to 0.04 bar. **(2)**

ASSAM BOILER OPERATION ENGINEER EXAMINATION-2022
PAPER-3 (ENGINEERING DRAWING)

Time: 3.00 Hours **Max. Marks: 100**

(Use of drafter, Roller scale, geometrical compass boxes are permitted)

Answer all the questions as per given directions. (Marks are indicated at right)

SECTION-I (OBJECTIVE)

Choose the appropriate answer out of the four options. [1x20]

1. An engineering drawing is only a means of recording the intensions of the designer and communicating these to the manufacturer. Now cheaper methods of communication such as CAD where the drawings are stored digitally on magnetic or optical disks and can be transmitted between companies by the internet. However, hard copy, of printed drawing, still must be produced.

(a) for the inspection or the technician to work with
(b) for legal contract agreement
(c) for immediate reference during discussion
(d) for all of (a), (b) & (c)

2. Which of the following publications made by Bureau of Indian Standards includes standard technique for line conventions in detail?

(a) SP 46: 2003 (b) BIS 696 (c) ASME Y 14.2 M (d) ISO 2009

3. Freehand sketches have only NTS (not to scale) dimensions.

(a) True (b) False (c) Sometimes(d) none of these

4. Freehand sketches can be

(a) isometric view
(b) perspective view
(c) simple line diagram
(d) all of these

5. If required to draw orthographic projections of simple object in freehand sketching, generally only - views are made.

(a) 1 (b) 2 (c) 3 (d) 6

6. A site engineer is using a freehand sketch for some modification in the available drawing. To clarify the modification to construction staff, he shows the existing lines (to be modified) in

(a) bold line (b) dotted line
(c) geometrically drawn (d) none of these

7. Scale selected for drawing a component is 1:5. Name the type of scale to compare the given ratio.

(a) reduced (b) enlarged (c) full (d) diagonal

8. Diagonal scales are readily available to a draftsman

(a) True (b)False (c) sometimes (d) none of these

9. When two angles together make 90°, they are called

(a) obtuse angles (b) reflex angle(c) complementary angles(d) supplementary angles

10. When you cut a right circular cone by a plane parallel to its base (or perpendicular to the axis of the cone), the shape of the top of the frustum of cone is

(a) circle (b) ellipse (c) any curve (d) straight line

11. The m/c block shown in below figure is shown in ____ view.

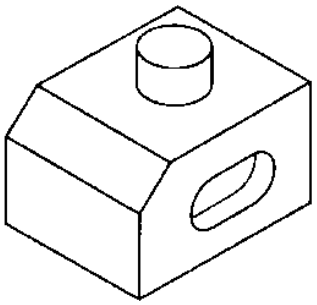

(a) perspective (b) isometric (c) oblique (d) none of these

12. In orthographic projection, the projectors and plane of projection are at angle of

(a) 30º (b) 60° (c) 45° (d) 90°

13. SP 46: 2003 recommends ____ projection.

(a) 1st angle (b) 3rd angle

(c) both (a) and (b) (d) none of these

14. In third angle projection the left-hand side view is always ____.

(a) Right side of the front view

(b) Above the front view

(c) Left side of the front view

(d) None of these

15. A line of 25 mm length is shown as 25 mm in front elevation and plan. How is it placed with respect to HP and VP?

(a) The line is perpendicular to both HP & VP

(b) The line is perpendicular to HP & parallel to VP

(c) The line is parallel to both HP & VP

(d) The line is inclined to both HP & VP

16. Figure shows the FV, TV and EV of a machine block. Considering the FV is correctly drawn, the number of missing lines in EV and TV are:

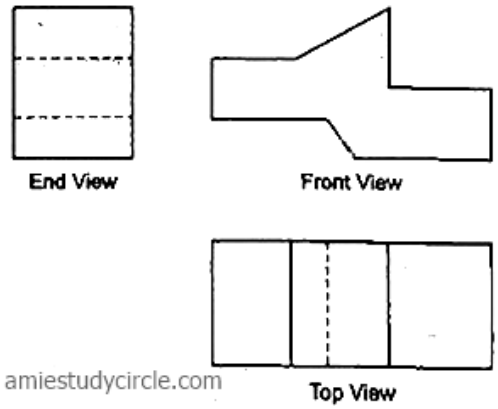

amiestudycircle.com

(a) EV-one solid horizontal line (b) TV-one dotted line
(c) both (a) and (b) (d) None

17. In the given Fig. of machine block, the number of horizontal(H) & vertical(V) surfaces are

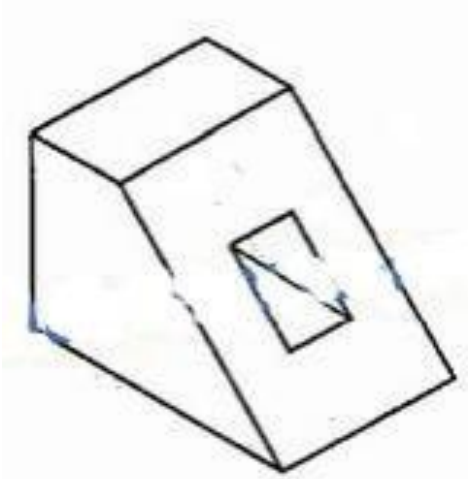

(a) H(2), V(2) (b) H(4), V(4) (c) H(2), V(4) (d) H(2), V(5)

18. The minimum diameter of screw thread is known as:

(a) minor diameter (b) pitch diameter (c) creast diameter (d) root diameter

19. Rivets are ____ bodies set.

(a) conical (b) rectangle (c) cylindrical (d) any one of (a)/ (b)/ (c)

20. The check valve allows flow in ____ direction(s).

(a) one (b) two (c) three (d) depends on the connection

SECTION-II (SUBJECTIVE)

1. Answer the following questions. (4x6=24)

a) When is a projection of an object called an orthographic projection?

b) Explain the following, indicating the symbol to be used in each case:
(i) First angle projection, (ii) Third angle projection

c) What is a fastener and what is meant by fastening? What are the various applications of screwed fasteners?

d) What is a knuckle joint and where is it used? What is the difference between the eye end and fork end of a knuckle joint?

e) Name different types of pulleys? How are pulleys mounted on shafts?

f) Calculate the maximum and minimum limits for both the shaft and hole in the following: using the tables for tolerances and name the type of fit obtained:
(a) 45H8/d7 (b) 180H7/n6 (c) 120H7/s6 (d) 40G7/h6 (e) 35 C11/h10

SECTION-III (DRAWING)

As per the given instruction draw the following questions (use the given board sheet).

1. The part drawings of a blow-off cock are shown in below Fig. Assemble the parts and draw, (i) sectional view from the front and (ii) view from above **(8)**

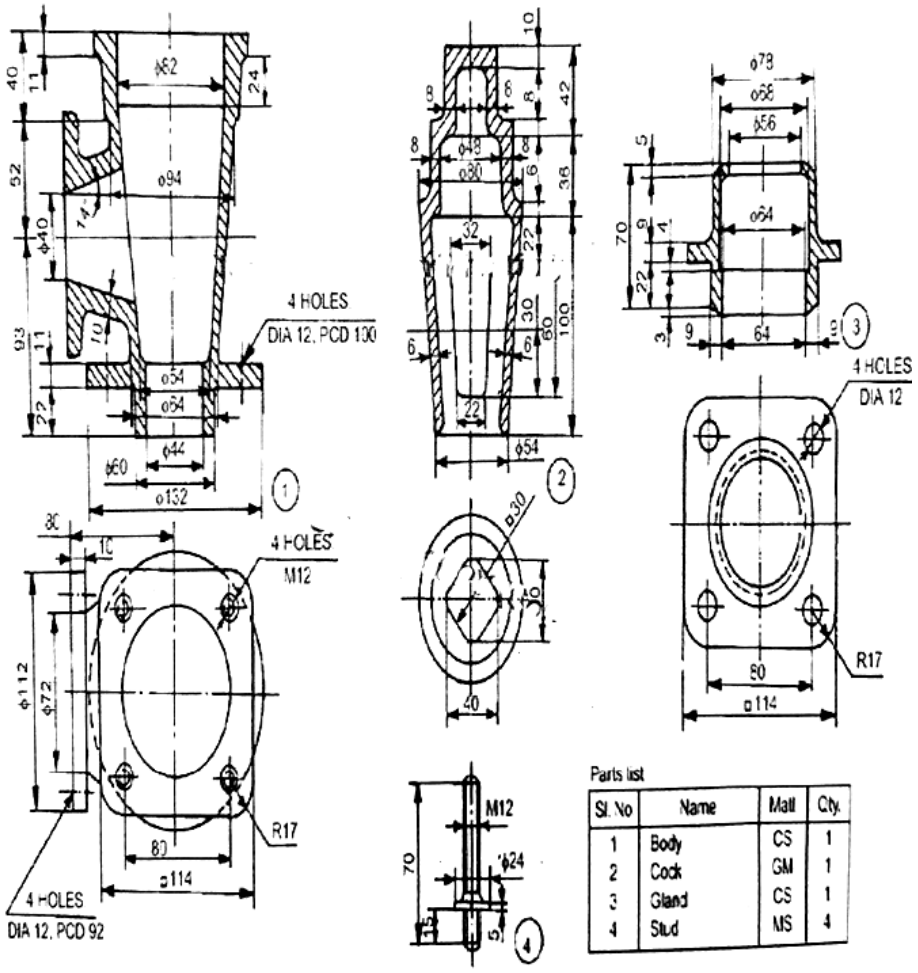

2. Assemble the parts of the feed check valve, shown in below and draw, (i) sectional view from the front, (ii) view from the right and (iii) view from above. **(20)**

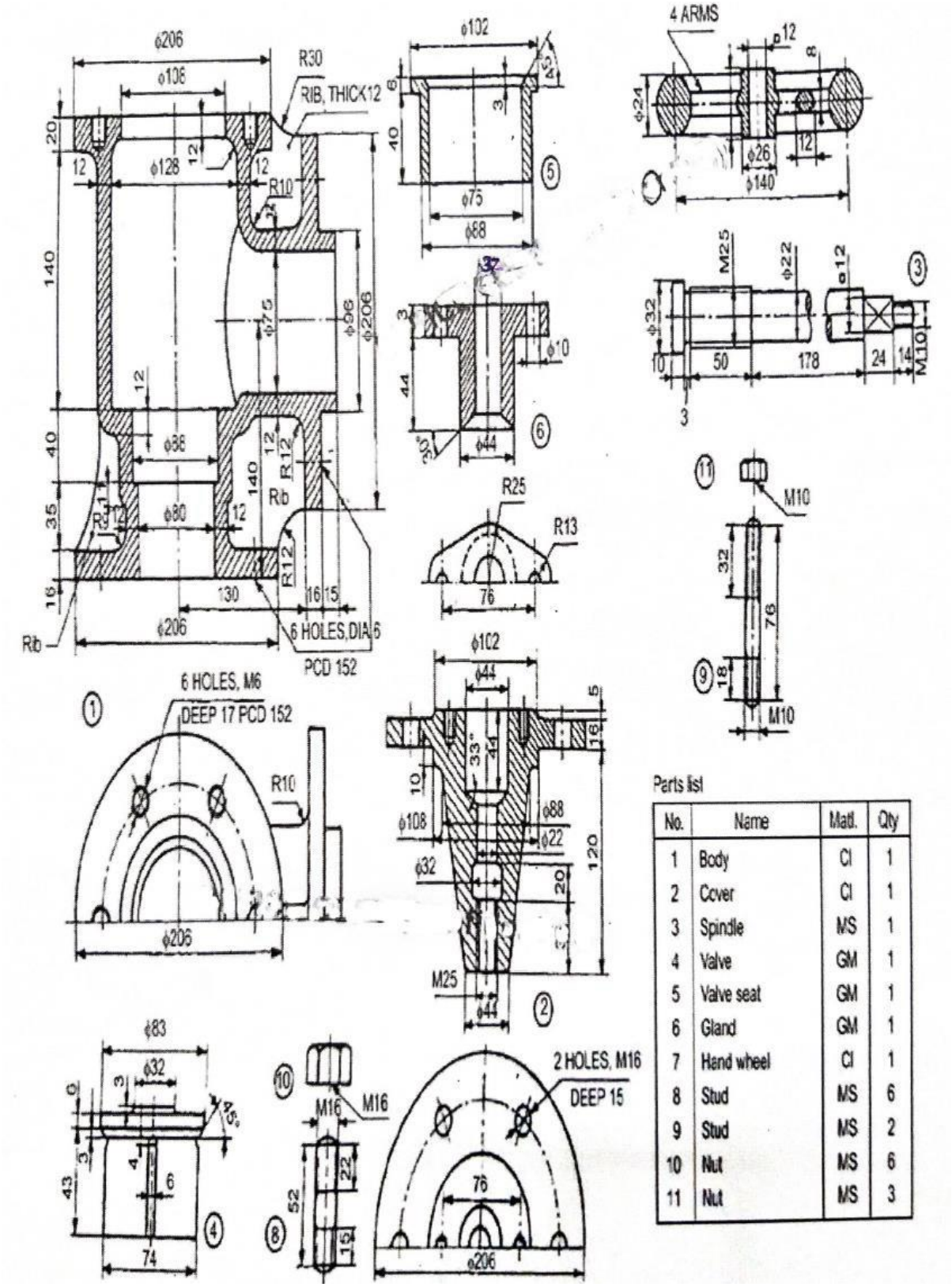

Parts list

No.	Name	Matl.	Qty
1	Body	CI	1
2	Cover	CI	1
3	Spindle	MS	1
4	Valve	GM	1
5	Valve seat	GM	1
6	Gland	GM	1
7	Hand wheel	CI	1
8	Stud	MS	6
9	Stud	MS	2
10	Nut	MS	6
11	Nut	MS	3

3. Draw a neat diagram of Pressurised Fluidised Bed Combustion (PFBC) Boiler by clearly indicating the water and steam path. (Answer to be made in the provided sheet only). **(8)**

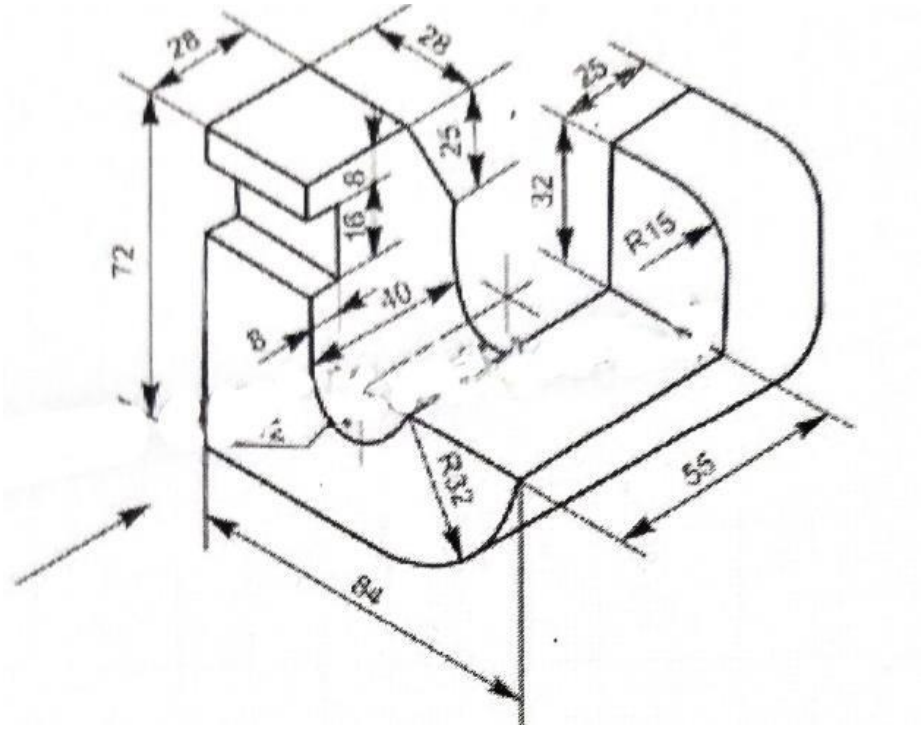

4. Figures show the isometric views of machine components and their view from the front, the view from above and the view from the right. Arrow indicates the direction to obtain the view from the front. Draw the orthographic views of the same. **(10 x 2)**

