Study Material For Boiler Operation Engineer (BOE) Exams

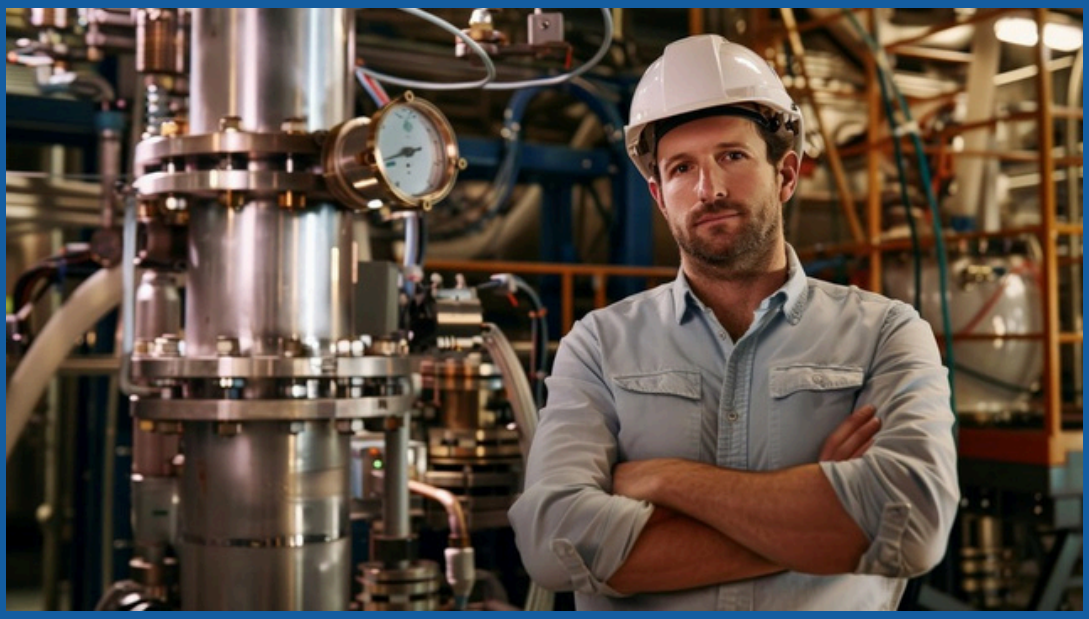

Theory, Numerical Problems, MCQs and Boiler Drawing Problems from BOE Exams

Amazon Flipkart Pothi

PROENGR.IN

SUDESH K JAIN

ASSAM BOILER OPERATION ENGINEER EXAMINATION-2015
PAPER-1(BOILER ENGINEERING-1)

Time: 3.00 Hours **Max. Marks: 100**

(Use of Steam Tables and Mollier Chart are permitted)

PART-A

Answer all the questions as per given directions.

[A] : Choose the appropriate option. **[20]**

1. Boiler registry number shall be engraved on boiler.
   A. Within a period of one month from boiler registration.
   B. Within a period of six month from boiler registration.
   C. Within a period of one month from date of receipt of it.
   D. Within a period of six month from date of receipt of it.

2. An economizer is generally placed between
   A. Last super heater or reheater and air preheater
   B. Induced draft fan and forced draft fan
   C. Air preheater and chimney
   D. None of the above

3. In the Rankine Cycle, heat is added reversibly at
   A. Constant pressure and constant temp
   B. Constant pressure and infinite temp
   C. Infinite pressure and constant temp
   D. Infinite pressure and Infinite temp

4. Which is not a part of an Electrostatic precipitator?
   A. Rapping System B. GD Screen C. Hopper Heater D. None of the above

5. Calorific value of bituminous coal may be around ----------Kcal/kg.
   A. 500 B. 1500 C. 6500 D. 20000

6. Furnace oil consumption in a furnace for a given duty employing preheated combination air (at 300*C) may be reduced by about ----------percent as compared to the use of atmospheric combustion air.

A. 5	B. 10	C. 20	D. 35

7. Which is not required for determining economic thickness of steam line?

A. Cost of fuel	B. Boiler Efficiency
C. Enthalpy of steam	D. Calorific value of fuel

8. The stoichiometric amount of air required to burn 1Kg of methane is

A. 69.88	B. 44.3	C. 11.76	D. 17.19

9. In a boiler, flue gas path is often changed, for the following reasons:
(I) Controlling the size of the boiler.
(II) Improving the heat transfer.
(III) To minimize the use of straight tubes.
Priority wise the reason is

A. I-II-III	B. I-III-II	C. II-III-I	D. III-II-I

10. The correct sequence of factors in order of decreasing importance for location of a thermal power plant is

A. Load, Coal, Water	B. Coal, Water, Load
C. Water, Load, Coal	D. Water, Coal, Load

11. If the flame is quenched before all the combustible elements in the flame have been burnt, the unburned carbon will deposit as----------on the heating surfaces.

A. Fly ash	B. Soot	C. Volatiles	D. Salt

12. Specific----------is the weight of a given volume of a material divided by the weight of an equal to volume of water.

A. Weight	B. Volume	C. Gravity	D. None of the above

13. Reciprocating pump is suitably for which pressure.

A. High pressure	B. Medium pressure
C. Low pressure	D. None

14. Make up water is used in a steam boiler system to

A. Replace condensate that is lost from the system due to leaks or drainage.
B. Replace water lost from the system in the form of steam leaks.
C. Replace water in the form of steam that is directly injected into a product or for humidification.
D. All the above

15. The down-comer tubes in a water tube boiler contain the---------- water.
A. Outer, rising B. Inner, rising
C. Outer, descending D. Inner, descending

16. The material commonly used in boiler drum is
A. SA299 B. SA213 TP347 C. SA213 T91 D. SA213 T11

17. Minimum length of the visible portion of the gauge glasses shall be--------
A. 100mm B. 150mm C. 25mm D. 15mm

18. According to boiler terminology, formation of steam bubbles on the surrounding of water is called----------

A. Foaming	B. Scale	C. Lagging	D. Bubbling

19. Which of the following is not a fire tube boiler?

A. Cochran Boiler	B. Lancashire Boiler
C. Locomotive Boiler	D. Webcock and Wilcox Boiler

20. The path followed in a vapour power cycle is

A. Boiler - condenser - turbine - pump	B. Boiler - turbine -- condenser - pump
C. Boiler - pump - turbine - condenser	D. Boiler - pump - turbine - condenser

[B] : Mention the given statements are TRUE or FALSE by putting "T" and "F" in the provided space. [20]

1. It is compulsory to get prior approval for drawing of steam pipeline before installation.
2. The thermal shock is the stress imposed on the boiler metal by a sudden and drastic change in pressure.
3. Water can be compressed to 75% of its original volume.
4. Clinkering can be caused by a lack of combustion air.
5. Combustible in the refuge are burned fuel in the ash.
6. Biomass fuel burns very slowly while it keeps the furnace hot.
7. Feed check valve is used to empty the boiler when it is required to be cleaned.
8. The black accumulation of soot and slag on boiler tubes can cause increased resistance to the path of flue gases through tube banks.
9. A drop in the percentage of CO2 and a rise in the percentage of O2, in the flue gases between the furnace and the stack indicates in leakage of air somewhere in the breeching.
10. Excessive flue gas temperatures can result from damaged baffles.
11. A feed pump supplies more fuel oil than is used by the burner.
12. Deaerator may operate under atmospheric pressure or a higher pressure.
13. Bottom blow down is more effective when it is used during light-load periods.
14. Evaporator may operate under a vacuum, allowing less energy and a lower boiling temperature to be used.
15. The carnot cycle cannot be realized in practice.
16. There is about 15 to 20% of coal saving when an economizer is used in a boiler.
17. CBD Valve is used to control pH of boiler water.
18. Expansion loop is providing on steam piping to reduce condensing of steam.
19. Volumetric capacity of ID fan will be same as that of FD fan of the same boiler.
20. As per IBR, absolute water level gauge is not must for a high capacity boiler having steam drum located above 30feet height from operating floor level.

[C]: Find and mention the appropriate match up of the Table-A with Table-B. [12]

TABLE-A		TABLE-B	
1	Fluid	A	Boiler Horsepower.
2	Vacuum	B	Transfer of heat from a hot body to a cold body without physical contract or
3	Steam		a conveying medium.
4	Square foot	C	Pressure less than atmospheric pressure.
5	Radiation	D	Inches of mercury.
6	Centigrade	E	Gaseous form of water.
7	in Hg	F	Transfer of heat by actual physical contact.
8	Convection	G	144 sq. in.
9	BHP	H	Transfer of heat by conveying medium.
		I	Any material that can flow from one point to another.
10	Conduction	J	Obsolete term for Celsius temperature.
11	Kilo Calorie	K	Determination of the velocity of the steam inside the system.
12	K Factor	L	Amount of heat(energy) necessary to raise the temperature of 1Kg of water 1*C

PART-B

Answer any FOUR of the given question. **[5x4=20]**

Q.1: Explain the reasons for dividing the super-heaters in to primary and secondary.
Q.2: Differentiate between smoke tube and water tube boiler.
Q.3: Draw the schematic circuit of super charged boiler by notifying each part/section.
Q.4: Explain the steam, water and flue gas circuit path of a CFBC boiler.
Q.5: What is boiler mounting and accessories? List out the used mountings and accessories used in a boiler.

Answer all of the questions. **[2x5=10]**

Q.6: What are the reasons for loss of boiler efficiency?
Q.7: What is LOI?
Q.8: What could be the reason for sudden increase or decrease in furnace temperature?
Q.9: How do you set cold and hot load on variable spring support?
Q.10: Explain the term: Priming, Carryover, Foaming and Fouling.

PART-C

Answer all the following questions. Marks mentioned at the right.

Q.1: A sample of coal burnt in a boiler furnace, contains 55% carbon, 5% hydrogen, 8% oxygen, 2% sulphur, 5% moisture and 25% ash. Determine the mass of air required for complete combustion of coal. Assume that air contains 23% oxygen by weight. Also determine the weight of the combustion products per kg of fuel burnt. Estimate the mass of combustion products and also the mass of air required if the excess air is 20%. [8]

Q.2: The boiler is generating 10 tons/hr steam, at pressure of 11kg/cm2. Feed water supplied contains 300ppm TDS. Maximum TDS permitted are 3000ppm. Feed water is heated by blow down water. Blow down water is drained at 70*C temperature. Find:
(i) Quantity of blow down.
(ii) Blow down in terms of % of FW.
(iii) Blow down in terms of % of steam generated.
(iv) Amount of flash steam, which will generate from blow down water.
(v) Total heat recovered. [10]

ASSAM BOILER OPERATION ENGINEER EXAMINATION-2015
PAPER-2 (BOILER ENGINEERING-2)

Time: 3.00 Hours **Max. Marks: 100**

(Use of Steam Tables and Mollier Chart are permitted)

PART-A

Answer all the questions as per given directions.

[A] : Choose the appropriate option. **[1x20=20]**

1. The temperature of 72*F equals to ----------*C

A. 22.22	B. 40	C. 72	D. 10.4

2. At how much temperature does the product of combustion should be cooled down to get Gross Calorific Value?

A. 288*K	B. 315*K	C. 390*K	D. 350*K

3. Pour point of the fuel oil is the

A. Minimum temperature to which oil is heated to give off inflammable vapors in sufficient quantity to ignite momentarily when brought in contact with a flame.
B. Temperature at which it solidifies or congeals.
C. Indicated by 90% distillation temperature, i.e., when 90% of sample oil has distilled off.
D. Temperature at which if flows easily.

4. What is the standard fixed point of thermometry?

A. The Ice point	B. The steam point
C. The triple point of water	D. None of the mentioned

5. Draft pressure are expressed in

A. PSI	B. Inches of water
C. Inches of mercury	D. None of the above

6. How is the oxidation of coal eliminated?

A. By exposing it to the sunlight
B. By burning the entire coal heap upside down periodically
C. By circulating air uniformly
D. By burning coal at very high temperatures

7. Which fuel is commonly available in both caking and non-caking forms?

A. Lignite	B. Bituminous	C. Peat	D. Anthracite

8. Scale forming impurities become concentrated in boiler water by

A. Solidification as water temp increases	B. Evaporation as the water boils off
C. Both A & B	D. Neither A nor B

9. Boiler rating is usually defined in terms of

A. Maximum temp of steam in Kelvine	B. Heat transfer rate in KJ/hr
C. Heat transfer area in meter 2	D. Steam output in kg/hr

10. Bomb Calorimeter is used to determine the calorific value of

A. Solid fuel only	B. Gaseous fuels only
C. Solid as well as gaseous fuels	D. Solid as well as liquid fuels

11. Proximate analysis of coal, % fixed carbon=----------

A. 100-% (ash + volatile matter + moisture)	B. 100-% (ash + moisture)
C. 100-% (ash + moisture) + % volatile matter	D. 100-% (moisture + volatile matter)

12. Assuming a normal water level in the boiler, the top try cock should blow when opened

A. Pure steam	B. Mixture of steam and water
C. Water with some flash steam	D. Pure water

13. What is the purpose of using ball check valves in a gauge glass installation?

A. To automatically bleed the pressure from the boiler if the gauge glass should break.
B. To permit blowing down the gauge glass to remove impurities.
C. To automatically shut off flow to the gauge glass if the gauge glass should break.
D. To permit removal of the gauge glass for cleaning while the boiler is in operation.

14. The dry layup method is used for ----------boiler storage.

A. 24 hours	B. Short term	C. Long term	D. None of the above

15. Which instrument is used to monitor O2, CO level in flue gas?

A. Combustion analyser	B. Power analyser	C. Pyrometer	D. Fyrite

16. When equal and opposite forces applied to a body, tend to elongate it, the stress so produced, is called

A. Shear stress	B. Compressive stress
C. Tensile stress	D. Transverse stress

17. The phase where any substance loses the distinction between liquid or vapour is called

A. Crystal point	B. Ignition point
C. Critical point	D. Dew point

18. The blow down for safety valve is given by

A. (Set pr)/(Set pr.-Reseating pr.)	B. Reseating pr./Set pr.
C. (Set pr.-Reseating pr)/(Set pr.)	D. Reseating pr./(Reseating pr.-Set pr.)

19. Maximum thickness of plate for corrugated furnace is

A. 18mm	B. 20mm	C. 22mm	D. 24mm

20. Rankine cycle efficiency of a good steam power plant may be in the range of

A. 15-20%	B. 35-45%	C. 70-80%	D. 80-85%

[B] : Mention the given statements are TRUE or FALSE by putting "T" and "F" in the provided space. [1x20=20]

1. Tension is the extortion of equal forces pulling in opposite directions that can stretch and object.
2. The greatest loss in boiler plant is heat up the stack.
3. Disparity prevent solids in boiler water from sticking together to form deposits.
4. One of the primary purposes of blow down is to remove sludge and impurities from boiler.
5. A flat gauge glass is normally used with boilers operating at 100 PSI or less.
6. A boiler should be shut down before the water level in the gauge glass drops below the lowest visible point in the gauge glass.
7. Oxygen in the steam and condensate system could cause redness in a boiler.
8. Bags are caused by scale deposits on the water side of the steel plate.
9. The amount of water evaporated or steam produced in kg per kg of fuel burnt is known as power of a boiler.
10. The damper in a steam boiler is provided to control the draught and thus regulate the rate of generation of steam.
11. A condenser where circulating water flows through tubes which are surrounded by steam is known as Jet condenser.
12. In order to compare the capacity of boilers, the feed water temperature and working pressure are taken as 50 degree centigrade and 1.1 bar pressure.
13. The ratio of the temperature rise of cooling water to the vacuum temperature minus inlet cooling water temperature is called condenser efficiency.
14. A water level indicator is a device to indicate the exact water level in the boiler at any instant.
15. A device used to empty the boiler whenever required and to discharge the mud, scale or sentiments accumulated at the bottom of the boiler is called blow off cock.
16. N_2H_2 is an Oxygen scavenger.
17. To make the flue gas path clear and increase the heat rate steam blowing is done in boiler.
18. Pitting is due to the presence of uncontrolled oxygen or acid.
19. The flue gases of natural draught are at higher temperature when compared to the flue gases in artificial gas.

20. The frictional resistance offered to the flow of flue gases by the grate and gas passages result in draught losses.

[C] : Find and mention the appropriate match up of the Table-A with Table-B. [1x12=12]

TABLE-A		TABLE-B	
1	Flash Point	A	Deformation caused by excessive heat in conjunction with internal pressure.
2	Hygrometer	B	Rotating wheel of a centrifugal pump.
3	Check Valve	C	Measurement of thermal radiation.
4	Impeller	D	Designed to prevent reversal of flow.
5	pH	E	Safety of equipment.
6	Interlock	F	Amount by which the temperature of a superheated vapour exceeds the temperature of the saturated vapour at the same pressure.
7	Bulging	G	Temperature at which a material to give off sufficient vapour to form a flammable mixture.
8	Degree of super heat	H	Instrument used to measure degree of moisture in the atmosphere.
9	Bolometer	I	Orsat Apparatus.
		J	Stagnation pressure.
		K	Potential of hydrogen.
		L	Gross Calorific Value measurement.
10	Calorimeter		
11	Pitot Tube		
12	Volumetric analysis of flue gas		

PART-B

Answer any FOUR of the given question. [5x4=20]

Q.1: The vacuum in a condenser is 68cm of Hg with barometer reading 76cm of Hg. If the inlet and outlet temperature of cooling water to a condenser are 28*C and 42*C, Calculate the condenser efficiency.

Q.2: What are the different types of thermocouples are generally used in power plants? Explain various pressure sensing elements.

Q.3: On what factors ESP efficiency depends? Briefly explain various parts of ESP along with working principle.

Q.4: What is the significance of expansion pointers? Narrate the factors on which boiler pressure point expansion depends on.

Q.5: In which standard of BIS, boiler water and steam parameters are analysed? Differentiate between proximate and ultimate analysis.

Q.6: Why dosing is required in boiler? Explain the working principle of LP and HP dosing system by mentioning the role of agitator in dosing pump.

Answer ALL of the questions.

[2x5=10]

Q.7: What is single and three element control system in boiler. Draw and mention.

Q.8: Define: Latent heat, Sensible heat and Super heat.

Q.9: What is the difference between centrifugal pump and positive displacement pump?

Q.10: A steel bar of 40mm x 40mm square cross section is subjected to an axial compressive load of 200kN. If the length of the bar is 2m and E=200GPa, calculate the elongation of the bar.

Q.11: What are the prudent steps in NOx control strategy?

PART-C

Answer ALL the following questions. Marks mentioned at the right.

Q.1: Calculate using steam table:

(i) The total heat of steam at 140bar pressure (abs) and at 450*C temperature. Find the average heat required per kg for per degree rise in temperature. [3]

(ii) Find the total heat of steam at 50bar and dryness fraction is 0.80. [2]

(iii) An oil fired boiler working at a pressure of 15bar, generate 14.5 kg of steam of per kg of fuel burned. The feed water temperature is 95*C and dryness fraction of steam is 0.98. If the calorific value of fuel oil is 42x103 Kj/kg, calculate the thermal efficiency of the boiler and the [e5q]uivalent evaporation from and at 100*C.

Q.2: A chimney produces a draught of 1.8cm of water when temperature of flue gases is 280*C and atmospheric temperature is 21*C. The flue gases formed per kg of fuel burnt are 24kg. Taking diameter of chimney at 1.7m, determine the mass of flue gases flowing through the chimney. [8]

ASSAM BOILER OPERATION ENGINEER EXAMINATION-2015

PAPER-3 (ENGINEERIG DRAWING)

Time: 3.00 Hours **Max. Marks: 100**

Answer all the questions as per given directions.

Q.1: Define the following terms in connection with engineering/machine drawing.

[1x15=15]

a. Third Angle projection	b. Orthographic view	c. Missing view
d. Sectional drawing	e. Cross-sectional viewing	f. Screw
g. Dome nut	h. Woodruff key	i. Battery valve
j. Taper	k. Fusion welding	l. Gusset stay
m. Shrink fit	n. Gear nut	o. Assembly drawing

Q.2: Answer the following questions. **[2x15=30]**

Q.2a: Why second and fourth quadrants are not used in practice?
Q.2b: Differentiate between first angle and third angle projection.
Q.2c: What are the particulars of a title block in a machine drawing sheet.
Q.2d: What are the two joints generally used in screw?
Q.2e: State the differentiate between a right hand and left hand thread.
Q.2f: What are the types of nuts?
Q.2g: What is parallel key?
Q.2h: What is zero line?
Q.2i: What are the different types of geometrical tolerances?
Q.2j: Give a detail of the types of bearings used.
Q.2k: Explain the following diagram.

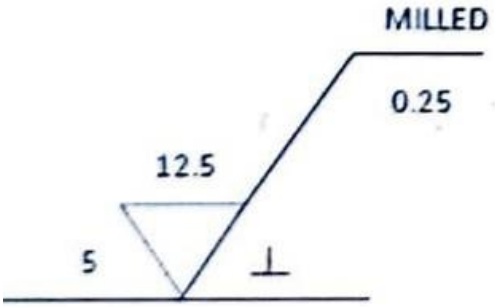

Q.2l: Explain the ways of failure of riveted joints.
Q.2m: How does a feather key differ from taper key?
Q.2n: Where do you find woodruff key and cone key?
Q.2o: Mention different types of nuts and washers.

Q.3: Mention/explain/what type of the drawings as illustrated below. **[2x5=10]**

Q.3a:

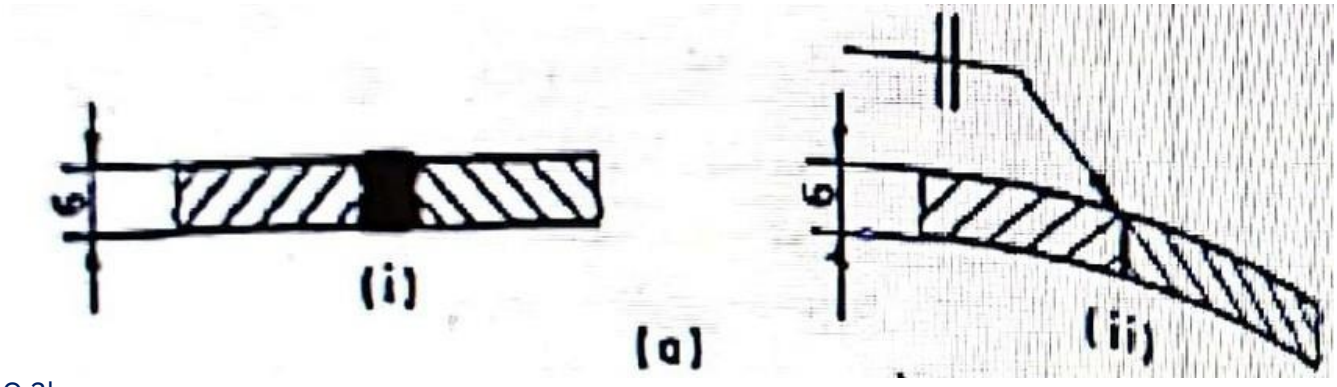

Q.3b:

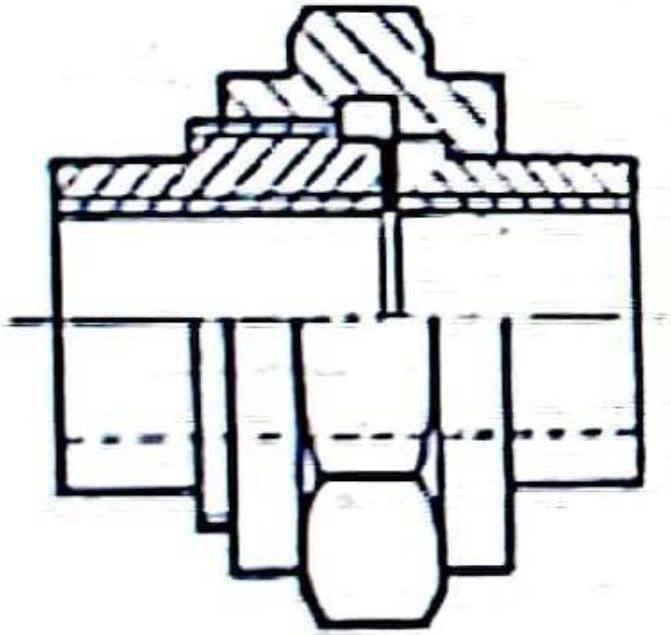

Q.3c:

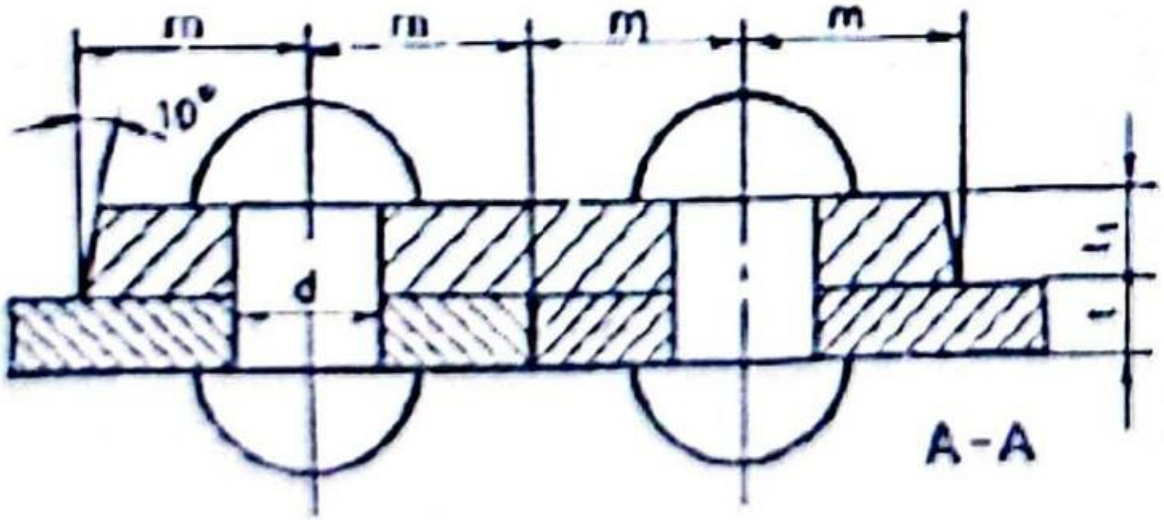

Q.3d: Mention the nomenclature as mentioned arrow (a to e) of the given foundation bolts.



Q.3e:

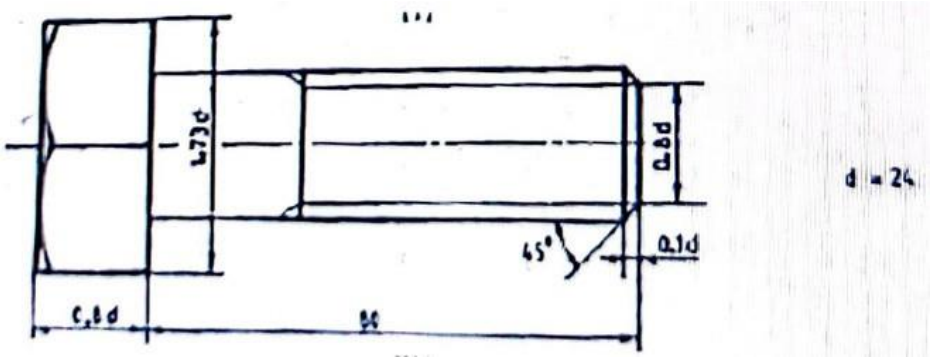

PART-B

Q.1: Draw the orthographic views of a cast iron column base as seen in the direction marked in the figure given. [15]

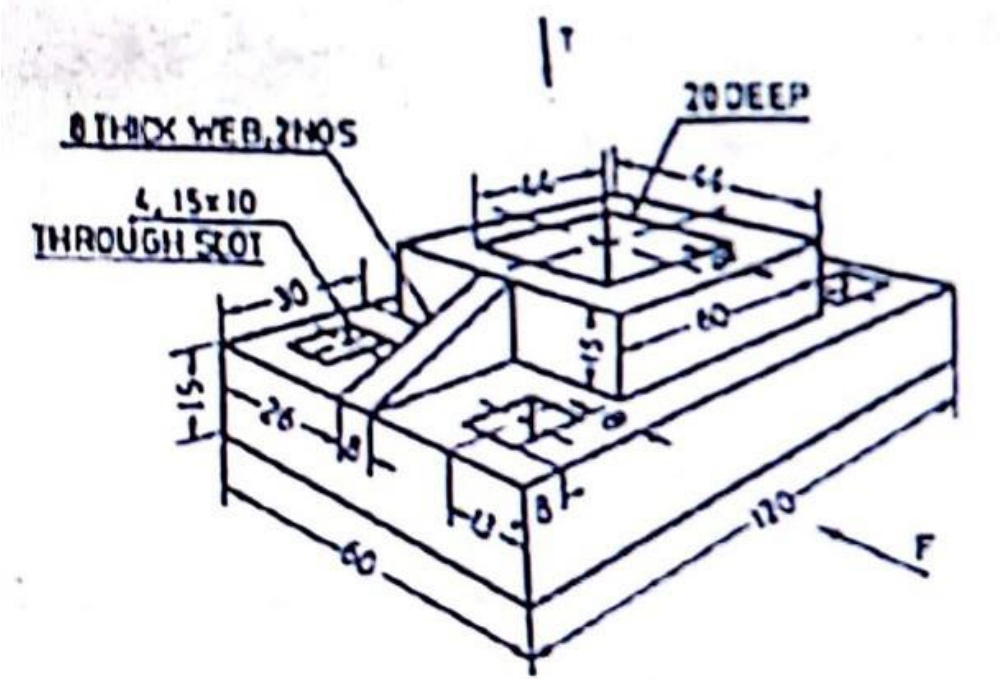

Q.2: Figure shown below gives the details of a RAMS BOTTOM SAFETY VALVE. Draw the following assembled views.

(a) Elevation (Right half in section) [20]

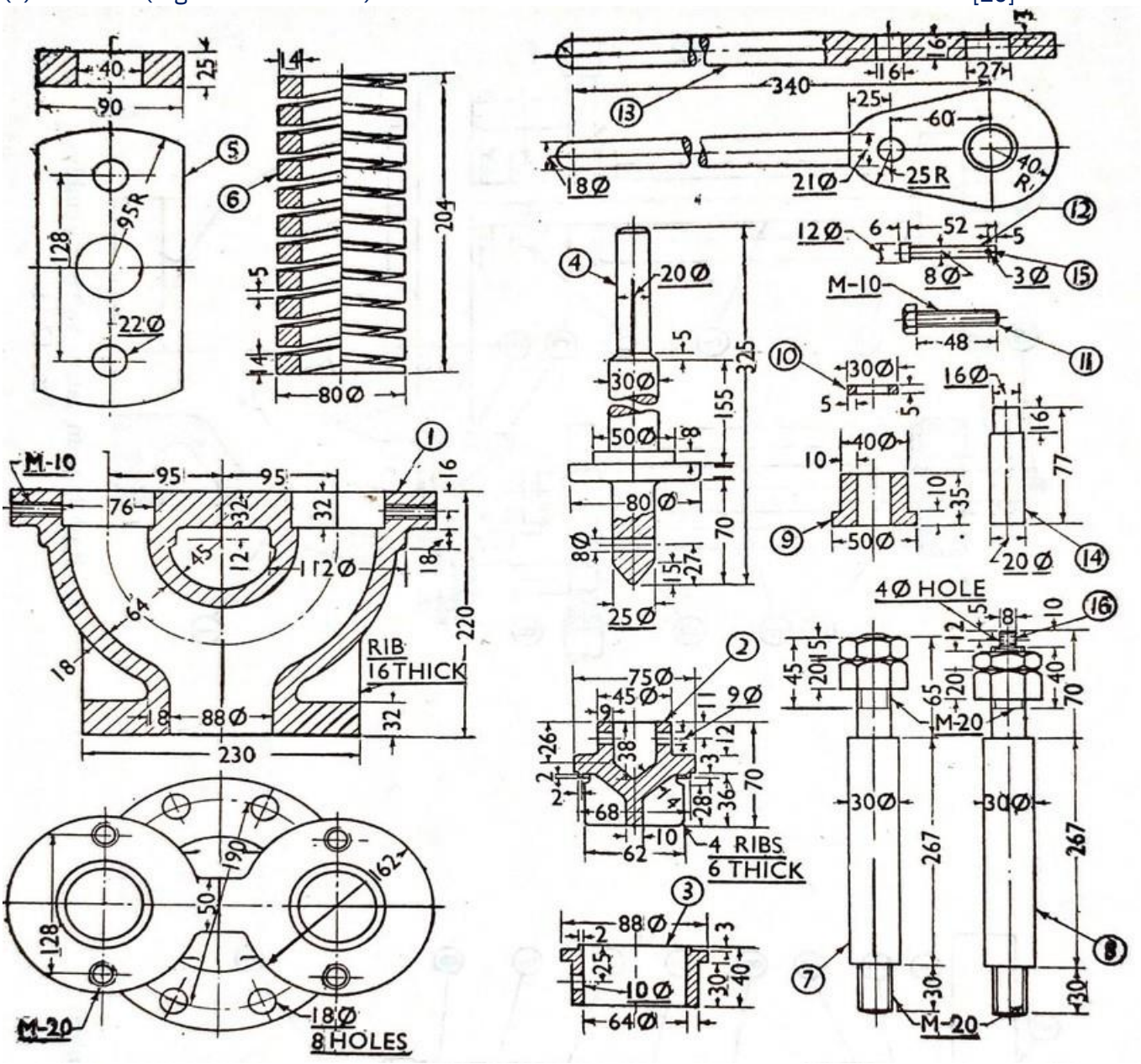

[2x5=10]

PART C

Q.1: Draw schematic free hand sketch of any TWO of the following.

(a) Eye foundation bolt.

(b) Steam pipe expansion joint.

(c) Steam and water circuit of a coal fired boiler.

(d) Hole and shaft basis system.