STUDY MATERIAL FOR ELECTRICAL SUPERVISOR LICENSE EXAMS (DOMESTIC AND INDUSTRIAL)

Solved MCQs and Question Papers from State Electricity Board Exams for Supervisor License (Supervisor Certificate of Competency)

SUDESH K JAIN



Click to Buy
Amazon | Flipkart | Pothi Store

भारतीय मानक

क्रासलिंकड पॉलिथीलीन विद्युत रोधित थर्मोप्लास्टिक की खोल वाली केबल — विशिष्टि

भाग 2 3.3 कि.वा. से 33 कि.वा. तक की कार्यकारी वोल्टता के लिए

(दूसरा पुनरीक्षण)

Indian Standard

CROSSLINKED POLYETHYLENE INSULATED THERMOPLASTIC SHEATHED CABLES — SPECIFICATION

PART 2 FOR WORKING VOLTAGES FROM 3.3 kV UP TO AND INCLUDING 33 kV

(Second Revision)

ICS 29.060.20

© BIS 2011

B U R E A U O F I N D I A N S T A N D A R D S
MANAK BHAVAN, 9 BAHADUR SHAH ZAFAR MARG
NEW DELHI 110002

December 2011 **Price Group 7**

Power Cables Sectional Committee, ETD 09

FOREWORD

This Indian Standard (Part 2) (Second Revision) was adopted by the Bureau of Indian Standards, after the draft finalized by the Power Cables Sectional Committee had been approved by the Electrotechnical Division Council.

This standard was originally published in 1973 and subsequently revised in 1985. This revision has been undertaken to bring it in line with International practices. The following changes have been incorporated in this revision:

a) A special category cables with improved fire performance has been included in this standard. Classification has been given.
b) Strippability test for semi conducting insulation screen incorporated.
c) In insulation eccentricity and ovality has been included along with test method.
d) In outer sheath polyethylene material has been included.
e) Test voltages have been enhanced in line with IEC 60502-2.
f) Partial discharge test voltage has been increased to $1.73U_0$ from 1.5 U_0 and sensitivity has been enhanced in line with IEC 60502-2.

This standard is one of the series of Indian Standards on cross-linked polyethylene insulated thermoplastic sheathed cables. Other parts in the series are:

Part 1 For working voltage up to and including 1 100 V
Part 3 For working voltages from 66 kV up to and including 220 kV

Particular attention has been drawn to the limitations of the short circuit ratings of the types of cables covered by this standard owing to the absence of the metallic sheath and the possible loss of electrical contacts between the strands of armour as a result of corrosion or presence of compound between them or both. A separate standard about recommended short circuit ratings of these cables is under formulation.

Attention is also drawn to the fact that the current ratings of the types of cables covered by this standard are different from those of the paper insulated metal sheathed cables.

The correct type of cables should be selected for the system keeping in view whether the system is earth or unearthed.

NOTE — It should be realized that in an electric system where an earth fault is not automatically and promptly eliminated the extra stress on the insulation of the cables during the earth faults reduces the life of cables to a certain extent. Therefore if the system is expected to be operated quite often with prolonged earth fault it is advisable to select cables suitable for unearthed system.

In the formulation of this standard assistance has been derived from IEC 60502-2 (2005) 'Power cables with extruded insulation and their accessories for rated voltages from 1 kV up to 30 kV — Part 2: Cables for rated voltages from 6 kV up to 30 kV' issued by the International Electrotechnical Commission.

For the purpose of deciding whether a particular requirement of this standard is complied with the final value observed or calculated expressing the result of the test shall be rounded off in accordance with IS 2 : 1960 'Rules for rounding off numerical values (*revised*)'. The number of significant places retained in the rounded off value should be the same as that of the specified value in this standard.

Indian Standard

CROSSLINKED POLYETHYLENE INSULATED THERMOPLASTIC SHEATHED CABLES — SPECIFICATION

PART 2 FOR WORKING VOLTAGES FROM 3.3 kV UP TO AND INCLUDING 33 kV

(Second Revision)

1 SCOPE

1.1 This standard (Part 2) covers the requirements of following categories of crosslinked polyethylene insulated and PVC sheathed or polyethylene sheathed cables for single phase or three phase (earthed or unearthed) systems for electricity supply purposes:

a) *Types of Cables*

1) Single-core unscreened, unarmoured (but non-magnetic metallic tape covered);
2) Single-core screened, unarmoured;
3) Single-core armoured (non-magnetic) screened or unscreened; and
4) Three-core armoured, screened or unscreened.

b) *Voltage Grade (U_o/U)*

1) *Earthed systems*: 1.9/3.3 kV, 3.8/6.6 kV, 6.35/11 kV, 12.7/22 kV and 19/33 kV.
2) *Unearthed system:* 3.3/3.3kV and 11/11kV.

NOTES

1 Cables of 6.35/11kV grade (earthed systems) are suitable for use on 6.6/6.6 kV and (unearthed system) also.

2 The cables conforming to this standard may be operated continuously at a power frequency voltage 10 percent higher than rated voltage.

3 Under rule 54 of the Indian Electricity Rules, 1956 in case of high voltage, the permissible variation of declared voltage at the point of commencement of supply is not to vary by more than 6 percent on the higher side or by more than 9 percent on the lower side,

4 Measures taken for achieving longitudinal water tightness shall be as agreed between the purchaser and the supplier.

1.2 These cables are suitable for use where sum of ambient temperature and temperature rise due to load results in conductor temperature not exceeding 90°C under normal operation and 250°C under short-circuit conditions.

1.3 Armoured cables up to 11 kV grade specified in this standard are suitable for use in mines also. However, for such cables, additional requirements have been included, wherever necessary (**4.1.1**, **17.5** and **21.2.1**).

1.4 This standard also covers cables with improved fire performance categories C1 and C2 as given in Annex A. For such cables additional requirements have been included, wherever necessary.

2 REFERENCES

The following standards contain provisions which, through reference in this text, constitute provisions of this standard. At the time of publication, the editions indicated were valid. All standards are subject to revision and parties to agreements based on this standard are encouraged to investigate the possibility of applying the most recent editions of the standards indicated below:

IS No.	*Title*
1885 (Part 32) : 1993/IEC 50-461 : 1984	Electrotechnical vocabulary: Part 32 Electric cables
3975 : 1999	Mild steel wires, formed wires and tapes for armouring of cables
4905 : 1968	Methods for random sampling
5831 : 1984	PVC insulation and sheath of electric cables
8130 : 1984	Conductors for insulated electric cables and flexible cords
10418 : 1982	Drums for electric cables
10462 (Part 1) : 1983	Fictitious calculation method for determination of dimensions of protective coverings of cables: Part 1 Elastomeric and thermoplastic insulated cables
10810	Methods of test for cables:
(Part 1) : 1984	Annealing test for wires used in conductors
(Part 2) : 1984	Tensile test for aluminium wires
(Part 3) : 1984	Wrapping test for aluminium wires
(Part 5) : 1984	Conductor resistance test
(Part 6) : 1984	Thickness of thermoplastic and elastomeric insulation and sheath
(Part 7) : 1984	Tensile strength and elongation at break of thermoplastic and elastomeric insulation and sheath

IS No.	*Title*
(Part 10) : 1984	Loss of mass test
(Part 11) : 1984	Thermal ageing in air
(Part 12) : 1984	Shrinkage test
(Part 14) : 1984	Heat shock test
(Part 15) : 1984	Hot deformation test
(Part 30) : 1984	Hot set test
(Part 32) : 1984	Carbon content test for polyethylene
(Part 33) : 1984	Water absorption test (gravimetric)
(Part 36) : 1984	Dimensions of armouring material
(Part 37) : 1984	Tensile strength and elongation at break of armouring materials
(Part 38) : 1984	Torsion test on galvanized steel wires for armouring
(Part 39) : 1984	Winding test on galvanized steel strips for armouring
(Part 40) : 1984	Uniformity of zinc coating on steel armour
(Part 41) : 1984	Mass of zinc coating on steel armour
(Part 42) : 1984	Resistivity test of armour wires and strips and conductance test of armour (wires/strips)
(Part 43) : 1984	Insulation resistance
(Part 45) : 1984	High voltage test
(Part 46) : 1984	Partial discharge test
(Part 47) : 1984	Impulse test
(Part 48) : 1984	Dielectric power factor test
(Part 49) : 1984	Heating cycle test
(Part 50) : 1984	Bending test
(Part 53) : 1984	Flammability test
(Part 58) : 1998	Oxygen index test
(Part 59) : 1988	Determination of the amount of halogen acid gas evolved during combustion of polymeric materials taken from cables
(Part 60) : 1988	Thermal stability of PVC insulation and sheath
(Part 61) : 1988	Flame retardant test
(Part 62) : 1993	Fire resistance test for bunched cables
(Part 64) : 2003	Measurement of temperature index

3 TERMINOLOGY

For the purpose of this standard, the following definitions in addition to those given in IS 1885 (Part 32) shall apply.

3.1 Routine Test — Test made by the manufacturer on all finished cable lengths to demonstrate the integrity of the cable.

3.2 Type Tests — Tests required to be made before supply on a general commercial basis a type of cable in order to demonstrate satisfactory performance characteristics to meet the intended application.

NOTE — These tests are of such a nature that after they have been made they need not be repeated unless changes are made in the cable materials or design which might change the performance characteristics.

3.3 Acceptance Tests — Tests carried out on samples taken from a lot for the purpose of acceptance of the lot.

3.4 Optional Tests — Special tests to be carried out, when required, by agreement between the purchaser and the supplier.

3.5 Earthed System — An electric system which fulfills any of the following conditions:

a) Neutral-point or the mid-point connection is earthed in such a manner that, even under fault conditions, the maximum voltage that can occur between any conductor and the earthed does not exceed 80 percent of the nominal system voltage; and

b) The neutral-point or the mid-point connection is not earthed but a protective device is installed which automatically cuts out any part of the system which accidentally becomes earthed within a duration of 1 min; or

c) In case of ac systems only, the neutral-point is earthed through an arc suppression coil with arrangement for isolation within 1 h of occurrence of the fault for the non-radial field cables and within 8 h for radial cables, provided that the total of such periods in a year does not exceed 125 h.

3.6 Unearthed Systems — An electric system which does not fulfill the requirement of the earthed systems (*see* **3.5**).

4 CONDUCTOR

4.1 The conductors shall be composed of plain copper or aluminium wires complying with IS 8130.

4.1.1 Mining cables to be used in gassy mines shall be of copper conductor only.

5 INSULATION

The insulation shall be of cross linked polyethylene conforming to the requirement given in Table 1.

6 SCREENING

6.1 The screening shall consist of one or more of the following, as specified:

a) Non-metallic semi-conducting tape,

b) Non-metallic semi-conducting compound, and

c) Non-magnetic metallic tape wire, strip or sheath.

NOTE — The semi-conducting tape and semi-conducting compound shall be suitable for the operating temperature of the cable and compatible with the insulating material.

Table 1 Properties of XLPE Insulation
(*Clause* 5)

Sl No.	Property	Requirements
(1)	(2)	(3)
i)	Tensile strength	12.5 N/mm², *Min*
ii)	Elongation at break	200 percent, *Min*
iii)	Ageing in air oven:	
	a) Treatment (Temperature	135 ± 3 °C
	Duration)	7 day
	b) Tensile strength variation	± 25 percent, *Max*
	c) Elongation variation	± 25 percent, *Max*
iv)	Hot set test	
	a) Treatment:	
	1) Temperature	200 ± 3 °C
	2) Time under load	15 min
	3) Mechinical stress	20 N/cm²
	b) Elongation under load	175 percent, *Max*
	c) Permanent elongation (set) after cooling	15 percent, *Max*
v)	Shrinkage:	
	a) Treatment (Temperature	130 ± 3 °C
	Duration):	1 h
	b) Shrinkage	4 percent, *Max*
vi)	Water absorption (Gravimetric):	
	a) Treatment (Temperature	85 ± 2 °C
	Duration)	14 days
	b) Water absorbed	1 mg/cm², *Max*
vii)	Volume resitivity	
	a) at 27 °C	1×10^{14} Ω cm, *Min*
	b) at 90 °C	1×10^{12} Ω cm, *Min*

6.1.1 *Non-metallic — Semiconducting Compound*

The material shall be bonded or strippable type conforming to the requirements given in Table 2. Unless otherwise specified it shall be bonded type.

Table 2 Properties of Extruded Semiconducting Screen

Sl No.	Property	Requirements
(1)	(2)	(3)
i)	Strippability test for strippable semiconducting insulation screen	Force required to remove semi-conducting screen from insulation without damaging shall be not less than 4 N or greater than 45 N before and after ageing when test as per Method of Test as per Annex B
ii)	Resistivity test for semiconducting screen:	Method of Test as per Annex E
	a) Conductor screen	1000 Ω m, *Max*
	b) Core screen	500 Ω m, *Max*

6.1.2 *Non-magnetic Metallic Tape for Single Core Unscreened and Unarmoured Cables*

Requirements for this tape shall be as agreed to between the purchaser and the manufacturer.

7 FILLERS AND INNER SHEATH

7.1 The fillers and inner sheath shall be of the following:

a) Vulcanized or unvulcanized rubber; and
b) Thermoplastic materials.

NOTE — Vulcanized or unvulcanized rubber or thermoplastic material used for inner sheath shall not be harder than XLPE compounds used for insulation and outer sheath respectively. Fillers and inner sheath materials shall be chosen to be compatible with the temperature rating of the cable and shall have no deleterious effect on any other component of the cable.

8 ARMOURING

8.1 Armouring shall be of the following:

a) Galvanized round steel wire, and
b) Galvanized formed wires, or
c) Any metallic non-magnetic wire/strip.

8.2 The galvanized steel wires/strip shall comply with the requirements of IS 3975. The requirements of non-magnetic material shall be as agreed to between the purchaser and the supplier.

9 OUTER SHEATH

The outer sheath shall be of polyvinyl chloride (PVC) or polyethylene conforming to the requirements of Type ST 2 of IS 5831 or Table 3 respectively.

NOTE — For Category C1 and C2 PVC Type ST 2 with suitable additives to be used to meet the requirements of **19.1.3** and **19.2.2**.

10 CONDUCTOR

10.1 The conductor shall be of stranded construction, size 25 mm^2 and above complying with Class 2 of IS 8130.

10.2 In case of 1.9/3.3kV cables, a protective barrier may be applied between the conductor and insulation at the discretion of the manufacturer such barrier, when used shall be compatible with insulating material and suitable for the operating temperature of the cable.

11 CONDUCTOR SCREENING

11.1 All cables rated above 1.9/3.3 kV shall be provided with conductor screening. Conductor screening shall be provided over the conductor by extrusion of semi-conducting compound or a combination of non-metallic semi conducting tape and extrusion of semi conducting compound.

12 INSULATION

12.1 The conductor (with protective barrier or screen, where applied) shall be provided with cross linked polyethylene insulation applied by extrusion.

Table 3 Properties of Thermoplastic Polyethylene Sheath
(*Clause* 9)

Sl No.	Property	Requirements
(1)	(2)	(3)
i)	Without aging	
	a) Tensile strength (N/mm²)	12.5 N/mm², *Min*
	b) Elongation at break	300 percent, *Min*
ii)	Ageing in air oven:	
	a) Treatment — Temperature	110 ± 2 °C
	Treatment — Duration	7 days
	b) Elongation at break	300 percent, *Min*
iii)	Carbon black content	2.5 ± 0.5 percent
iv)	Hot deformation test	
	110 ± 2 °C for 6 h	
	Maximum depth of indentation	50 percent

12.2 Thickness of Insulation

The average thickness of insulation shall be not less than the nominal value (t_i) specified in Table 4

12.3 Tolerance on Thickness of Insulation

The smallest of measured values of thickness of insulation shall not fall below the nominal value (t_i) specified in Table 4 by more than 0.1 mm + 0.1 t_i.

12.4 Eccentricity and Ovality

Eccentricity of insulation shall not exceed 15 percent when tested as per Annex A.

12.5 Application of Insulation

The insulation shall be so applied that it fits closely on the conductor (or conductor screening or barrier if any) and it shall be possible to remove it without damaging the conductor.

13 INSULATION SCREENING

13.1 All cables rated above 1.9/3.3 kV shall be provided with insulation screening.

13.2 The insulation screening shall consist of two parts; namely, metallic and non-metallic.

13.3 Non-metallic part shall be applied directly over the insulation of each core and shall consist of either extruded semi-conducting compound or a combination of semi-conducting tape and extruded semi-conducting compound. The test method for strippability test for strippable semi-conducting insulation screen is given in Annex B. Semi-conducting water swell-able tapes if used shall be as agreed between the purchaser and the supplier.

13.4 Metallic part shall consist of either tape, or braid, or concentric serving of wires or a combination of wires and tapes or a sheath shall be non-magnetic and shall be applied over the non-metallic part. For single-core armoured cables, the armouring may constitute the metallic part of the screening.

Table 4 Nominal Thickness of Insulation
(*Clauses* 12.2 *and* 12.3)

Sl No.	Nominal Area of Conductor	Nominal Thickness of Insulation (t_1)						
		1.9/3.3 kV and 3.3/3.3 kV		3.8/6.6 kV	6.35/11 kV	11/11 kV	12.7/22 kV	19/33kV
		Single Core Armoured Cables	Single Core Unarmoured and Three Core Cables					
	mm^2	mm	mm	mm	mm	mm	mm	mm
(1)	(2)	(3)	(4)	(5)	(6)	(7)	(8)	(9)
i)	25	2.5	2.2	2.8	3.6	5.5	6.0	8.8
ii)	35	2.5	2.2	2.8	3.6	5.5	6.0	8.8
iii)	50	2.5	2.2	2.8	3.6	5.5	6.0	8.8
iv)	70	2.5	2.2	2.8	3.6	5.5	6.0	8.8
v)	95	2.5	2.2	2.8	3.6	5.5	6.0	8.8
vi)	120	2.5	2.2	2.8	3.6	5.5	6.0	8.8
vii)	150	2.5	2.2	2.8	3.6	5.5	6.0	8.8
viii)	185	2.5	2.2	2.8	3.6	5.5	6.0	8.8
ix)	240	2.5	2.2	2.8	3.6	5.5	6.0	8.8
x)	300	2.5	2.2	3.0	3.6	5.5	6.0	8.8
xi)	400	2.6	2.2	3.3	3.6	5.5	6.0	8.8
xii)	500	2.8	2.4	3.5	3.6	5.5	6.0	8.8
xiii)	630	3.0	2.6	3.5	3.6	5.5	6.0	8.8
xiv)	800	3.3	2.8	3.5	3.6	5.5	6.0	8.8
xv)	1 000	3.5	3.0	3.6	3.6	5.5	6.0	8.8

14 CORE IDENTIFICATION

14.1 Core identification for three core cables shall be as follows:

Voltage Grade kV	*Method of Identification*
1.9/3.3 and 3.3/3.3	a) Different colouring of XLPE insulation, or b) Coloured strips applied on the cores, or c) By numerals (1, 2, 3,) either by applying numbered strips or by printing on the cores. NOTE — It is permissible to apply the strips above the insulation screen
3.8/6.6, 6.35/11, 11/11, 12.7/22 and 19/33 kV	a) Coloured strips applied on the cores, or b) By numerals (1, 2, 3…) either by applying numbered strips or by printing on the cores

14.1.1 For identification by using coloured strips, red, yellow and blue colours respectively shall be used to identify phase conductors.

15 LAYING UP OF CORES

15.1 In three core cables, the cores shall be laid together with a suitable right hand lay. Where necessary the interstices shall be filled with non-hygroscopic material.

16 INNER SHEATH (COMMON COVERING)

16.1 The laid up cores shall be provided with inner sheath applied either by extrusion or by wrapping. It shall be ensured that the shape is as circular as possible.

16.2 The inner sheath shall be so applied that it fits closely on the laid up cores and it shall be possible to remove it without damage to the insulation.

16.2.1 In case of single core cables where there are both metallic screening and armouring there shall be extruded inner sheath between them.

16.3 Thickness of Inner Sheath

The thickness of inner sheath (common covering) shall be as given in Table 5 single core cables except those specified on **15.2.1** shall have no inner sheath.

16.3.1 When one or more layers of binder tapes are applied over the laid up cores, the thickness of the tapes shall not be construed as a part of the inner sheath.

17 ARMOURING

17.1 Application

Armouring shall be applied over the insulation or protective barrier or non-metallic part of insulation screening, if any in case of single core cables or over inner sheath in case of screened and armoured single core cables and over inner sheath in case of three cores cables.

Table 5 Thickness of Inner Sheath
(*Clause* 16.3)

All dimensions in millimetres.

Sl No.	Calculated Diameter Over Laid Up Cores, Ref to IS 10462 (Part 1)		Thickness of Inner Sheath *Min*
	Over	Up to and Including	
(1)	(2)	(3)	(4)
i)	—	25	0.3
ii)	25	35	0.4
iii)	35	45	0.5
iv)	45	55	0.6
v)	55	—	0.7

17.1.1 The armour wires/formed wires shall be applied as closely as practicable.

17.1.2 The direction of lay of armour shall be left hand for double wires/formed wires armoured cable this requirement shall apply to the inner layer of wires/ formed wires the outer layer shall, except in special cases be applied in the reverse direction to the inner layer, and there shall be a separator of suitable non-hygroscopic material: such as plastic tape bituminized Hessian cotton tape, rubber proofed tape between the inner and outer layers of armoured wires/formed wires.

17.1.3 A binder tape may be applied over the armour.

17.2 Types of Armour

Where the calculated diameter below armouring does not exceed 13 mm, the armour shall consist of galvanized round steel wires. The armour of cables having calculated diameter below armouring greater than 13 mm shall consist of either galvanized round steel wires or galvanized formed wires.

17.2.1 In case of single-core cables for ac system, the armouring shall be of non-magnetic material.

17.3 Dimensions

The dimension of galvanized steel wire or formed wires shall be as specified in Table 6.

17.4 Joints

The joints in armour wires or formed wires shall be made by brazing or welding and the surface irregularities shall be removed. A joint in any wires/ formed wires shall be at least 300 mm from the nearest

Table 6 Dimensions of Armour — Round Wires and Formed Wires
(*Clause* 17.3)

All dimensions in millimetres.

Sl No.	Calculated Diameter Under Armour [IS 10462 (Part 1)]		Nominal Thickness of Steel Strip	Nominal Diameter of Round Wire
	Over	Up to and Including		
(1)	(2)	(3)	(4)	(5)
i)	For all diameter in excess of 13 or		0.8	—
ii)		13	—	1.4
b)	13	25	0.8	1.6
c)	25	40	0.8	2.0
d)	40	55	1.4	2.5
e)	55	70	1.4	3.15
f)	70	—	1.4	4.0

NOTE — (i) and (ii) indicate two methods of practice in the application of armouring.

joint in any other armoured wire/formed wires in the completed cable.

17.5 Resistance

In case of cable for use in mines the resistance of armoured shall be not exceed that of conductor as specified in IS 8130 by more than 33 percent. To satisfy this, substitution of the galvanized steel wires/ formed wires in armour by required number of tinned copper wires/formed wires is permissible.

18 OUTER SHEATH

18.1 The outer sheath shall be applied by extrusion. It shall be applied:

a) Over the non-magnetic metallic tape covering. The insulation or over The non-magnetic metallic part of insulation screening in case of un-armoured single core cables, and

b) Over the armouring in case of armoured cables.

18.2 Colour of outer sheath shall be black or any other colour as agreed to between the purchaser and the supplier.

18.3 Thickness of Outer Sheath

18.3.1 *Unarmoured Cables*

The thickness of outer sheath of unarmoured cables determined by taking the average of a number of measurements shall be not less than the nominal value specified in col 3 of Table 7 and the smallest of the measured values shall not fall below the nominal value specified in col 4 of Table 7.

18.3.2 *Armoured Cables*

The thickness of outer sheath shall not be less than the minimum value specified in col 5 of Table 7.

Table 7 Thickness of Outer Sheath
(*Clauses* 18.3.1 *and* 18.3.2)

All dimensions in millimetres.

Sl No.	Calculated Diameter Under the Outer Sheath [IS 1S462 (Part 1)]		Thickness of Outer Sheath for Unarmoured Cables		Minimum Thickness of Outer Sheath for Armoured Cables
	Over	Up to and Including	Nominal (t_s)	Minimum	
(1)	(2)	(3)	(4)	(5)	(6)
i)	—	15	1.8	1.24	1.24
ii)	15	25	2.0	1.4	1.4
iii)	25	35	2.2	1.56	1.56
iv)	35	40	2.4	1.72	1.72
v)	40	45	2.6	1.88	1.88
vi)	45	50	2.8	2.04	2.04
vii)	50	55	3.0	2.2	2.2
viii)	55	60	3.2	2.36	2.36
ix)	60	65	3.4	2.52	2.52
x)	65	70	3.6	2.68	2.68
xi)	70	75	3.8	2.84	2.84
xii)	75	—	4.0	3.0	3.0

19 CLASSIFICATION OF TESTS

19.1 Type Tests

The following shall constitute type tests:

19.1.1 Test (viii), (x), (xii) and (xiii), are applicable only to screened cables.

19.1.2 With the exception and provision of **19.1.1** the following tests on screened cable shall be performed

Sl No.	*Test*	*For Requirements, Ref to*	*Method of Test, Ref to IS 10810*
(1)	(2)	(3)	(4)
i)	Test on conductor:		
	a) Annealing test (for copper)	IS 8130	1
	b) Tensile test (for aluminium)	IS 8130	2
	c) Wrapping test (for aluminium)	IS 8130	3
	d) Resistance test	IS 8130	5
ii)	Test for armouring wires/formed wires	Clause **7**, Table 6 and IS 3975	36-42
iii)	Physical test for insulation:		
	a) Tensile strength and elongation at break	Table 1	7
	b) Ageing in air oven	Table 1	11
	c) Degree of cross linking		
	d) Hot set test	Table 1	30
	e) Shrinkage test	Table 1	12
	f) Water absorption test (gravimetric)	Table 1	33
iv)	Test for thickness of insulation (eccentricity) and sheath	Clause **11**, Tables 4, 5 and 7 and Annex A	6
v)	Test on extruded semi conducting screens		
	a) Test for strippability of semiconducting strippable insulation screen (when applicable)	Table 2 and Annex B	
	b) Volume resistivity	Table 2 and Annex E	
vi)	Physical test for outer sheath:		
	a) Tensile strength and elongation at break	IS 5831 or Table 3	7
	b) Ageing in air oven	IS 5831 or Table 3	11
	c) Shrinkage test	IS 5831	12
	d) Hot deformation	IS 5831 or Table 3	15
	e) Loss of mass in air oven	IS 5831	10
	f) Heat shock	IS 5831	14
	g) Thermal stability	IS 5831	60
	h) Carbon black content of polythene sheath	Table 3	32 or any other thermo analytic method (by thermo gravimetric analysis)
vii)	Thermal ageing test for complete cable	**19.9**	see **19.9**
viii)	Partial discharge test	**19.2**	46
ix)	Bending test	**19.3**	50
x)	Dielectric power factor test:	**19.4**	48
	a) As a function of voltage		
	b) As a function of temperature		
xi)	Insulation resistance (volume resistivity) test	Table 1	43
xii)	Heat cycle test	**19.5**	49
xiii)	Impulse withstand test	**19.6**	47
xiv)	High voltage test	**19.7**	45
xv)	Flammability test for PVC sheathed cables	**19.8**	53

successively on the same test sample of completed cable not less than 10 m in length between the test accessories:

a) Partial discharge test,
b) Bending test followed by partial discharge test,
c) Dielectric power factor as a function of voltage,
d) Dielectric power factor as a function of temperature,
e) Heating cycle test followed by dielectric power factor as a function of voltage and partial discharge tests,
f) Impulse withstand test, and
g) High voltage test.

19.1.2.1 If a sample fails in test (vii) one more sample shall be taken for this test preceded by tests (ii) and (v).

19.1.3 The following shall constitute additional type test for the cables with improved fire performance as per the Categories given in Annex C.

Category	*Test*	*For Requirement, Ref to Clause*	*Methods of Test, Ref to IS 10810*
(1)	(2)	(3)	(4)
01	No additional test	—	—
C1	a) Oxygen index	20.10	58
	b) Flame retardance test on single cables	20.11	61
	c) Flame retardance test on bunched cables	20.12	62
	d) Temperature index	20.15	64
C2	a) Oxygen index	20.10	58
	b) Flame retardance test on single cables	20.11	61
	c) Flame retardance test on bunched cables	20.12	62
	d) Smoke density test (on sheathing material)	20.14	under preparation
	e) Test for halogen acid gas evolution	20.13	59
	f) Temperature index	20.15	64

NOTES

1 For Category C1 tests (a) and (d) are to be performed on sample taken from the outer sheath, as applicable and prepared in the manner given in the relevant test methods .

2 For Category C2 test (a) , (e), and (f) are to be performed on samples taken from outer sheath , as applicable and prepared in the manner given in relevant test methods .

19.2 Acceptance Tests

The following shall constitute acceptance tests:

a) Annealing tests (for copper),
b) Tensile test (for aluminium),
c) Wrapping test (for aluminium),
d) Conductor resistance tests,
e) Test for thickness of insulation (eccentricity) and sheath,
f) Hot set test for insulation,
g) Tensile strength and elongation at break test for insulation and outer sheath,
h) Partial discharge test (for screened cables only),
j) High voltage test,
k) Insulation resistance (volume resistivity) test, and
m) Test for cross linking for extruded semi-conducting screen.

NOTE — Partial discharge test shall be carried out on full drum length.

19.2.1 A recommended sampling plan for acceptance test is given in Annex D.

19.2.2 The following shall constitute additional acceptance tests for cables with improved fire performance as per the categories given in Annex C.

Category	*Test*
01	No additional test
C1	a) Oxygen index
	b) Flame retardance test on single cable
	c) Flame retardance on bunched cables
C2	a) Oxygen index
	b) Flame retardance test on single cable
	c) Flame retardance test on bunched cables
	d) Test for halogen acid gas evolution
	e) Test for smoke density

19.3 Routine Tests

The following shall constitute routine tests:

a) Conductor resistance test,

b) Partial discharge test (for screened cables only),

c) High voltage test, and

d) Resistance test for armour (for mining cables) in accordance with IS 10810 (Part 42) and **17.5**.

NOTE — Partial discharge test shall be carried out on full drum length.

19.4 Optional Test

Cold impact test for outer sheath (*see* IS 5831).

20 DETAILS OF TESTS

20.1 General

Unless otherwise stated in this standard, the test shall be carried out in accordance with appropriate part of IS 10810, taking into account additional information given in this standard.

20.2 Partial Discharge Test

The partial discharge magnitude at test voltage equal to 1.73 U_o shall not exceed 10 pC for routine tests/ acceptance tests and 5pC for Type Tests.

20.3 Bending Test

The diameter of the test cylinder shall be $20D \pm 5$ percent where D is the overall diameter of the completed cable. After completing the bending operations, the test sample shall be subjected to partial discharge measurement and shall comply with the requirements given in **20.2**.

20.4 Dielectric Power Factor Test

20.4.1 *tan δ as a Function of Voltage*

The measured value of tan δ at U_o shall not exceed 0.004 and the increment of tan δ between 0.5 U_o and 2 U_o shall not be more than 0.002.

20.4.2 *tan δ as a Function of Temperature*

The measured value of tan δ *shall* not exceed 0.004 at ambient temperature and 0.008 at 5 °C to 10 °C above the maximum conductor temperature in normal operation.

20.5 Heating Cycle Test

The sample, which has been subjected to previous tests shall be laid out on the floor of the test room and heated by passing a current through the conductor, until the conductor reaches a steady temperature of 5°C to 10 °C above the maximum conductor temperature in normal operation.

For three core cables, the heating current shall be passed through all conductors.

The heating cycle shall be of atleast 8 h duration. The conductor temperature shall be maintained within the stated temperature limits for atleast 2 h of each heating period. This shall be followed by atleast 3 h of natural cooling in air to a conductor temperature within 10 K of ambient temperature.

NOTES

1 The cycle shall be carried out 20 times.

2 After twentieth cycle, the sample shall be subjected to dielectric power factor as a function of voltage **(20.4.1)** and partial discharge test **(***see* **20.2)**.

20.6 Impulse Withstand Test

Impulse voltage level shall be as given below:

Rated voltage, kV	3.8/6.6	6.35/11	11/11	12.7/22	19/33
Impulse voltage, kV	60	75	95	125	170

No breakdown of insulation shall occur during the test. The temperature of the conductor shall be at 5 °C to 10 °C above the maximum conductor temperature in normal operation.

20.7 High Voltage Test

20.7.1 *Type/Acceptance Test*

The cable shall withstand without breakdown an ac voltage equal to 4 U_o when applied to the sample between conductor and screen/metallic tape/armour (and between conductors in case of unscreened cable). the voltage shall be gradually increased to the specified value and maintained for a period of 4 h.

If while testing, interruption occurs during the 4 h period the test shall be prolonged to the same extent. If the interruption period exceeds 30 min, the tests shall be repeated.

20.7.2 *Routine Test*

The cables shall withstand without any failure, the test voltages given below, when applied for a period of five minutes for each test connection:

Voltage Grade kV	*Test Voltage*	
	Between Conductor and Screen/Armour kV (rms)	Between Conductor kV (rms)
1.9/3.3	10	10
3.8/6.6	13	
6.35/11	21	
11/11	35	
12.7/22	42	
19/33	63	

20.8 Flammability Test for PVC Sheathed Cables

Period of burning after removal of the flame shall not exceed 60 s and the unaffected (uncharred) portion from the lower edge of the top clamp shall be at least 50 mm.

20.9 Thermal Ageing Test for Complete Cable

This test shall be carried out to check that the insulation, non-metallic sheath and extruded semi-conducting layer over the conductor and insulation are not liable to deteriorate in operation due to contact with other components in the cable.

Three pieces of complete cable about 200 mm long shall be suspended vertically and substantially in the center of the oven at least 20 mm away from each other and shall not occupy more than 2 percent of the volume of the oven. The pieces of cables shall be kept in the oven at the temperature of 10 ± 2°C above the rated maximum normal operating conductor temperature of the cable for duration of 168 h.

The test piece of insulation and sheath from the aged piece of the cable shall be prepared and subjected to tensile strength and elongation at break.

The resistivity of the extruded semi-conducting layers shall be determined on the test piece from the aged cable sample in accordance with Annex E.

The resistivity of semi conducting screen layers measured as per Annex E shall not exceed the following values:

a) Conductor screen : 1 000 Ω. m
b) Insulation screen : 500 Ω. m

20.9.1 The test results for the tensile strength and elongation at break shall comply with the values of insulation and sheath after ageing as given in Table 1 for insulation and IS 5831 for PVC outer sheath and Table 3 for thermoplastic polyethylene outer sheath.

20.10 Oxygen Index Test

The test on samples of outer sheath shall be done at 27 ± 2°C or ambient. The oxygen index shall not be less than 29.

20.11 Flame Retardance Test on Single Cables (for overall diameter ≤ 35 mm)

After the test, there should be no visible damages on the test specimen within 300 mm from its upper end. Mark from fixing devices, soot or changing of the colour are not considered damages.

20.12 Flame Retardance Test on Bunched Cables

After burning has ceased, the cables should be wiped clean and charred or affected portion should not have reached a height exceeding 2.5 m above the bottom edge of the burner, measured at the front and rear of the cable assembly.

NOTE — Requirements for this test are split in 3 categories that is A, B and C as described in IS 10810 (Part 62). For the purpose of this standard, category B and C test method shall be used. In the absence of any special requirements for method B, method C shall be used for both categories C1 and C2.

20.13 Test for Halogen Acid Gas Evolution

The level of HCl evolved shall not exceed 20 percent by weight.

20.14 Test for Smoke Density

Smoke density rating shall be 60 maximum.

20.15 Test for Temperature Index

The extrapolated values of temperature at which oxygen index is 21 shall be minimum 250°C.

21 IDENTIFICATION

21.1 Manufacturer's Identification

The manufacturer shall be identified throughout the length of cable by manufacturers name or trade-mark and the voltage grade and year of manufacture indented, printed or embossed or by means of a tape bearing this information. the indentation, printing or embossing shall be done only on the outer sheath.

For manufacturers' name, if none of these methods is employed or if the purchaser so desires, colour identification threads in accordance with a scheme to be approved by the Indian Standard insulation shall be employed.

21.2 Cable Identification

21.2.1 In case of cables intended for use in mines, the word 'Mining' shall be indented, printed or embossed on the outer sheath throughout the length of the cable.

21.2.2 The special cables with improved fire performance for Category C1 and C2 shall be identified by indenting, embossing or printing the appropriate legend on the outer sheath throughout the cable length in addition to the existing marking requirements.

	Type of Cable	*Legend*
a)	Improved fire performance or Category C1	FR
b)	Improved fire performance or Category C2	FR-LSH

21.3 Cable Code

The following code shall be used for designating the cable:

Sl No.	*Constitute*	*Code Letter*
i)	Aluminium conductor	A
ii)	XLPE insulation	2X
iii)	Steel round wire armour	W
iv)	Non-magnetic round wire armour	Wa
v)	Steel strip armour	F
vi)	Non-magnetic strip armour	Fa
vii)	Double steel round wire armour	WW
viii)	Double steel strip armour	FF
ix)	PVC outer sheath	Y
x)	Polyethylene outer sheath	2Y

NOTE — No code letter for conductor is required when the conductor material is copper.

22 PACKING AND MARKING

22.1 The cable shall be wound on a drum either wooden (*see* IS 10418) or steel and packed. The ends of the cable shall be sealed by of non-hygroscopic sealing material.

22.2 The cable shall carry the following information either stenciled on the drum or contained in a label attached to it:

a) Reference to this Indian Standard, for example, *see* IS 7098 (Part 2);
b) Manufacturer's name or trade-mark;
c) Type of cable and voltage grade;
d) Number of cores;
e) Nominal cross-sectional area of conductor;
f) Cable code;
g) Length of cable on the drum;
h) Number of lengths on the drum (if more than one);
j) Direction of rotation of drum (by means of an arrow);
k) Gross mass;
m) Country of manufacture; and
n) Year of manufacture.

22.2.1 *BIS Certification Marking*

The cable (drum or label) may also be marked with the Standard Mark.

22.2.1.1 The use of the Standard Mark is governed by the provisions of the *Bureau of Indian Standards Act*, 1986 and the Rules and Regulations made there under. The details of conditions under which the Iicence for the use of the Standard Mark may be granted to manufacturers or producers maybe obtained from the Bureau of Indian Standards.

ANNEX A

(*Clauses* 1.4 *and* 12.4)

TEST METHODS FOR ECCENTRICITY AND OVALITY

A-1 TEST METHOD FOR ECCENTRICITY

The eccentricity of the insulation shall be checked as follows:

$$\text{Percent eccentricity} = \frac{t_{\text{Max}} - t_{\text{Min}}}{t_{\text{Max}}} \times 100$$

where t stands for the thickness of insulation.

A-2 TEST METHOD FOR OVALITY

The ovality of the core shall be checked as follows:

$$\text{Percent ovality} = \frac{d_{\text{core Max}} - d_{\text{core Min}}}{d_{\text{core Max}}} \times 100$$

where d stands for the diameter of the core.

ANNEX B

(*Clause* 13.3)

STRIPPABILITY TEST FOR STRIPPABLE SEMICONDUCTING INSULATION SCREEN

B-1 This test shall be carried out when extruded semiconducting insulation screen is strippable.

The test shall be performed three times on both unaged and aged samples, using either three separate pieces of cable or one piece of cable at three positions around the circumstance, spaced at approximately 120°C

Core lengths of atleast 250 mm shall be taken from the cable to be tested, before and after being aged according to 20.9.

Two cuts shall be made in the extruded semiconducting insulation screen of each sample, longitudinally from end to end and radially down to the insulation, the cuts being (10 ± 1) mm apart and parallel to each other.

After removing approximately 50 mm length of the 10 mm strip by pulling it in a direction parallel to the core (that is, a stripping angle of approximately 180°C), the core shall be mounted vertically in a tensile machine with one end of the core held in one grip and the 10 mm strip in the other.

The force to separate the 10 mm strip from the insulation, removing a length of atleast 100 mm, shall be measured at a stripping angle of approximately 180 °C. Using a pulling speed of 250 ± 50 mm/min.

The test shall be carried out at a temperature of 27 ± 5 °C.

For unaged and aged samples, the stripping force values shall be continuously recorded.

The insulation surface shall not be damaged and no trace of the semiconducting screen shall remain on the insulation.

ANNEX C

(*Clauses* 19.1.3 *and* 19.2.2)

CATEGORIES OF CABLES WITH IMPROVED FIRE PERFORMANCE

Category	*Environment Description*	*Type*	*Cable Description*
01	Cables in open areas	—	Flame retardant, single cable self extinguishing, does not propagate fire
C1	Cables in constrained area	FR	Flame retardant, does not propagate fire even when installed in groups in vertical ducts
C2	Cables in constrained area with limited human activities and/or presence of sophisticated system	FR-LSH	Flame retardant cables with reduced halogen evolution and smoke

ANNEX D

(*Clause* 19.2.1)

SAMPLING OF CABLES

D-1 LOT

D-1.1 In any consignment the cables of the same size manufactured under essentially similar conditions of production shall be grouped together to constitute a lot.

D-2 SCALE OF SAMPLING

D-2.1 Samples shall be taken and tested from each lot for ascertaining the conformity of the lot of the standard.

D-2.2 The number of samples to be selected shall be as given below:

Sl No.	*No. of Drums in a Lot*	*No. of Drums to be taken as Sample*	*Permissible No. of Defective*
(1)	(2)	(3)	(4)
i)	Up to 25	3	0
ii)	26 to 50	5	0
iii)	51 to 100	8	0
iv)	101 to 300	13	1
v)	301 and above	20	1

D-2.2.1 These samples shall be taken at random. In order to ensure the randomness of selection, procedure given in IS 4905 may be followed.

D-3 NUMBER OF TESTS AND CRITERION FOR CONFORMITY

D-3.1 From each of the drums selected, suitable lengths of test samples shall be taken. These test samples shall be subjected to each of the acceptance tests (*see* **19.2**). A test sample is called defective if it fails in any one of the acceptance tests. If the number of defectives is less than or equal to the corresponding permissible number given in **D-2.2**, the lot shall be declared as conforming to the requirements of acceptance tests otherwise not.

ANNEX E

(*Clause* 20.9)

METHOD OF MEASURING RESISTIVITY OF SEMICONDUCTING SCREEN

E-1 Each test piece shall be prepared from a 150 mm sample of complete cable.

The conductor screen test piece shall be prepared by cutting a sample of core in half longitudinally and removing the conductor and separator, if any. The insulation screen test piece shall be prepared by removing all the covering from the sample of the core.

The procedure for determining the volume resistivity of screen shall be as follows:

Four silver plated electrodes *A*, *B*, *C* and *D* (*see* Fig. 1) shall be applied to the semi-conducting surfaces. The potential electrodes B and C shall be 50 mm apart and the two current electrodes A and D shall be each placed at least 25 mm beyond the potential electrodes.

Connection shall be made to the electrodes by means of suitable clips. In making connections to the conductor screen electrodes, it shall be ensured that the clips are insulated from the insulation screen on the outer surface of the test sample.

The assembly shall be placed in an above preheated to the specified temperature and, after an interval of at least 30 min, the resistance between the electrodes shall be measured by means of circuit, the power of which shall not exceed 100 mW.

After the electrical measurements, the diameters over the conductor screen and insulation screen and the thicknesses of the conductor screen and insulation screen shall be measured at ambient temperature, each being the average of six measurements made on the sample shown in Fig. 1.

The volume resistivity ρ in Ω m shall be calculated as follows:

a) Conductor screen

$$\rho_c = \frac{R_c \times \pi \times (D_c - T_c) \times T_c}{2L_c}$$

where

ρ_c = volume resistivity, in Ω m;
R_c = measured resistance, in Ω;
D_c = outer diameter over the conductor screen, in m;
L_c = distance between potential electrodes, in m; and
T_c = average thickness of conductor screen, in m.

b) Insulation screen

$$\rho_i = \frac{R_i \times \pi \times (D_i + T_i) \times T_i}{L_i}$$

where

ρ_i = volume resistivity, in Ω m;

R_i = measured resistance, in Ω;

D_i = outer diameter over the insulation screen, in m;

L_i = distance between potential electrodes, in m; and

T_i = average thickness of insulation screen, in m.

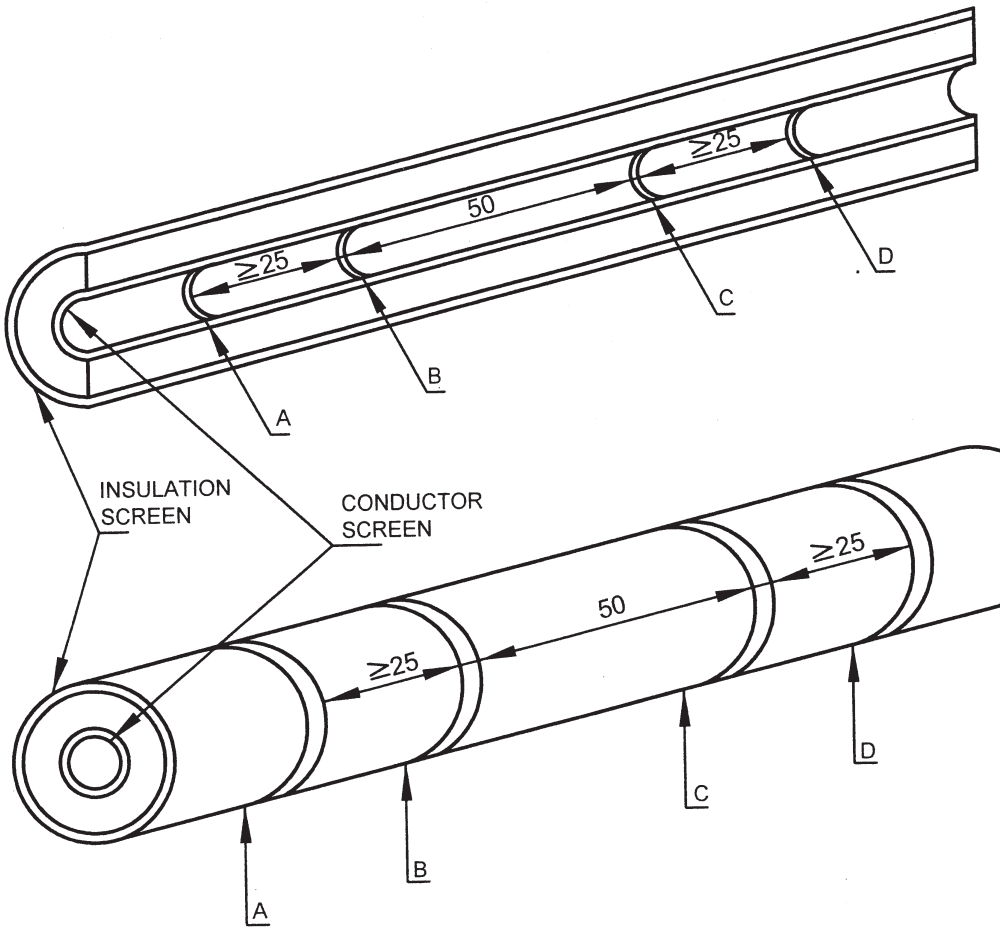

B, *C* = Potential electrodes
A, *D* = Current electrodes

All dimensions in millimetres.

FIG. 1

Bureau of Indian Standards

BIS is a statutory institution established under the *Bureau of Indian Standards Act*, 1986 to promote harmonious development of the activities of standardization, marking and quality certification of goods and attending to connected matters in the country.

Copyright

BIS has the copyright of all its publications. No part of these publications may be reproduced in any form without the prior permission in writing of BIS. This does not preclude the free use, in the course of implementing the standard, of necessary details, such as symbols and sizes, type or grade designations. Enquiries relating to copyright be addressed to the Director (Publications), BIS.

Review of Indian Standards

Amendments are issued to standards as the need arises on the basis of comments. Standards are also reviewed periodically; a standard along with amendments is reaffirmed when such review indicates that no changes are needed; if the review indicates that changes are needed, it is taken up for revision. Users of Indian Standards should ascertain that they are in possession of the latest amendments or edition by referring to the latest issue of 'BIS Catalogue' and 'Standards : Monthly Additions'.

This Indian Standard has been developed from Doc No.: ETD 09 (5795).

Amendments Issued Since Publication

Amend No.	Date of Issue	Text Affected

BUREAU OF INDIAN STANDARDS

Headquarters:

Manak Bhavan, 9 Bahadur Shah Zafar Marg, New Delhi 110 002
Telephones : 2323 0131, 2323 3375, 2323 9402 *Website*: www.bis.org.in

Regional Offices: *Telephones*

Central : Manak Bhavan, 9 Bahadur Shah Zafar Marg, NEW DELHI 110002 — 2323 7617, 2323 3841

Eastern : 1/14 C.I.T. Scheme VII M, V. I. P. Road, Kankurgachi, KOLKATA 700054 — 2337 8499, 2337 8561, 2337 8626, 2337 9120

Northern : SCO 335-336, Sector 34-A, CHANDIGARH 160022 — 60 3843, 60 9285

Southern : C.I.T. Campus, IV Cross Road, CHENNAI 600113 — 2254 1216, 2254 1442, 2254 2519, 2254 2315

Western : Manakalaya, E9 MIDC, Marol, Andheri (East), MUMBAI 400093 — 2832 9295, 2832 7858, 2832 7891, 2832 7892

Branches: AHMEDABAD. BANGALORE. BHOPAL. BHUBANESHWAR. COIMBATORE. DEHRADUN. FARIDABAD. GHAZIABAD. GUWAHATI. HYDERABAD. JAIPUR. KANPUR. LUCKNOW. NAGPUR. PARWANOO. PATNA. PUNE. RAJKOT. THIRUVANANTHAPURAM. VISAKHAPATNAM.

Published by BIS, New Delhi