STUDY MATERIAL FOR ELECTRICAL SUPERVISOR LICENSE EXAMS (DOMESTIC AND INDUSTRIAL)

Solved MCQs and Question Papers from State Electricity Board Exams for Supervisor License (Supervisor Certificate of Competency)

SUDESH K JAIN



Click to Buy
Amazon | Flipkart | Pothi Store

Indian Standard

CODE OF PRACTICE FOR INSTALLATION AND MAINTENANCE OF INDUCTION MOTORS

(Second Revision)

1 SCOPE

1.1 This standard covers installationand maintenance of three-phase induction motors **convered** by IS 325 : 1978 'Three-phase induction motors *(fourth revision)',* and equipment generally associated with such motors operating at voltages up to 11 **kV.**

1.2 Commutator motors and flameproof motors and their associated equipment are outside the scope of this standard.

2 REFERENCE STANDARDS

The Indian Standards listed in Annex A are necessary adjuncts to this standard.

3 TERMINOLOGY

3.0 For the purpose of this standard, the following definitions shall apply.

3.1 Induction Motor

An alternating-current motor without a commutator, in which one part only, either the rotor or the **stator,** is connected to the supply network, the other working **by** induction.

3.2 Slip-Ring Motor

An induction motor, the **stator** of which is fed by the supply network, the winding of the rotor being connected to slip-rings.

3.3 Squirrel-Cage **Motor**

An induction motor in which the rotor windings comprise bars in a laminated core with their ends short-circuited by end rings.

3.4 **Direct-on-Line Starting**

A method of starting, applicable to three phase squirrel-cage motors, **by connecting** the motor directly to the supply, the connections of the motor remaining the same as in the running position.

3.5 Star-Delta **Sturtiag**

A method ofstartingapplicable to three-phase squirrel cage motors connected in delta under normal working conditions; it consists in connecting the three-phases temporarily in star connection while starting.

3.6 **Auto-Transformer Startiug**

A method ofstartingapplicable to three-phase squirrel cage motor, by connecting the three-phases **tempo-**rarily through an auto-transformer so as to reduce the applied voltage at the time of starting.

3.7 Resistance Starting

A method of starting applicable mainly to slip-ring motors, whereby a variable resistance is inserted **in the** rotor circuit at starting which is gradually cut out. Sometimes, resistance is inserted in the statorcircuit of squirrel-cage motor to reduce the starting current to some desired value.

NOTE — The resistance in the rotor circuit is not necessarily in series with the rotor winding. In case of delta-connected rotor, resistance is in fact in parallel with the rotor winding.

3.8 Flameproof Enclosure

An enclosure for electrical machinery or apparatus that will withstand, when the **covers** or other access **doors** are properly **secured,** an internal **explosion of** the flammable gas or vapour which may enter or which may originate inside the enclosure, without **suffering** damage and without communicating the internal **flammation** (orexplosion) to the external flammable gas or vapour in which it is designed to be used, through any joints or other structural openings in the enclosure.

NOTE — The term 'flameproof' as used here is synonymous with the ter 'explosion-proof' as used in the USA or 'explosion proof type — d protection' used in Germany and other continental countries.

3.9 Circuit-Breaker

A mechanical switching device having two positions of rest and capable of making, carrying and breaking **currents under normal circuit conditions and also under** pre-determined conditions carrying for a given time and breaking currents under abnormal circuit conditions, such as those of short-circuit.

3.10 Starter

A device (or assembly of devices) designed for starting a motor or controlling an apparatus.

3.11 Controlling Device

A device to actuate the starter, such as a push button.

3.12 **Isolator (Disconnector)**

A device used to open (or close) a circuit when either negligible current is interrupted (or established), or when no significant change in the voltage across the terminals of each pole of the isolator occurs in the open position, it provides an isolating distance between the terminals of each pole.

NOTES

1 Negligible currents imply currents, such as the capacitance currents of bushings, busbars, connections, very short lengths of cables and currents of voltage transformers and devices. The manufacturer may give information concerning the ability of isolators to make and break small inductive and capacitive currents.

2 There are isolators whose fixed and moving contacts of each pole are not fixed on a common base or frame. In this case, special instructions for the erection may be necessary to secure the isolating distance.

3.13 Under-Voltage Release

A release which permits a mechanical switching device to open or close with without delay when the voltage across the terminals of the release falls below a pre-determined value.

3.14 Over-Current Release

A release which permits a mechanical switching device to open with or without delay when the current in the release exceeds a predetermined value.

3.15 Interlocking Device

A mechanical, electrical or other device which makes the operation of an apparatus dependent on the state or the position of one or more devices other than the controlled apparatus.

3.16 Medium Voltage

Any voltage normally exceeding 250 volts and not normally exceeding 650 volts.

4 EXCHANGE OF INFORMATION

4.1 The electrical engineer responsible for the installation of equipment covered by this code shall be informed, by the persons requiring the equipment, as to its exact duties and the location and conditions under which it is expected to operate. This information should, if possible, be exchanged before the construction of the building and before any electrical equipment is ordered, thus enabling the electrical engineer to detail any special building features required and to specify the most suitable type of equipment for the operational requirement involved.

4.2 Details of the electric supply available and of any special requirements regarding the ratings of equipment and the conditions under which the equipment may be connected to the supply should be ascertained from the supply authorities.

5 GENERAL REQUIREMENTS

5.1 Standard Specifications

This code applies primarily to motors covered by IS 325 : 1978. It also presupposes the use of control-gear and other associated equipment and connections complying with relevant Indian Standards or, where these are not available, with other approved standards.

5.2 Interchangeability

Where a number of similarly rated units are to be used, arrangements should preferably be made for such units to be interchangeable as regards essential dimensions, such as those affecting the fixing arrangement, space occupied, height to centre of shaft, distance from centre line of motor to the centre line of driving pulley, etc.

5.3 Compliance with Indian Electricity Rules and Other Regulations

5.3.1 All electrical installations shall be checked for compliance with the requirements of the current Indian Electricity Rules and Regulations made thereunder, together with any other regulations that may be applicable. It is recommended that the local authority concerned in the administration of the rules and regulations in the matter of the layout of the installation of medium voltage industrial motors and their control-gear be consulted to ensure that the requirements under the rules and regulations are complied with.

5.3.2 The electrical installation shall be carried out by persons competent to undertake such work under the regulations that may be in force in different states.

5.3.3 *Earth Connection*

The frame of every motor and its associated control-gear shall be earthed by two separate and distinct connections with earth through an earth electrode. Where practicable, the earth connections should be visible for periodical inspection.

5.3.3.1 Earthing shall be done in accordance with IS 732 (Part 2) : 1983.

5.3.3.2 Reference is also invited to IS 3043 : 1987 for earthing of equipment.

5.3.4 A suitable means of isolating the supply shall be placed near each and every motor, so that supply to the motor can be completely cut off by means of it, when required (*see also* **6.4**).

5.4 All wiring shall be done in accordance with IS 732 (Part 2) : 1983.

6 INSTALLATION DESIGN

6.1 General

The construction of all apparatus and conductors shall be such that operating temperatures of components do not exceed the safe figures laid down in the relevant Indian Standards having regard to the conditions in which the equipment is used. The equipment shall be installed, operated and maintained as to ensure that such safe temperatures are not exceeded.

6.2 Power-Factor Correction

Information on power-factor correction is given in Annex B.

6.3 Electrical Protection of Circuits and Apparatus

All apparatus and associated cable-work shall be

protected at the origin of the circuit against the effects of electrical faults in that circuit by a suitable automatic protective device. Such a protective device may be in the form of a circuit-breaker or fuse of adequate breaking capacity to deal with the effects of any likely alterations or extensions to the installation. Auxiliary light current circuits shall have separate fuses.

6.3.1 Where medium voltage wiring is enclosed in conduits, the ends of the conduits shall be securely fastened to the motor terminal box and to the terminal box of the controlgear and other switches used in connections therewith.

6.3.2 When the motor is mounted on slide rails, for adjustment of bolt tension, rigid conduit shall not be connected to the motor terminal box but flexible metallic conduit with approved adaptors shall be utilized for final connection to the motor, keeping good electrical and mechanical continuity throughout with metal-to-metal joint between solid conduit and flexible tube. The ends of the conduit shall be fitted with some suitable type of bushing to protect the insulation of the cable from damage.

6.4 Isolation of Equipment

Each motor and a group of motors and associated controlgear shall have means of disconnection to supply and such means shall be so placed as to be readily accessible from the position where danger may arise.

6.4.1 In cases where the driven machinery is of a dangerous character, such as grinding stones, saws, etc, and the normal means of control are of indirect nature (push-button), then, unless mechanical means for rapidly disconnecting the machinery from the driving motor are provided, isolation shall be effected by a switch arranged in such a way that the supply may be immediately interrupted; the switch shall be so placed as to be readily accessible from the position where danger may arise.

6.4.2 While making provision for isolation in accordance with **6.4** and **6.4.1** due regard should be paid to the necessity for isolating all control, pilot and interlocking circuits where these are derived from the main source of supply or independently. The principle to be observed is that any device which purports to isolate an installation should do so without exception. If it is not practicable to carry out complete isolation with a single device, clear instructions shall be affixed to the apparatus in a permanent manner setting out the procedure to secure complete isolation.

6.4.3 Additional precautions to be taken for isolation in the case of electrical equipment installed on machine tools shall be as mentioned in IS 1356 (Part 1) : 1972.

6.5 Emergency Supply

Where sudden failure of supply may cause danger or inconvenience, the desirability of installing an emergency supply should be considered. Such an emergency supply may be limited in capacity in accordance with the capacity of the minimum essential plant which has to be kept in operation. An automatic change-over panel may be provided for switching over to the emergency supply and back. Measures shall be taken to prevent paralleling of the normal and emergency supplies unless normal supply has been specifically designed and permitted by the supply authority for parallel operation with the emergency supply.

6.6 Types of Enclosures

This standard refers particularly to motors with types of enclosures specified in IS 325 : 1978 and the duty conditions generally associated with such enclosures in accordance with IS 12824 : 1989.

6.6.1 This standard may also be found useful in installing and maintaining motors in certain locations where other types of enclosures might be called for; brief information with respect to a few such applications is given under **6.6.1.1** to **6.6.1.3.**

6.6.1.1 *Flammable surroundings or explosive atmospheres*

Motors and controlgear for use under these conditions shall be of the certified flameproof types and those with suitable flameproof accessories shall be installed and maintained in flameproof condition *(see* **1.2**). Where, however, it is possible to install electrical apparatus in a position not exposed to flammable surroundings or an explosive atmoshpere, this course should be preferred and may find application where the drive from a motor can be transmitted to a machine through a gland in the wall separating the apparatus from the area of risk.

6.6.1.2 *Dusty atmoshperes*

In locations where dust or a similar product of a manufacturing process is liable to be present in such quantity, or is of such nature, that without special precautions it is likely to accumulate sufficiently to interfere with the normal operation of the equipment, the motors and associated apparatus shall be of the dust-proof or dust-tight type (*see* IS 4691 : 1985) as may be appropriate for the particular type of apparatus concerned.

6.6.1.3 *Damp or corrosive atmosphere*

Where motors are to run under damp conditions or exposed atmospheres it is desirable that the manufacturer be informed at the time of placing the order so that special precautions, like coating the windings with protective paint, may be taken. In certain circumstances, it may be practicable to resort to heating to maintain a temperature above the dew-point.

7 MOTOR CIRCUITS

7.0 Information on methods generally adopted for installation of wiring for two or more motors is contained in Annex C.

7.1 Cable Ratings

7.1.1 *General*

The maximum current that will flow under normal conditions of service in a motor circuit shall be taken as that corresponding to the full-load current of the motor when rated in accordance with the relevant current rating as given in IS *325 : 1978. The* size of cables used shall be capable of carrying the full-load currents corresponding to the rating of the motor.

7.1.2 *Overload Conditions*

The size of cables shall be so chosen as to take care of the starting or accelerating current and also the short-circuit current, where a starting or accelerating current in excess of the rated current has to be carried at frequent intervals.

7.13 *Rotor Circuit*

The maximum current that flows in the rotor circuit of a slip-ring motor under normal conditions of service shall be taken as that marked on the rating plate of the motor. The size of cables for such circuits shall be suitable for the maximum current, as mentioned under 7.1.1 except that where the motor is provided with slip-ring short-circuiting equipment the continuous rating of the rotor cables need only be half the current value marked on the rating plate. The rotor starter and rotor short-circuiting equipment shall be interlocked with the main switch.

7.1.4 Starting Conditions

7.1.4.1 Star-delta

With star-delta-connected motors, where six main connections are used behveen the controlgear and the motor, the maximum current tbat wiii fiow under normal conditions of service shall be taken as 58 percent of the current rating and the size of cables chosen shall be as stated under 7.1.1 and 7.12.

7.1.4.2 Resistance

The size of tbe cables shall be chosen in accordance with the requirements of the circuit, if a resistance *or* other current-limiting device is to be mounted separately from the starter or controller witb which it is used. If, however, the cables are in circuit only during starting, their continuous rating may be only half of the current rating as determined in 7.1.4.1.

7.15 It is recommended, therefore, that in tbe case of direct-on-line starting, the cable size be correlated with the starting current, particularly in the smaller sixes of cable with iow thermal capacity, and the cable size be selected such that the permissibk maximum temperature is not exceeded during starting.

NOTE — In the case of motors of sufficient size or importance to justify the installation of a circuit-breaker at the origin of the circuit, this difficulty may be overcome by the inclusion of an inverse or definite time lag device, according to the starting characteristics of the motor, designed to accommodate the starting current for the requisite period and an earth-leakage trip, to protect the cable against sustained earth fault conditions.

7.1.6 *Voltage Drop*

In motor circuits, the sizes of conductors shall be so chosen that the voltage at the terminals of the motor, when running under full load conditions, is not less than 95 percent of the declared voltage at the consumer's supply terminals. Furthermore, when the starting or accelerating current is considerably in excess of the full-load current, it may be necessary in order to ensure adequate starting and accelerating torque to consider the conductor sizes in relation to the voltage drop that may occur at the motor terminals when the excess current is flowing.

7.2 Starting Methods

72.1 *Squirrel-Cage Meters*

The principal methods of starting three-phase squirrel-cage motors are (a) direct-on-line, (b) start-delta, and (c) auto-transformer.

72.1.1 When using tk direct-on-line arrangement, the only controlgear is a switch or a circuit-breaker which serves to isolate the motor from the supply. Some starters have two positions for the operating handle, 'OFF' and 'ON' (or 'RUN', while others have three positions 'OFF', 'START' and 'RUN'. The 'START' position on the latter type cuts out the overload coils and this is the only difference between the two types of starters.

7.2.1.2 When using the two-position type of starter the handle should simply be moved smartly from 'OFF' to 'ON' (or 'RUN'). When using the three-position type of starter, tbe handle shall first be moved from 'OFF' to 'START' and the motor then be given time to run up to speed. As soon as the motor comes up to full speed, the handle should be moved smartly from the 'START' to the 'RUN' position.

72.12 If the motor fails to start when the starter handle is moved to the 'START position, the handle shall not be moved over to the 'RUN' position but shall immediately be returned to the 'OFF' position as otherwise damage may ensure to both motor and starter.

722 *Slip-Ring Motors*

Controlgear for slip-ring motors usually consists of a switch or a contactor or a circuit-breaker in the starter circuit and a variable resistance in the rotor circuit. When starting the motor, the handle of the short-circuiting gear, if such gear is fitted, shall be placed in the 'START position and the rotor resistance control handle should he in the 'OFF' or 'START' position. The stator switch or breaker shall then be closed and the rotor controller handle moved step by step to the 'ON' or 'RUN' position, pausing slightly on each stop to allow the motor to accelerate. When the controller handle has been moved to the last stop and the motor comesuptofuiispeed, the short-circuiting gear handle, if fitted, should then be moved to the 'RUN' position.

722.1 If the motor fails to start from rest as soon as the stator switch is put on or does not run up to full

speed within 30 seconds after the rotor controller handle is operated, the stator switch or breaker should be opened and the starter handle returned to the 'OFF position immediately.

7.2.2.2 Provision shall be made for an interlock between the starter and the circuit-breaker in the stator circuit so that the circuit-breaker may be switched on only when the full resistance of the starter is in the rotor circuit when starting.

7.3 **Protection**

The arrangement of a motor circuit and the type of its protection and control apparatus vary according to the size and duty of the motor, but the following safeguards should be observed in arranging the protective systems.

73.1 The system should provide protection against the current consumption becoming excessive due to overloading of the motor (see 8.6). The overload protective device should be such that it does not trip due to heavy normal starting current but affords full protection in case of sustained overload. It is recommended that anammeterofsuitable range be provided, preferably on the main circuit-breaker or starter. This would enable the load on the motor to be readily checked and preventive action taken in the case of overloads occurring on the driven machinery. On the larger sizes of motors, anammeter phase selection switch shall be an advantage as unequal loading of the phases due to unequal resistance in the rotor circuit caused by the bad connections, or single phasing, would be readily detected.

733 *Starting Current*

Where the starting current of a motor is of such a value, or the starting period so prolonged that the fuses used for the protection of the motor and motor circuit, if rated for normal running conditions would blow during starting, it may be necessary to install fuses of higherratingorofincreased time-delay characteristics or both. Such circumstances are particularly associated with the direct-on-line method of starting and, if cables rated only for full-load current are installed and the fuses at the origin of the circuit are set to accommodate the heavy starting and accelerating current, the cables may not be protected in accordance with their current rating. It is necessary, therefore, to select a fuse rating which having regard to the starting conditions, shall provide the narrowest tolerable margin below the fusing point. If the fuse ratings to be adopted are unavoidably higher than are necessary for full-load conditions, it may be necessary to increase the cross-sectional area of the cables in order that they may be adequately protected.

7.3.2.1 Where fuses are provided to protect the cables in a motor circuit as given under 7.3.2, the motor itself should preferably be protected by an overcurrent device on the starter. The device shall be so arranged as to afford sufficient timedelay for starting while providing adequate protection to the motor and the cable between the starter and the motor during normal running. Alternatively, the starter may be fitted with a changeover switch, the selective positions of which are connected to fuses or other overcurrent devices rated for the starting current and the running current respectively, so connected that the former are in circuit during starting and the latter during normal running conditions.

7.33' *Selection of Fuses*

If the fuses selected are too small, there is danger of one fuse blowing before the motor starter trips with consequent liability of damage to the motor due to operation on one phase open of the supply (single phasing) (see *also* 8.7). The rating of the fuse shall be co-related to the characteristics of all the connected equipment, like cables and motor control-gears. Reference is also invited to IS 10118 : 1982.

8 CONTROL OF MOTORS

8.1 Every motor shall be provided with efficient means of starting and stopping, which shall, if practicable, be within sight of a person at the motor, and shall be so arranged as to be easily operated by the person in control of the motor.

8.2 In every place in which a machine is driven by a motor, there shall be means at hand either for switching off the motor or stopping the machine.

83.1 In cases where machines are of dangerous character, a step push-button on the machine shall be inserted close to the operator to stop the machine in case of emergency.

8.3 Where danger may arise due to a motor being restarted without the consent of the person who, by operating a stop switch, caused it to be stopped, arrangements shall be made to prevent restarting of the motor until the stop switch involved has been reset; any such switch, therefore, shall not be of the self-resetting type.

8.4 Every motor shall be provided with a starter or other control device complying with relevant Indian Standard. The requirements of the supply authority, which may, in certain cases, permit direct-on-line starting without the need for any current-limiting device, shall be ascertained when the type of starter to be used is under consideration.

8.5 Where injury to persons or to machines or both may result from the automatic restarting of an electric motor on the restoration of the supply after an interruption, the motor starter shall be provided with a suitable device to prevent automatic restarting of the motor on restoration of the supply.

8.6 Every electric motor circuit should be provided with means of disconnecting the supply in the event of the current consumption becoming excessive owing to mechanical overloading of the motor. Generally speaking, this protection is necessary in addition to the protection given by means of circuit-breakers to the cable feeding the motor circuit. It may itself take the

form of a circuit-breaker, or may be a device acting in conjunction with the under-voltage release, and fitted on the starter.

8.7 Three-phase motors may be damaged or may give rise to fire risks iftheycontinue to runaftersupply to one phase has been interrupted. Adequate means should, therefore, be provided to ensure automatic disconnection of the remaining phases of the supply in such a contingency.

NOTE — This protection is provided for by the normal overcurrent trips. In the case. of delta-connected motors, these trips should preferably be connected within the interconnection of the delta winding.

8.8 Where a built-in thermal cut-out is fitted to a motor and the automatic restarting of the motor is attended by danger, the cut-out should incorporate a manually-operated resetting device.

8.9 When the motor is liable to start and stop repeatedly by the operation of protection devices, a suitable interlock to prevent reclosure shall be provided.

8.10 Push-Button Control Devices

'START' and 'STOP' push-buttons for normal control shall be adequately shrouded to prevent inadvertent operation. Push-buttons for emergency operations shall be so designed as to facilitate such operation.

8.11 **Electro-Mechanical** Brakes

Where electro-mechanical brakes are used, these shall normally be so arranged as to be applied mechanically and released electrically in order to provide for automatic operation in case of failure of electric supply. A hand-operated device shall, however, be provided to release the mechanical brake, in the case of motors for operating lifts, winders, etc, to bring the same to the landing or desired position should a sudden failure of electric supply occur.

8.12 **Rapid** Braking

Where extremely rapid braking is required, dynamic braking or a similar form of retardation may be preferable to mechanical braking from the point of view of rapidity of action, smoothness of operation and reduction of wear and tear.

9 **HANDLING** OF MOTORS

9.1 Motors should be handled very carefully to increase its life and service. The following precautions should be taken in handling the motors:

a) Always use lifting hook to lift the motor;

b) Do not use any other part of the motor for lifting purposes;

c) Do not use shaft projection for dragging the motor;

d) Do not roll or drag the motor on the floor;

e) Do not keep totally enclosed fan cooled motors in vertical position with external covers as base; and

f) Avoid jerks and jolts to motors to increase the life of the bearings.

10 STORAGE OF MOTORS

10.1 Prior to installation, the machine should be stored in a clean and dry place. The machined parts have a protective coat of anti rust preservative which should not be taken off during normal storage periods. In case of long storage periodic examination should be carried out and fresh preservation should be applied, if required, after any rust or moisture has been removed. Preservation can be easily taken off by using paraffin or other solvent.

10.2 During the storage period and during installation as well as their working life, the machine should be protected from moisture, acid and alkali, oil, gas dust, dirt and other injurious substances except, of course in the case the machine is specially designed to withstand such conditions.

10.3 Special precautions should be taken when the machine is idle for considerable period to avoid corrosion of the bearings and loss of grease. It is advisable to rotate the shaft periodically as the grease tends to settle at the bottom of the housings. Before a machine is started after a long idle period, the bearing covers should be removed and grease in the housing pressed with thumbs between the races of the bearing. If any deterioration of grease is apparent, the old grease should be removed and new grease pressed in the bearing housings.

11 INSTALLATION **WORK**

11.1 General

Where the magnitude of the installation justifies the cost, a set of record plans shall be provided by the installation engineer or contractor, clearly indicating the complete layout of the installation.

11.1.1 There is always the possibility that hair, hands or clothing of persons may be caught in moving parts of electrical devices which should, therefore, be so located or guarded as to minimize the risk of such injuries. In the case of equipment, subject to the provisions of the Indian Factories Act, such mechanical protection is a statutory requirement.

11.1.2 All equipment shall be carefully unpacked and checked against the advice notes received from the manufacturer to ensure that there has been no loss or damage during transit. The rating plate details shall be checked for the requirement of purchase order. The motor or controlgear or any other equipment, connected with the operation of the motor, when received, shall be carefully checked to ensure that everything is in proper condition so that the installation work may proceed without interruption.

11.2 Location of Motors and Control Apparatus

Apparatus shall be so located that all current-carrying parts are adequately ventilated to avoid losses due to non-dissipation of heat.

NOTE — In no circumstances should a motor be enclosed in a box or other covering that restricts or excludes the ventilating air to a significant extent. Such restriction may result in the burning out of the motor when a sustained load approaching the full value is reached.

11.2.1 The motor and control apparatus shall not be located where they are liable to exposure to water, corrosive liquid, oil, steam, carbon, metallic dust, dirt or other adverse conditions or to risk of mechanical damage, unless they are suitably enclosed to withstand such conditions.

11.2.2 Adequate access shall be provided to all working parts. The possible need for facilities for removing the equipment at a later date for repairs or maintenance should be considered in relation to the accessibility of the equipment.

NOTE — For handling heavy equipment, it is often advisable to arrange for the incorporation of a lifting beam in the structure of the building, the beam being located immediately over such parts of the equipment as may require attention and being capable of supporting the maximum weight involved (*see* **4.1**).

11.2.3 The placing of apparatus in situations where inflammable materials may be present should be decided in relation to the fire risk involved, and where it is impracticable to segregate the apparatus from such material, the use of flameproof apparatus should be considered.

11.2.4 Resistors likely to be operated at high temperature shall be adequately spaced away from combustible materials, such as wood-work, in order to combat the risk of fire. Wherever the temperature of the casing of the apparatus is liable to exceed 90°C, the casing should be so located or guarded as to prevent accidental contact by persons or with combustible materials.

11.3 Foundation and Levelling

A solid, substantial foundation of concrete shall be provided for the installation of motor. A good mixture of concrete for this purpose consists of one part best grade cement, two parts clean sand and, three to four parts broken stones. The materials shall be thoroughly mixed whilst dry, water being added subsequently and slowly until the mixture is just sufficiently wet to pass freely into all the crevices and corners. The foundation depends upon the size and weight of the motor and the nature of ground.

11.3.1 In case of motors with 315 frame and above, preparation of civil foundation shall be carried out taking care that:

a) The foundation for the motors shall be designed for static as well as dynamic loads. All natural frequencies shall be away from resonance zone with respect to the operating speed of machine. The dynamic amplitudes at the foundation level shall be well within the acceptable limits given in IS 2974 or as recommended by the manufacturer.

b) Foundation shall be cast using concrete mix (as per design) in accordance with IS 456 : 1978 and IS 2974. It shall be ensured that foundation is free from defects like cavities, pits, surface cracks, etc.

c) It shall be ensured that concrete foundation is cured completely. The soundness of concrete foundation block should be tested by the standard method laid down in relevant standard.

11.3.2 Where the anchor or rag bolts which hold down the motor are to be embeded in concrete, their location should be determined with great accuracy, otherwise, they may not be in line with the holes in the base or bedplate of the motor. For this purpose, a wooden template made with holes corresponding to those in the motor base should be used. Where the motor rests directly on the foundation, great care should be taken in the levelling of the foundation so that the motor is not strained or distorted when the mounting bolts are tightened.

11.3.3 A motor mounted on slide rails or on solid concrete foundation shall be carefully levelled up and paralleled and grouted-in using motor with one part cement, two parts clean sand and three-quarter part fine broken stones. The slide rails shall be packed up about 15 mm above the concrete bed to allow a sufficient thickness of grout. Holes, preferably pipe lined, shall be left in the foundation block for foundation bolts.

11.3.4 Threaded rods with a nut on each end are preferred for use as foundation bolts in clearance holes, usually with the bottom of each bolt in a pocket provided with an opening to the outside of the concrete foundation wall. A blind pocket may be used if a thick drilled and tapped plate is used instead of the retaining washer. The bolts in clearance holes with the bolt head grouted in the foundation permit bending or distorting the bolt to take care of adjustment of base plate or sole plates. If necessary, the bolts should be grouted in after the slide rails have been set, allowing the grout to be about 15 mm above the bottom of the rails.

11.3.5 *Special Positions*

Motors intended for mounting on a wall shall be fixed on slide rails in the usual way and a suitable angle bracket fixed on the wall to carry the rails and motor. A motor required for inverted running, that is suspended from roof griders, should preferably be a housed in a fixture. It is not advisable to use the ordinary cast iron slide rails for this method of mounting without first consulting the makers. In the case of oil-lubricated bearings, it is important to see that the oil well is arranged with the cover horizontal by suitably shifting both end brackets.

113.6 *Resilient Mounting*

It shall be ensured that undue amount of vibration from

other machinery is not transmitted to the motor. Though motors are normally required to be rigidly fixed, resilient mounting, that is using springs, rubber or other similar material may be necessary where transmission ofvibration is likely to cause inconvenience or harm. Wbere silence in running is essential or transmission of sound undesirable, special precautions shall be taken in the mounting of the apparatus or alternatively sound-absorbing treatment should be applied to the equipment as a whole.

11.4 Insulation Resistance

Insulation resistance of the motor shall be measured between the windings of the machine and its frame by means of a meggar. Often the motors are kept in a store for some time or they are transported under very damp conditions and in such cases, the insulation resistance generally becomes low and it is dangerous for the motor to he connected up before the condition has been rectified.

11.4.1 *Drying Out*

If the measured insulation resistance of the motor is less than 1 MΩ/kV with a minimum of 1 MΩ when the machine is cold, it should first be dried out before full voltage is applied to the terminals of the motors.

11.4.1.1 *Principles of drying out*

Whatever method is employed for drying out a motor, the general principle is to apply heat continuously for a considerable time so as to drive out any moisture which may have become entrapped in the windings. Severe damage can result from improper beating of winding. Avoid too rapid beating. Provide some ventilation to carry off moisture and to ensure circulation of heated air. During drying out period, it is recommended to take measurement of the insulation resistance periodically. It will generally be found that at the beginning of the drying out, the insulation resistance decreases. This is due to the fact that as the heating starts the moisture is redistributed in the windings. After some time, the insulation resistance value reaches a minimum and then stabilises at this for some time, after which it begins to increase until it reaches its maximum value. When the maximum value of the insulation resistance has been reached, it is safe to put tbe motor into service.

11.4.1.2 The convenient method of drying out the motor is to place heaters or lamps around it and inside it also. It is recommended to employ suitable guarding and covering arrangements so as to conserve the heat. Heating by infrared lamps may also be used for drying the windings.

An alternative method of drying out is to block the motor so that it cannot rotate and then apply such a low voltage to the starter terminals that full-load current flows in the starter.

The temperature of the windings should not be allowed to exceed 90°C.

11.4.1.3 If it is not possible to use any of the two methods given in **11.4.1.2,** hot air may be blown into the motor but the air should be clean and dry and at a temperature of not more than 90°C. If no other means are available, coke braziers or electric radiators may be placed round the machine. Carbon filament lamps, placed inside the machine, may he employed quite satisfactorily, but care should be taken that the hot bulb is not in contact with any windings. If it is not possible to reach a sufficiently high temperature, the ventilation may be reduced by covering the stator with a tarpaulin.

11.4.1.4 Close supervision is necessary during the process of drying out by the methods given under 11.4.1.2 and 11.4.1.3. The heat generated in the windings is not easily dissipated and one part of the winding may be exceedingly hot before another part has had time to expel the moisture. This may be obviated to some extent by taking every precaution to exclude draughts from the exposed parts of the windings.

11.4.1.5 The method of heating employed for drying out shall be continuous and tbe process shall be carefully watched to ensure that the winding does not attain a temperature sufficiently high to damage tbe insulation. The maximum safe temperature of the windings measured by thermometer is 90°C. At the same time, the temperature should not he allowed to fall too low as otherwise reabsorption of moisture would take place.

11.4.1.6 In some cases, the insulation resistance will be found to drop considerably as the motor warm up will read the minimum and then remain constant for some time depending upon the dampers of the machine and as the drying proceeds, the insulation resistance will gradually rise. The drying out should be continued as long as the insulation resistance rises, or until a sufficiently high value, that is, not less than 1 MΩ/kV with a minimum of 1 MS2 at 75°C, has been reached.

11.4.1.7 During the drying out period, readings of temperature and insulation resistance shall be taken at least once an hour in order to see how the drying out is progressing. The temperature of the motor should he kept as constant as possible, otherwise the insulation resistance reading may be misleading.

11.43 If it is found that the insulation resistance of the motor does not rise even after drying out or is extremely low and persistently remains so, damage in the windings should be suspected. In some cases, this damage can be located by visual inspection but in case this damage has taken place either in the slots or in the bottom layer of the windings, cause should be investigated and defect remedied as it is very dangerous to put the motor into service if the insulation resistance is very low. If the windings insulation is very dirty and wet, insulation resistance may not increase by drying with heat. Then it has to be flushed with water jet and dried by beating. In case, insulation resistance does not improve, manufacturer may be consulted.

11.5 Alignment

11.5.1 *Selection of Drives*

Some general notes regarding selection of drives are given in Annex D. This is intended to be a guide only and is necessarily not exhaustive.

11.52 One of the considerations in alignment is that the motor shaft should be preferably level. This is necessary as otherwise undue loading may occur on the bearings of the motor, even when flexible couplings are used, under the influence of the drive forces. The motor shaft cannot be made level unless the shaft of the driven machine is already levelled. It is, therefore, recommended to ensure that the driven machine or driven shaft is level in the first instance. Provided this has been done, the principle to follow with a direct coupled drive is to ensure that both the shafts are in line; and in case of gear or pulley drive to ensure that both the shafts are parallel.

11.5.3 *Direct-Coupled Drives*

With direct-coupled drives the two shafts should be in accurate alignment. This is of utmost importance owing to the possibility of there being eccentricity of coupling periphery with shaft axis, cut of squareness of coupling faces with the shaft axis, and axial movement of shafts during process of alignment. It may be emphasized that it is the shaft that requires to be lined up and not the couplings. If a driven shaft has **been levelled, it is recommended** to bring the two couplings close together and line them up. If it is found that the driven coupling is lower, arrangements should be made to lift the driven machine or to cut down the top of the concrete foundation to lower the motor. If on the other hand, the motor shaft is found lower than the driven shaft, then the motor should be packed up bring the two couplings into line. The packing should be inserted close to the foundation bolt. If the packing is too far removed from the foundation bolts the bed plate will bend when they are tightened down. The correct and incorrect methods of putting the packing are shown in Fig. 1.

11.5.3.1 When the two shafts have been lined up, it is recommended that the motor or slide rail base should be lifted at least 3 mm from the top of the concrete foundations by means of packing pieces. This space may be filled later with the grouting mixture.

Alignment is achieved by checking the following:

a) ***Axial positioning of shaft*** — Small and medium size motors normally have a small end play and the motor should be positioned so that with its shaft fully extended towards the driven shaft and vice versa the specified gap between half couplings is obtained;

b) ***Paralleling of shaft*** — Coupling gap readings should be taken at 12 o'clock and 6 o'clock positions and the two half-couplings rotated together through 180° when a second set of readings at 12 o'clock and 6 o'clock should be taken. The algebraic difference between readings should be equal for correct alignment in the vertical plane. A similar set of readings should be taken at the 3 o'clock and 9 o'clock positions on the coupling and if the algebraic difference is equal, it will indicate alignment in the horizontal plane; and

c) Centering ***of shafts*** — This should preferably be done with driving motor and driven shafts at normal working temperature. The clock gauge is securely clamped to one-half coupling with the gauge needle on the other half coupling. Both half **couplings** are rotated through one full revolution, gauge readings being taken at 12 o'clock, 3 o'clock, 6 o'clock and 9 o'clock positions. The same clock gauge reading should be obtained in all angular positions of the coupling. Adjustment may be made by shimming. Checks should be made on previous settings, if any adjustment is made.

11.5.4 *Chain Drives*

With chain drives, the alignment should be correct and the driving and driven shaft parallel with each other and the chains running centrally on their sprockets at right angles to the shaft, otherwise the life of the chain may become very short and an excessive end thrust imposed on the motor. Vertical chain drives should be avoided. The chain should not be drawn up tight as this is likely to produce destructive vibrations and prove harmful to the bearings. The chain drive should be provided with a self-oiling device by means of pump and sump.

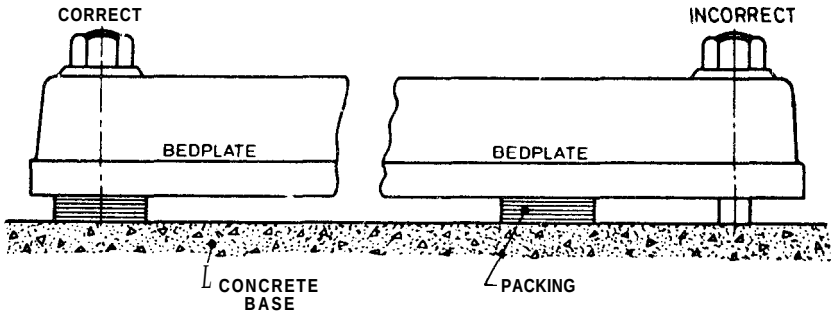

FIG. 1 PACKING AND BED PLATE FOR GROUTING

11.5.5 *Gear Drives*

With gear drives, alignment is equally important. The centre of the pinion should be in line with the centre of the spur wheel and the two wheels perfectly parallel, the latter being checked by means of feeler gauges between the teeth of the respective wheels. The gear wheels should be fully meshed both in depth and along their width of face and the check for meshing should be made all the way round the driven wheel in case it is out of truth. Should the driven wheel be out of truth and the meshing adjusted correctly at the lowest point of the driven wheel, the gears may jam when the high parts engage and probably bend the motor shaft.

11.5.5.1 Bevel or single helical gears impose an end thrust on the motor shaft, and are, therefore, not recommended unless provision is made to take the thrust. Double helical gears may also transmit an end thrust if the end-play in the bearings of the driven gear is greater than the end-play in the motor bearings. Where mechanical conditions are severe, it is sometimes necessary, particularly in the case of larger motors, to employ an outboard bearing for the motor shaft and in some cases to mount the driving pinion in two separate bearings and couple it to the motor through a suitable flexible coupling. A flexible coupling is invariably necessary when a motor is coupled to a self-contained gear box. It is advisable, when any drive of the types mentioned above or similar types are considered, that this be specified so that provision may be made to suit the conditions.

11.5.6 *Flexible Coupled Drives*

Flexible couplings require as accurate an alignment as solidly coupled machines. Poor alignment could quickly ruin flexible couplings and may damage bearings and shafts. Use flexible type couplings which will accommodate small inaccuracies of an alignment between motor and driven member. Ensure that this shaft does not project beyond the face of the coupling and that there is small amount of axial clearance between the faces of the two halves of the couplings so that the motor bearings are not subjected to the end thrust.

11.5.7 *Final Alignment*

When carrying out final alignment, it is necessary in the case of all types of drive, to ensure that the packing pieces placed between bedplates or slide rails and the top of the foundation block are positioned correctly, that is, they shall be at the position of the foundation bolt holes and not in between those positions, and there shall be enough of these supports to ensure that where foundation bolts are tightened down the bedplate or slide rails will not be bent.

11.5.8 After alignment of any drive, it is always essential that the motor be turned over slowly by hand if possible. Feel for any increase of resistance or jerkiness. If it is not possible to turn the motor by hand, the motor should be used (after wiring up) at slow speed watching the ammeter for any sudden increase of load. The final check should always be done after the bolts have been finally tightened down and any tight spot which is indicated by fall or sudden increase in ammeter reading should be investigated and eliminated before the drive is put into service.

11.6 Fitting of Pulleys and Couplings

Clean' both shaft and coupling bore and smear lightly with oil. Clean keyway and make sure key is fitting properly on the sides of the keyway in both shaft and coupling. The key should have clearance at the top and should not fit tightly both top and bottom faces. If force has to be applied to put the pulley or coupling on shaft, it is desirable that non-driving end pressure or hammer blows are not borne by the bearings. While fitting pulleys, couplings, etc, to motor shaft, excessive force shall not be used as the bearings may get damaged. Where no tapped holes arc provided by the makers, the pulley, pinion or coupling should be a good tapping fit and the opposite end of the shaft should be supported to take the shock of the blows of a mallet. If the pulley, pinion or coupling does not go on to the shaft with the application of moderate force, it is recommended that it be warmed up to 100 to 120°C and then tapped on. If it does not go on easily under this condition, the bore should be checked. The shaft shall not be filed or otherwise reduced in diameter as the motor would cease to be interchangeable. Pulleys, pinions and couplings shall not be removed by using a pinch bar between the bearing housing pulley or coupling boss, as the bearing housing may be broken or the shaft bent. Withdrawing tackles shall be used.

11.7 Belt Drive

Arrange the drives so that the slack side of the belt is uppermost. Do not overtighten the belt and avoid a belt fastener which knocks the pulley as this may damage the bearings. Avoid vertical drives. Pass and loose pulley drives should be arranged so that the drive is on the fast pulley when the belt is nearest to the motor.

NOTE — Check for proper alignment of pulleys before starting with belts.

12 CHECKS BEFORE COMMISSIONING

12.1 General

All equipment shall be inspected and tested by competent persons before being actually put into service.

12.2 Mechanical Checks

Machines shall be checked for alignment to ensure that undue stresses are not imposed on their bearings.

12.2.1 Where oil-lubricated bearing are employed, care shall be taken to see that oil does not penetrate on to windings or other insulation. Oil should be checked to see that it is clean and up to the right level, and of the correct grade as specified by the manufacturer.

12.2.2 In case of motors with pedestal bearing, the air gaps between stator and rotor shall be checked

before commissioning and recorded for future reference.

12.23 Mechanical operation of motors, controlgear and protective devices shall be checked for freedom from foreign matter, care being taken when commissioning to see that all packing materials are removed.

12.2.4 In the case of motors and controlgear, attention should be paid to all contacts, the contact pressure and contact area being checked and verified as being proper to the operating conditions involved.

12.2.5 If ball or roller bearing motors have been kept idle for periods longer than six months, whether new, spare or stand-by plant, the bearing covers shall be removed for inspection of grease. If it is found that the grease has a skin over the surface, the bearings shall be washed thoroughly in petrol to which a few drops of oil have been added. The bearing housings shall be repacked with new grease of the grade and quality recommended by the makers, care being taken to ensure that the balls or rollers will not chum in the grease. One of the chief functions of grease is to prevent the entry of dust into the bearing, very little being required for lubrication.

12.3 Electrical Checks

The terminal markings of motors shall be checked for conformity with Annex B of IS 325 : 1978. Before connecting it to the mains, all connections shall be checked with the wiring or circuit diagram applied, use cables of adequate size to carry the full load current marked on the motor rating plate and also large enough to carry the starting current without excessive voltage drop. In general, the starting current may be 6 to 7 times full load current on full voltage depending upon the speed when the motor is switched on the line. The motor body should be earthed in accordance with 5.3.3.

12.3.1 All fixed connections shall be checked for tightness and where heavy currents are involved, a check shall be made to see that proper contact, adequate in area and pressure to prevent undue heating, is effected between all contact surfaces.

12.33 The rating of fuses shall be checked by inspecting the marking on the cartridge in the case of cartridge-type fuses or the gauge and type of wire in the case of rewirable type fuses. Where practicable, the operation of overload, no-volt and other types of protective devices should also be checked. The results of such checking should be related to the ascertained resistance of the earth-fault current path so as to determine the prospect of the protective device operating in the event of a fault.

12.33 Protective fuses shall be examined regularly. Where relays are used in conjunction with current transformers, the test should preferably simulate working conditions by utilizing the injection method whereby current is passed through the relays by the application of a variable injection voltage from transformer designed for the purpose.

12.3.4 The main and looped earth wires shall be continuous. To ensure this, all earth connections shall be checked for tightness and the earth resistance shall be measured and recorded.

12.35 All oil dashpots shall be checked to ascertain that they contain the correct grade and quantity of oil.

12.3.6 In the case of oil-filled equipment, the insulating oil level shall be inspected and checked against the indicated correct level for the equip ment concerned. The dielectric strength of the oil shall be tested in accordance with IS 335 : 1983.

12.3.7 On completion of installation of a three-phase motor, the construction engineer or the contractor concerned shall submit a completion report in the form given in Annex E.

13 COMMISSIONING OF MOTOR

13.1 Starting Up

Before the equipment is put into service, it shall be tested for insulation resistance; other tests as may be necessary should also be made. Continuity tests shall be carried out, particular attention being given to the secondary connections of current transformers. Before switching on for the first time, protective devices shail be set at their minimum current values and at the minimum time setting in order to minimize the consequence of any fault condition which may arise. After all the checks as mentioned above and in 10 have been made and found satisfactory, start the motor gradually, being ready to stop, should the rotation be in the wrong direction or should anything suddenly appear to be wrong.

13.1.1 In case the motor runs in the wrong direction on starting up, it is quite simple to reverse the rotation by changing over two of the three leads of a three-phase motor.

13.1.2 If everything is found satisfactory, increase the speed slowly waiting for some time on each step for the motor to accelerate. When motor comes up to full speed, observe that there are no excessive vibration and noise and that the drive is running smoothly. If the motor is of the slip-ring type with brush lifting and short-circuiting gear, care should be taken that the brush lever is in the start position before closing the stator switch, and as soon as motor comes up to full speed, the brush lifting and short-circuiting handle is moved smartly to the run position.

13.2 Failure to Start

If upon attempting to start the motor, it is found that it fails to revolve or does not accelerate beyond a certain speed, the starting handle shall be returned to the 'OFF' position at once, otherwise the winding may be damaged. Before attempting to start again, a careful inspection shall be made to ensure that:

a) The connections are correct and in accordance with the diagrams supplied;

b) Voltage is present at the starter terminals (make sure that no section main switch is open and there are no fuses drawn on the motor circuit);

c) All terminals are tight, and there are no bad contacts in either cabling or control circuits;

d) The brush gear handle is in the start position; and

e) The line voltage is not dropping excessively when the starter is operated.

13.2.1 After this inspection, if everything is found satisfactory, another attempt should be made to start the motor. If the motor still does not start or accelerate to full speed, the driven machine should be uncoupled from the motor and a fresh attempt made to start the motor.

13.2.2 When the motor runs up to full speed, load may be applied to the driven machine.

13.3 Failure to Take Load

If the direction of rotation is correct and motor runs satisfactorily while it is not loaded, but trips out when load is applied to the driven machine, a check should be made that the overload trips are correctly set and that time lags, if any, are suitably adjusted. A check should also be made that the load is not excessive. It is also recommended to check that no tight point has developed in the drive under loading conditions. If it is found that the motor still refused to carry the load, the manufacturers of both the motor as well as driven machine should be consulted.

14 TEMPERATURE RISE

14.1 The temperature of the motor running at its rated load as judged by hand is not a reliable indication as the insulations of the windings in contact with core will withstand a maximum temperature rise as mentioned in individual motor specification. For general information, the following may be taken as guidelines for limits of temperature rise of windings, when the ambient has not exceeded 40°C:

15 OVERHEATING OF MOTORS

15.1 Overheatingofmotors may result from overloading of motors, too low supply voltage, frequency fluctuations, overgreasing, dirt, foreign material in the air gap between the stator and rotor. Do not overload or underload the motors. Overloading is the result of making motor carry too great a mechanical load. It may also be due to wrong application or excessive friction within the motor itself. Underloading of the motor results in low power factor.

16 MAINTENANCE AND PERIODICAL CHECKS

16.0 General

When an electric motor has been properly installed, it requires little attention later on to keep it working properly. If the motor is kept clean and dry, and properly lubricated periodically, it will give trouble-free service for a long time. All maintenance work should be done correctly under the supervision of an experienced electrician having in mind the fine clearances and the precision construction of the modern motors.

16.1 The main aim of maintenance work should be to prevent trouble rather than allow it to occur and then deal with it. To achieve this, the operation of cleaning, lubrication and inspection at regular intervals should be carried out according to a schedule, and proper records should be kept of what has been done on each occasion. This is always betterthanadoptinga haphazard method of waiting for trouble to develop and then dealing with it, because when a breakdown occurs it usually spreads to other parts also which were perfectly sound earlier.

16.1.1 *Protection of Exposed Surface*

Protective paint and varnish should be maintained in good condition by repainting or revarnishing when necessary. In many instance, such as that of windings, spraying is the only effective means of application of such protection.

Class of Insulation	Motors Up to and Above 200 kW		Motors Below 200 W	
	ETD Method	Resistance Method	ETD Method	Resistance Method
A	65°C	60°C	–	65°C
E	–	75°C	–	75°C
B	90°C	80°C	–	85°C
F	110%	105°C	–	110°C
H	130°C	125°C	–	130°C

16.2 Motors

16.2.1 *Cleaning of Motors*

Motors should be cleaned by blowing air at regular intervals to keep their ventilating passages clear, it being emphasized that many types of totally enclosed motors also require such attention, particularly when operating in dusty atmospheres.

16.2.1.1 Moisture, oil, grease and metallic dust are the principal causes of breakdown. Tbe motor should, therefore, be kept clean and dry; water dropped on the machine will soon cause trouble, unless the motor has been designed to withstand such conditions. Tbe stator and rotor windings should be kept free from oil, grease, dampness and dirt. Periodic cleaning with dry compressed air bellows or a brush is very necessary.

16.2.1.2 All motors require to be examined and dismantled from time to time and the frequency of successive cleanings will depend upon the conditions under which the machine operates. During periodic cleanings, care should be taken to clear air passages in the stator and rotor of any accumulated dirt.

16.2.1.3 Terminals and screw connections shall be kept clean and tight. If they become dirty or corroded, they should be disconnected and all contact surfaces made clean and smooth. Bad contact leads to sparking and ultimate breakdown.

16.2.1.4 After reassembly, the gaps shall be tested as a precautionary measure by means of a feeler gauge.

16.2.1.5 If it is found that the air gap measurements of two diametrically opposite points differ by about 25 percent or more, the motor shall he examined, because the brackets or bearing housing may not be correctly aligned. Gap measurement should always follow reassembly, since rubbing between stator and rotor will cause extensive damage.

16.22 *Insulation Resistance*

The insulation resistance of tbe windings shall he tested periodically during service and where this is found to drop below 1 mS2 /kV with a minimum of 1 MΩ, the motor shall be dried out and tben put into service. If weak insulation resistance becomes a regular feature, the windings should be given a coat of good insulating varnish after the machine has been dried out.

NOTE — Extra care in respect of insulation resistance is necessary in cases where the motor is subjected to dampness, chemical fumes, etc.

'16.23 Ball and Roller Bearings

Climatic conditions affect the lubrication and it is necessary to ensure that the hearings do not run hot. Higher or lower temperatures are not dangerous in themselves but increasing temperature or noise are sure signs that the hearings need immediate attention; it may be that tbe addition of a small amount of grease arrests and cures the trouble.

16.2.3.1 Every three years, tbe complete grease charge should be removed, the hearings and housings washed with petrol to which a few drops of oil have been added and thoroughly dried; all old grease should be removed from pipes and passages and replaced by new grease.

16.2.3.2 When opening up hearings for inspection and cleaning, all dirt and foreign matter shall be removed from the neigbbourhood of the bearing caps. The caps shall then be removed and the bearings, caps and housings washed with petrol to which a few drops of oil have been added; all old grease also being removed in the process and the parts tborougbly cleaned. If the hearing is in good condition, fresh grease shall be pressed well between the cage, races, balls and rollers. After packing the hearing, any superfluous grease should be wiped off. If the bearing appears dirty or if the grease has become bard *or* disintegrated, the bearing should be removed from the shaft, withdrawn from the housings and closely inspected for signs of wear.

16.2.3.3 Only the required quantity of grease should be put into the bearings as too much grease may also cause overheating in the same ways as too little grease.

16.2.4 *Sleeve Bearings*

Motors using oil-filled hearings shall be inspected frequently and when necessary the hearings shall be drained, flushed out and then refilled with tbe correct grade of new or reconditioned oil.

16.2.4.1 When filling the bearings, oil shall be poured inslowly, with the rotorstationary, until the oil reaches the prescribed level. Quick pouring leads to overfilling and the escape of oil into the windings.

16.2.4.2 The oil rings shall be examined to see that they run freely and pick up oil from the well when the motor is running.

16.2.4.3 If a bearing runs hot, the depth of oil in the well shall he examined and increased, if necessary.

16.2.4.4 Heating may arise from insufficient lubrication, lack of alignment, dirt in the oil, too tight a belt, or a bent shaft. Belts and other gear should be slackened and the speed of the machine reduced. If the bearing continues to be hot, the machine should he brought almost to a standstill, keeping the rotor moving slowly until the hearing has cooled, to prevent seizing.

16.2.4.5 It is essential for satisfactory operation of machines with small air gaps that the bearing clearance should not he excessive.

16.2.4.6 All new hearings up to 250 mm diameter shall have a diametral clearance of one-thousandth of diameter. It is recommended to remetal the worn out bearings when this clearance becomes two-thousandth of the diameter.

16.25 ***Slip Rings and Brush Gear***

These **parts** ***require*** careful inspection and attention Dust, oil and moisture should not be allowed to accumulate.Tbe brushes should slide freely in the holders without being slack; stiffness **of movement** or clogging should he remedied without delay. The tension springs should press squarely on the tops of the **brushes** and their operating mechanism should function freely. Any short-circuiting gear fitted to the motor should he lightly lubricated at regular intervals.

16.2.5.1 Tbe slip rings shall he smooth and free from oil and dirt. If roughened by sparking, they shall be cleaned with fine glass paper mounted on a wooden block shaped to the curvature of the rings. Emery cloth should not be used. If ridged or out of truth, they should be turned or ground in laths to a smooth finish.

16.252 When new brushes are to he fitted, **they** shall be bedded to the surface of the slip rings by placing them in their holders and interposing between them and the slip rings a strip of glass paper, rough side outward. Tbe strip should be worked backward and forward unit the brush face has acquired the curvature of the ring. All dust should be carefully removed. The new brushes shall he of the recommended grade.

16.2.5.3 Tbe correct brush pressure is of paramount importance from the point of view of brush and ring wear. If the pressure is too light, the brushes will chatter and cause sparking, disintegration of the brushes and blackening and burning of the rings. Too much pressure will produce scoring and overheating from frictional losses. The correct pressure is about 0·15 to 0·2 kg/cm^2 of brush area and this should he tested occasionally by means of spring balance attached as near as possible to the end of the brush spring that makes contact with the brush.

16.2.5.4 Sparking at the slip rings is harmful and should he eliminated.

16.2.6 ***Controllers, Starters and Rheostats***

The contacts and insulating part shall be kept **thor**oughly free from dirt and moisture and there shall be firm metallic connection between fixed and moving contacts when they come together. Tbe covers should be removed periodically for inspection.

16.2.6.1 Fuse contacts and terminals shall he examined periodically for cleanliness and tightness. When a **fusewire** or strip has to be renewed, care should be taken that the new one is of the correct metal and size.

16.3 **Oil** Filled Control Equipment

The insulating oil level in all oil-filled starting and control equipment, other than capacitors, shall he periodically checked and samples of the oil taken and tested for breakdown voltage, acidity and moisture. If **the** tests indicate that the oil is unsatisfactory, it should be immediately replaced by new or reconditioned oil. Where small quantities of oil are involved, periodical replacement of the oil at intervals determined by experience and sampling tests may be adopted as an alternative to periodical testing.

16.3.1 In the case of oil-filled equipment, such as switchgear and starters, whereby design arcing takes place under the surface of the oil, carbon is formed, thus necessitating the periodic re-conditioning of the oil to remove the carbon. Such equipment should, therefore, be regularly inspected and the oil reconditioned at the appropriate time.

16.3.2 Tanks or other enclosures for electrical apparatus, which have held oil may contain vapour in an explosive concentration; thus naked flames or **non**-flameproof electrical equipment shall not he used in such situations nor shall welding operations be undertaken either inside or outside such enclosures until all traces of vapour and oil have been removed.

16.4 **Earthing**

Periodic tests shall he made of the resistance of earth electrodes and of earth-continuity conductors to check the effectiveness of the earthing system.

16.4.1 Tbe effectiveness of the earth-leakage protective devices, if provided, shall be periodically checked.

16.5 **Safety Devices**

Remote tripping devices and limit switches, which are provided for safety reasons but which may not he called upon to functionundernormal operations which the interlocks are designed to prevent.

16.5.1 Interlocks designed to prevent unsafe operations shall he checked periodically by a competent person by making a deliberate attempt to perform tbe operations which the interlocks are designed to prevent.

16.5.2 Where an emergency supply as specified under 6.5 is provided, the source of supply and all ancillary apparatus shall be checked periodically.

16.6 Maintenance Schedule

A recommended schedule for periodical checks and maintenance of motors is given in Annex F.

17 GENERAL PROCEDURE FOR **OVERHAUL OF MOTORS**

17.1 The general procedure for overhauling of motors as recommended by the manufacturer should be followed. However, the following gives the general guidance for overhaul of motors:

a) Dismantle the motor without using excessive force and without hammer blows. If possible, do not open cartridge bearing housings. Do not force the hearing on the shaft by pressing the outer race. To remove hearings from shaft

apply the grips of bearing puller to the inner ring of the bearing.

b) Clean every part of dust, dirt, oil and grit using a blower, compressed air hose, bellows or brushes, and wash with petrol to which a few drops of oil have been added, as necessary. Complete removal of foreign matter is essential;

c) Check all parts for damage or wear, and repair or replace as necessary;

d) Measure insulation resistance and dry out, if necessary, until correct value is obtained. Repair or replace any damaged windings:

e) Re-enamel or re-varnish all windings and internal parts except stator bore and rotor outer iron surface; dry thoroughly;

f) Reassemble without using any excessive force. Make sure that the machine leads ate on the correct terminals and that everything is well tightened;

g) Check insulation resistance again;

h) Check the air gaps; and

j) Put back to work after making all checks and applying all rules as for initial starting.

17.2 Bearing Replacement

Before replacing the bearings, it is recommended to heat the new bearing in medium oil shell Tellus 33" or equivalent at a temperature not exceeding 90°C for about one hour to enable easy mounting by push fit and avoid hammering of bearings which may result in premature failure of the same. When bearings are removed from motors or uncovered due to partial dismantlings wrap them in clean paper immediately to keep them clean and free from dirt.

17.3 Breakdown of Motor

In the event of a breakdown before calling the service engineer, the following should be checked:

a) Make sure that the rated supply voltage is reaching the motor terminals (use voltmeter);

b) Check all connections against diagram, see that there are no breaks in the cable or wires and all terminals are clean and tight;

c) Make sure that the motor is not overloaded. This may be checked by starting the motor uncoupled from load;

d) Examine for bad contact and open circuits;

e) Examine that the brushes are making proper contacts and proper pressure is maintained (for slip ring motors);

f) Make sure that there is no drop within the supply voltage system; and

g) For squirrel cage motors with autotransformer starting, make sure that proper tapping is used.

18 DIAGNOSIS OF COMMON FAULTS AND THEIR REMEDIES

Information in regard to some of the common faults, their causes and remedies is given in Annex G. It is recommended that a chart giving this information be kept readily available for assistance to the maintenance staff.

ANNEX A
(Clause 2)

LIST OF REFERRED INDIAN STANDARDS

IS No.	Title
325 : 1978	Three-phase induction motors (*fourth revision*)
335 : 1983	*New* insulating oils (*third revision*)
456 : 1978	Code of practice for plain and reinforced concrete (third *revision*)
732 (Part 2) : 1983	Code of practice for electrical wiring insulations: Part 2 Design and construction *(second revision)*
1356 (Part 1) : 1972	Electrical equipment of machine tools : Part 2 Electrical equipment of machines for general use (second *revision)*
2551 : 1982	Danger notice plates (*first revision*)
2974 :	Code of practice for design and construction of machine foundations (*issued in parts)*
3043 : 1987	Code of practice for earthing
4691: 1985	Degrees of protection provided by enclosures for rotating electrical machinery (*first* revision)
4722 : 1991	Rotating electrical machines (*first revision)*
10118 : 1982	Code of practice for selection, installation and maintenance of switchgear and controlgear
12824 : 1989	Types of duty and classes of rating assigned to rotating electrical machines
13107 : 1991	Guide for measurement of winding resistance of an ac machine during operation at alternating voltage

ANNEX B
(Clause 6.2)

CORRECTION OF POWER FACTOR

B-l EXPLANATION OF POWER FACTOR

B-l.1 The general supply of electricity in this country is being standardized toaltematingcurrent. With alternating current, the flow of **electiricity** is not steady like gas or water through a pipe, but consists of a series of waves following each other in rapid succession. The frequency of these waves is usually 50 **c/s** and, therefore, it is referred to as a 50 cycles supply. The power of this supply depends upon two factors:

a) Voltage, and

b) Amperes (or current).

B-1.1.1 Either of the two factors mentioned **under B-**1.1 might be represented individually by its own set of waves. If these waves coincide entirely, which means that they are in step with each other, the whole of the current in the circuits is doing useful work.

B-1.1.2 If however, the two sets of waves are out of step, only a part of the current flowing through the lines can be usefully employed. There is, therefore, a ratio between the true power doing useful work and the apparent power of the supply system. This ratio is called the power factor. In a circuit in which both voltage and current are in step, the power factor is 100 percent or unity. For certain technical reasons, such as the inductive effect of a motor or other apparatus, the current may lag behind the voltage. Then, as stated above, only a part of the current becomes available for doing useful work, and it is referred to as the lagging power factor. For example, if only 75 percent current does useful work the true power is 75 percent of the apparent power, and in this instance the-power factor is said to be 0'75. The remaining 25 percent of current in the circuit is termed **wattless** or idle current. It does not do useful work, but tends to heat up the cables. This current, which is virtually wasted, has to be paid for. Many supply authorities, therefore, either penalize the consumer for a bad power factor, or give a rebate for a satisfactory power factor which allows a better employment of their distribution system.

B-2 CAUSE OF LOW POWER FACTOR

B-2.1 All induction motors take current at a power factor lower than **100** percent or unity. The power factor gets lower as the load on a motor is reduced and is lower on **slip-ring and/or** slow-speed motors **than on** squirrel-cage motors or any motor running at a higher speed. It is important, therefore, that apart from first cost or other considerations, motors that would be as nearly as possible fully loaded and run at as high speed as possible, consistent with good drive conditions, be installed.

B-3 CORRECTION OF **POWER** FACTOR

B-3.1 Most supply companies make no surcharge if the total power factor is not less than 0'95. The **efficiency**andpowerfactorofmotorsatvariousloads may be obtained from the **manufacturers.** The average power factor may be obtained from the meters employed by the supply company when a rate including surcharge for low power factor is in force.

B-3.2 The power factor is expressed by the ratio:

$$\frac{\text{True Power}}{\text{Apparent Power}}$$

B-3.2.1 True power is the reading given by a wattmeter. Apparent power is the product of volts and ampere (multiplied, in the case of a three-phase system, by $\sqrt{3}$ or 1'732). Most supply companies use a three-phase integrating **watthour** meter for measuring the true power and an integrating sine meter for measuring the **wattless** component in which case the ratio:

$$\frac{\textbf{Wattless kVA Hours}}{\textbf{kW Hours}}$$

is equal to the tangent of the angle of lag and the equivalent cosine may readily be found from mathematical tables. The cosine of the angle thus found is the power factor of the circuit.

B-3.3 Table 1 shows the factor by which the load in **kW** has to be multiplied to obtain the reactive capacity, as given below, kvat to improve the existing power factor to the proposed corrected one:

Reactive **kVA** = Load in **kW** x Factor

Table 1 Factors for Obtaining Reactive Capacity from Load

(Clauses B-3.3, B-3.3.1 and B-3.3.2)

Existing Power Factor	Proposed Power Factor				
	0·80	0'85	090	095	unity
0'40	1'537	1'668	1·805	1959	2.288
0·41	1'474	1'605	1'742	1'896	2.225
0'42	1'413	1544	1'681	1'836	2'164
0·43	1'356	1·487	1'624	1'778	2'107
0'44	1'290	1'421	1'558	1712	2041
0·45	1·230	1360	1'501	1.659	1'988
0'46	1'179	1'309	1'446	1·600	1929
0'47	1.130	1'260	1'397	1'532	1'881
0·48	1·076	1'206	1343	1'497	1'826
0·49	1030	1'160	1'297	1'453	1'782
0·50	0982	1'112	1'248	1·403	1'732
0·51	0936	1·066	1202	1'357	1'686
0·52	0·894	1·024	1'160	1'315	1'644
0·53	0·850	0980	1.116	1271	1'600
0·54	0'809	0939	1075	1·230	1'559
0·55	0769	0·899	1·035	1'190	1'519
0·56	0730	0860	0996	1·151	1·480
0·57	0·692	0·822	0958	1'113	1'442
0'58	0·655	0'785	0921	1·076	1'405
0·59	0·618	0·748	0·884	1·039	1368
0·60	0·584	0·714	0·849	1·005	1'334
0'61	0·549	0'679	0·815	0970	1'299
0·62	0·515	0·645	0'781	0936	1'265
0'63	0'483	0·613	0·749	0904	1'233
0·64	0·450	0·580	0716	0·871	1·200
0·65	0·419	0·549	0·685	0·840	1'169
0·66	0·388	0·518	0·654	0·809	1'138
0·67	0'358	0·488	0·624	0779	1·108
0·68	0·329	0·459	0'595	0750	1079
0·69	0·209	0·429	0·565	0·720	1·049
0·70	0·270	0·400	0·536	0·691	1·020
071	0242	0'372	0·508	0·663	0992
072	0·213	0·343	0·479	0'634	0963
073	0·186	0316	0·452	0'607	0936
0·74	0'159	0289	0'425	0·580	0909
0·75	0·132	0262	0·398	0·553	0·882
076	0·105	0235	0·371	0·526	0·855
0'77	0079	0209	0·345	0·500	0·829
078	0053	0·183	0'319	0·474	0·803
079	0·026	0·156	0·292	0·447	0776
0·80	—	0130	0266	0·421	0·750
081	—	0·104	0240	0·395	0724
082	—	0078	0214	0·369	0'698
0'83	—	0052	0·188	0·343	0'672
0·84	—	OQ26	0·162	0·317	0·645
085	—	—	0·136	0·291	0'620
0·86	—	—	0·109	0·264	0·593
087	—	—	0·083	0·238	0·567
0·88	—	—	0·054	0·209	0·538
0·89	—	—	0028	0·183	0'512
090	—	—	—	0·155	0'484
091	—	—	—	0·124	0453
092	—	—	—	0097	0'426
093	—	—	—	0·066	0·395
094	—	—	—	0034	0'363
095	—	—	—	—	0·329
096	—	—	—	—	0'292
097	—	—	—	—	0250
098	—	—	—	—	0·203
099	—	—	—	—	0·143

B-3.3.1 The graph in Fig. 2 has been compiled for ease of calculation and may be used in place of Table 1.

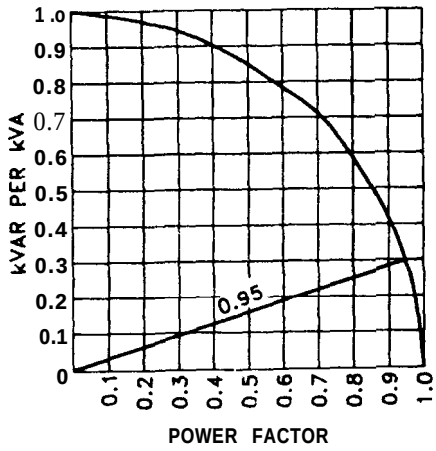

FIG. 2 POWER FACTOR IMPROVEMENT — CAPACITOR OUTPUT

B-3.3.2 To use the graph, draw a line from the zero axis to intersect the curve at the value of the corrected power factor required and read off kvar per kVA from the line to the circle at the original power factor. As this is usually 0·95, that line has been shown. For example, to correct a load of 100 kVA from 0·7 to 0·95 lagging, take the vertical distance from the line shown, at 0·7 power factor, to the circle, which is 0'48 kvar approximately. Therefore, 48 kvar will be required. This can be checked from Table 1, thus 100 kVA at 0·7 power factor is 70 kW and the reactive kVA required is, therefore, 70 x 0691 = 48'370.

B - 4 POWER FACTOR CORRECTION DEVICES

B-4.1 Correction Devices

There are two practical methods of power factor correction as given below:

a) By means of shunt capacitors, and

b) By means of synchronous motors or condensors.

B-4.1.1 The method at B-4.1 (b) is mainly applicable to large installations and is consequently beyond the scope of this code. Attention is, therefore, confined to the first method only.

B-4.2 Location

Best results are obtained by connecting the capacitor as close as possible to the motor or other apparatus which requires power factor correction. In practice, however, this is not always possible. In cases where one capacitor has to correct the power factor of several motors, the capacitor should be connected across the LT side of the mains, and always on the load side of the supply meter.

B-4.3 Correction

Group correction is often advisable, especially when the total average load represents only a part of the installed motor rating and is fairly constant. If, however, the existing power factor is as low as, says, 06 or less, and the load not constant, skilled attendence for the switching operation may be required. In such cases the human element may be eliminated by adopting individual correction which is also recommended where motors are being added to an existing installation. However, each case has to be treated on its merits.

B-4.3.1 Details of connections are illustrated in Fig. 3 and 4.

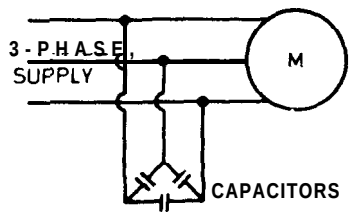

3A Shows connections of capacitors to three-phase motor. The capacitors are delta-connected, which is standard practice on three-phase supply

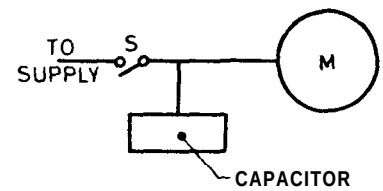

3B The switch 'S' which controls the motor, simultaneously also switches the capacitor ON or OFF

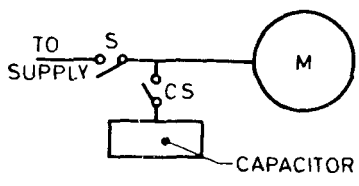

3C A separate switch 'CS is provided for the capacitor. This refers to a case where the corrected power factor exceeds 0'95

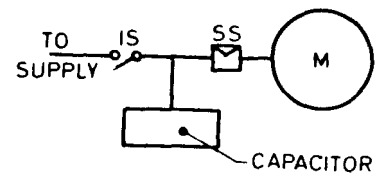

3D No separate capacitor switch is shown. Where isolator 'IS' and 'SS are in existence, the capacitor is connected to a point between these switches

PIG. 3 INDIVIDUAL CONNECTIONS

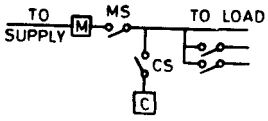

4A The capacitor 'C is connected to the mains on the load side of the meter 'M. Where the capacity of the capacitor in kVA does not exceed the kVA of the corrected load, the capacitor switch 'CS may not be required provided a leading power factor is immaterial

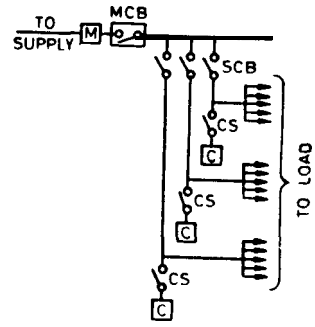

4B Capacitors are located close to each section of the total load. Their point of connection is on the load side of the respective sub-circuit breakers '*SCB*'. The capacitor switches 'CS may be omitted in certain cases

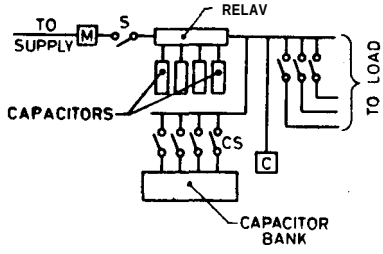

4C Inthis isshownan arrangement of capacitors for fully automatic regulation. As the powerfactoroftheloadvaries, several sections of a capacitor bank can be switched on or off by a relay maintaining a predetermined power factor. A comparatively small capacitor '*C*' may be permanently connected

FIG. 4 GROUP CONNECTIONS

B-4.4 Where a capacitor is connected across the terminals of an induction motor, care should be taken that the current taken by the capacitor does not exceed the motor magnetizing current as otherwise dangerous over-voltagesmaybesetupwhenthemotorisswitched off due to the self excillation effect, values of magnitising current can be obtained from the manufacture but the following table gives capacities that, it is recommended, should not be exceeded. If a greater capacity is required, the excess should be connected at some other convenient point in the distribution system.

Rating of Motor	*Capacitor Rating* kvar		
kW	750 rev/min	1 000 rev/min	1 500 rev/min
3'7	3'5	2'5	2·0
7'5	5'5	4'5	4·0
11	75	6·0	5·0
15	9'0	7'0	6·0
185	11'0	9'0	7·0
22	12'0	10'0	8·0
30	15'0	13'0	11·0
3 7	18·0	16·0	13·0
75	30'0	27·0	23·0

ANNEX C
(Clause 7.0)

METHOD FOR INSTALLATION OF WIRING FOR TWO OR MORE MOTORS

C-l CIRCUITS FOR MOTORS

C-1.0 General

Where wiring is to be installed for two or more motors, any one of the circuits given under C-l.1 to C-l.3 to suit particular requirements may be used, keeping in view the degree of protection necessary. and tbe economy that can be obtained.

C-l.1 Two alternative methods of wiring of two ore more motors are shown in Fig. 5 and 6.

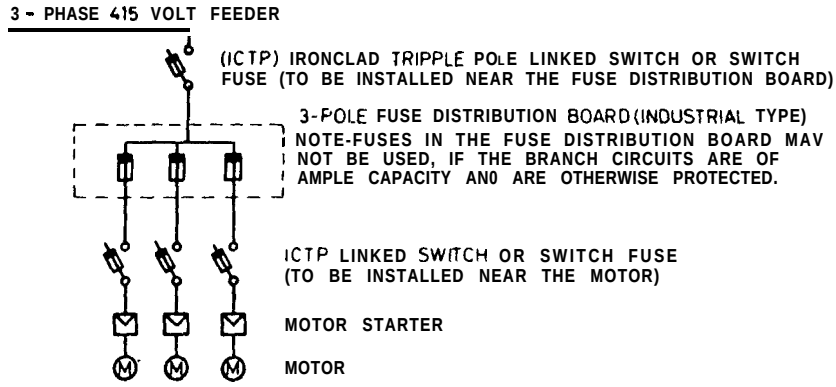

NOTE — If means for isolation are provided within the motor starter no separate isolator switch will be necessary. *ICTP* near the starter is necessary only if the fuse board is away from the motor.

FIG. 5 WIRING CIRCUIT FOR MOTORS CONNECTED FROM A FUSE DISTRIBUTION BOARD

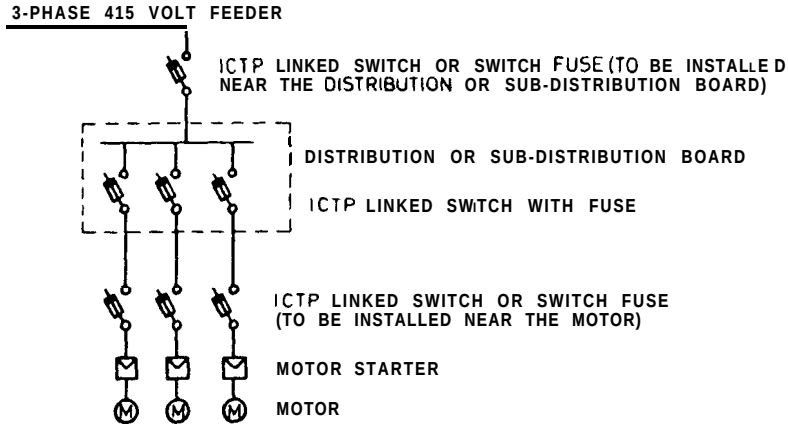

NOTE — If means for isolation are provided within the motor starter no separate isolator will be necessary. *ICTP* near the starter is necessary only if the fuse board is away from the motor.

FIG. 6 WIRING CIRCUIT FOR MOTORS CONNECTED FROM A DISTRIBUTION OR SUB-DISTRIBUTION BOARD PROVIDED WITH A LINKED SWITCH WITH FUSE

C-1.2 In the method shown in Fig. 5, a separate circuit is run to each motor from a fuse distribution board; the use of fuses may be dispensed with, in case the branch circuits are of ample capacity, and are otherwise protected. In the method shown in Fig. 6, a separate cicuit is run to each motor from a distribution or sub-distribution board instead of a fuse distribution board. The distribution and sub-distribution boards incorporate linked switches with fuse.

C-1.3 A feeder comprising busbars enclosed in metal casing may be carried overhead around the building with branch circuits tapped off the feeder. This would normally require an over-current protectivè device for each branch circuit. From economic considerations this method is generally used where there are a number of motors in a bay or row (see Fig. 7).

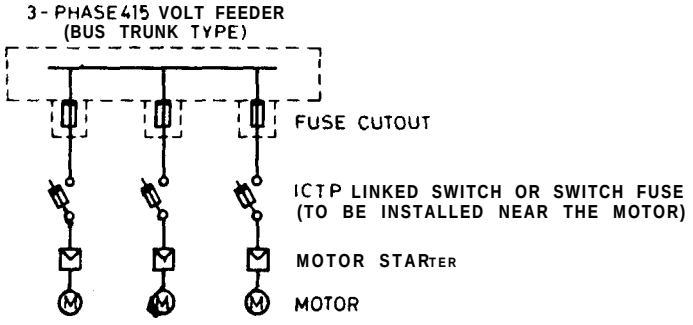

NOTE — If means for isolation are provided within the motor starter no separate isolator will be necessary. *ICTP* near the starter is necessary only if the fuse board is away from the motor.

FIG. 7 WIRING CIRCUIT FOR MOTORS IN ROW OR BAY

C-1.4 General arrangement of wiring for motors conformingto the recommendations given in this code and complyingwith the relevant Indian Electricity Rules is shown in Fig. 8.

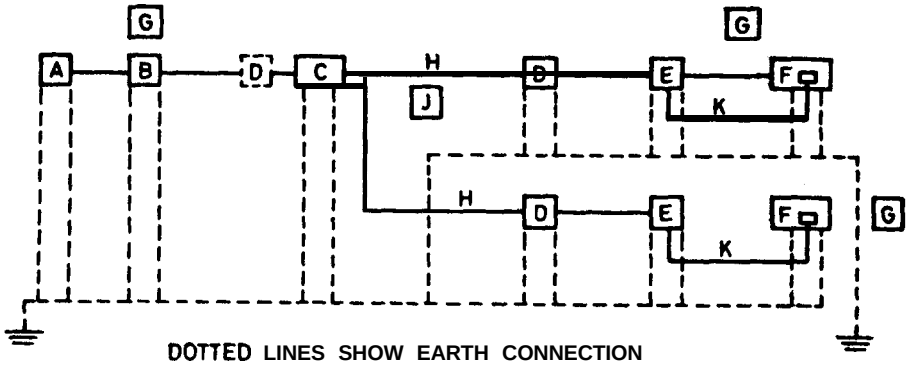

A = Supply company's metering panel

B = Iron-clad main switch with overload releases or enclosed cut-outs

C = Power panel (*see* Fig. 5)

D = Triple pole iron-dad switch near motor, also near power panel it this is some distance from main switch (shown dotted)

E = Motor starter fitted with over-current end no-volt protective devices

F = Motor

G = Danger notice plate in accordance with IS 2551 : 1952

H = All cables to be steel armoured or bunched in a metal conduit

J = Card with instructions for resuscitating persons suffering from electric shock

K = Earthed metallic tubing protecting cables from starter to motor

FIG. 8 GENERAL ARRANGEMENT OF WIRING CIRCUIT FOR MOTORS IN ACCORDANCE WITH THE CODE

C-1.5 General arrangement of wiring for motors with remote control arrangement is shown in Fig. 9.

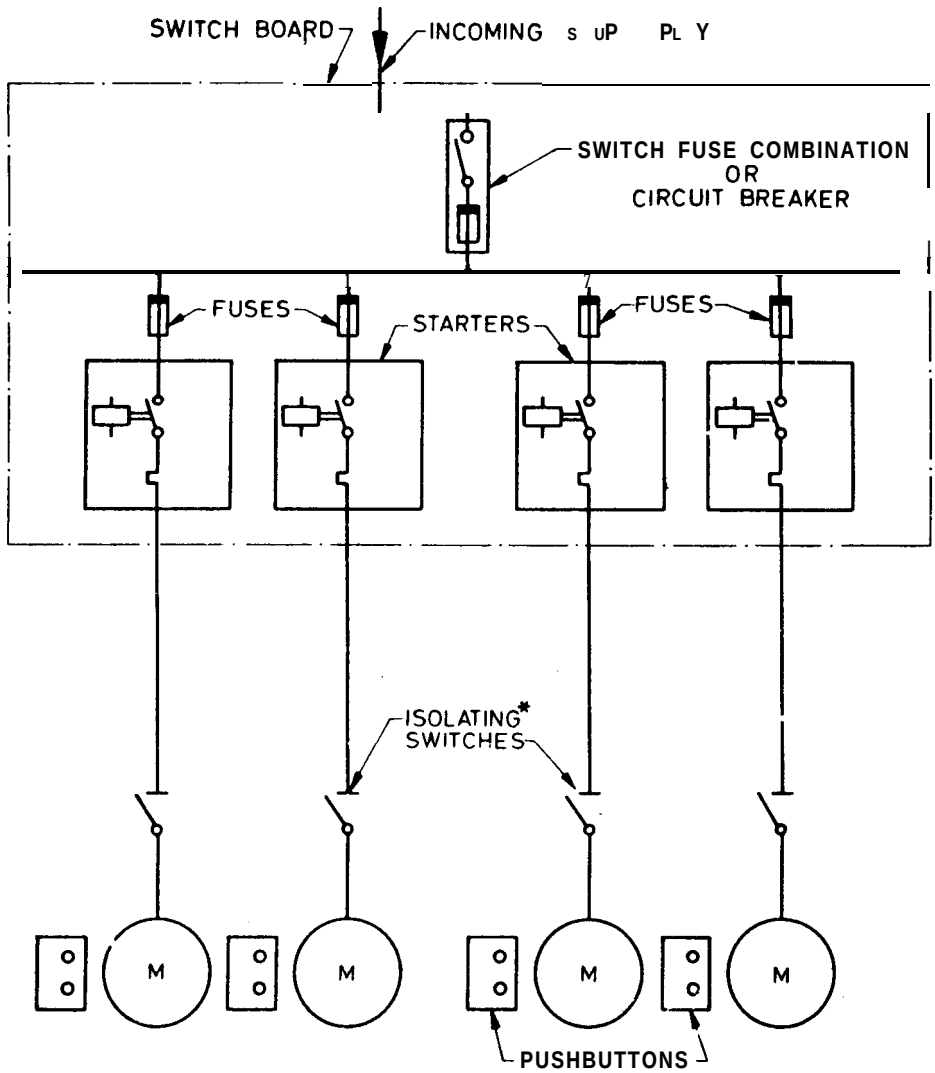

*In case motor is away from the switchboard.

FIG. 9 GENERAL ARRANGEMENT OF WIRING FOR MOTOR WITH REMOTE CONTROL ARRANGEMENT

ANNEX D
(Clause 11.5.1)

GENERAL NOTES ON SELECTION OF DRIVES

D-1 GENERAL

D-1.1 There are several methods of transmitting power from the **motor shaft** to the driven shaft, such as direct coupling, gear drive, chain drive, flat belt drive, vee-belt drive, cotton rope drive, etc. The type of drive to be selected would depend on the application.

D-1.2 When calculating the sizes of components needed in transmitting the power developed by an electric motor, it is essential to consider not only the full output rating of the motor as given on the name plate but also any overload provision which may have been made in the design of the motor, if it is intended to take advantage of this.

D-1.3 The following may be taken as a guide to the limits of belt drives with standard motors:

Full Load Speed of Motor rev/min	*Maximum Output Rating*	
	Flat Belt Drive kW	Vee-Belt Drive kW
2 850	15	Not recommended
1450	30	55
950	55	110
750	110	150

D-1.3.1 For output ratings larger than those mentioned under D-1.3, and extended shaft and outboard bearing to support the pulley at both sides should be used. This arrangement is also generally necessary in cases where the ratio of driving pulley to driven pulley exceeds 1:6 in the case of vee-belt drives.

D-2 FLAT BEET DRIVE

D-2.1 Flat belt drive is a long centre drive with a limited degree of slip. In the design of the drive, it is preferable to ensure that the slack side of the belt is at the top so that the natural sag of the belt increases the arc of contact on the two pulleys. The centre distance and minimum pulley size depend upon the thickness of the belt. The following types of flat belting are normally available:

a) Hair belting,

b) Solid woven cotton belting,

c) Rubberized cotton ply belting,

d) Leather belting,

e) Nylon belting, and

f) Terylene belting.

D-2.2 All types of belting given under D-2.1 have different power transmitting capacities and manufacturers' figures should be strictly adhered to.

D-2.3 Whatever material (leather, balata, hair or cotton) is used for the belt, the following points should be observed:

a) The ratio of the diameter of pulleys should not exceed 6 to 1 unless a device like a jockey pulley is used to increase the arc of contact;

b) The arc of contact also depends on the distance between the two pulleys and as a general rule the distance between the centres of the driving and driven pulley should be not less than four times the diameter of the larger pulley, unless some form of idle or jockey pulley is employed;

c) The stipulated belt speed should not be exceeded; and

d) Vertical and right angle drives should be avoided as far as possible.

D-2.4 The maximum powers transmitted by single leather belts at various speeds are given in Table 2.

Table 2 Maximum Power Transmitted by Single Leather Belts at Various Speeds
(Clauses D-2.4 *and* D-2.4.1)

Velocity m/min	Width of Belt (mm)					
	50 kW	100 kW	160 kW	200 kW	250 kW	315 kW
60	0'45	090	1'34	1'79	2'24	2'69
90	0·67	1'34	2'01	2'69	3·36	4·03
120	091	1'82	2'73	3'64	4·55	5'48
150	1'13	2'27	3'40	4'54	5'67	6'80
185	1'36	2'72	4'07	5'43	6·79	8·15
215	1·58	3'16	4'74	6'33	7·91	9.49
245	1'81	3'61	5.42	7'22	9.03	10'83
275	2·03	4·06	6.09	8'12	10·15	12'17
305	2'25	4.5 1	6'76	9'01	11·26	1352
460	3'39	6'77	1016	13'55	16.93	20'32
610	452	9·04	13'56	18·08	22·60	27'12
765	5'65	11'31	16.96	22'62	28'27	33'93
915	6'71	13'43	20'14	26'86	33'57	40·28
1070	7'31	1462	2193	20'24	36·55	43'86
1'220	7'59	15'19	2278	30'38	3 797	45·57
1'375	7'56	15.13	22'69	30·26	37'82	45.39

D-2.4.1 The figures given in Table 2 may be adjusted as follows for different belts:

a) Light double leather	Increase by 50 percent
b) Heavy double leather	Increase by 80 percent
c) Balata 3 ply	Decrease by 16 2/3 percent
d) Balata 4 ply	Increase by 12 percent
e) Balata 5 ply	Increase by 40 percent
f) Balata 6 ply	Increase by 66 2/3 percent

D-2.4.2 Belts should be chosen to transmit 100 percent above the normal power rating of the motor for started direct-on-line and 25 percent above the normal power rating for all other methods of starting.

D-2.5 Belt or Rope Drive

With a belt or rope drive, it should be checked that the driving and driven pulleys are perfectly parallel and in line by placing a straight-edge across the edges of the pulleys. Where it is not possible to adopt this method a line may be used but extra care should be exercised and several checks taken to eliminate possible errors. The checking of alignment should be carried out before any grouting is done. Belt or rope drives should be so arranged that the slack side of the belt or rope is at the top.

D-2.5.1 All joints should be smooth and flexible and all pulleys shall be well balanced. Belts should not be tightened more than is necessary to prevent slipping; otherwise too great a strain would be put on the bearings. Drives should be arranged as near to the horizontal as possible. Vertical and right angle drives should be avoided as far as possible.

D-3 COTTON ROPE DRIVE

D-3.1 Cotton rope dirve is a long centre drive with less slip than with flat bolts but is not very much in use. General considerations are the same as under **D-2.3**.

D-3.2 The maximum powers transmitted by cotton ropes at various speeds are given in Table 3.

D-3.3 Diameter of Pulley

The minimum diameters of pulleys for different rope diameters are given below:

Diameter of rope (mm)	19 38	22 44	25 51	32
Diameter of pulley (mm), *Min*	250 800	250 1 000	355 1 600	500

D-3.4 Centre Distance

If the centre distance is less than three times the diameter of the larger pulley, increase the number of ropes required by 20 percent, if less than twice the diameter, increase the number by 40 percent.

D-4 VEE-BELT DRIVE

D-4.1 Vee-belt drive is a short centre silent drive with negligble slip, suitable for motors from fractional up to and including 450 kW in standard industrial sizes with special types to accommodate higher output ratings. Power transmitting capacity of vee-belt drives depends on the following:

a) Vee-belt speed, and

b) Pitch circle diameter of the pulley used.

D-4.1.1 Wherever possible, it is recommended that pulley with the maximum diameter for any given belt size and the highest possible belt speed be used. The working range of speeds of vee-belts is 150 to 1 500 m/min. Special application may be catered for at lower speeds by the used of steel cable vee-belts or link belts. When designing vee-belt drives, it is essential to ensure that the vee-belt is not subject to more than 5 000 flexings per minute, that is, a belt passing over two pulleys and having an inside length of 50 cm should not exceed 1 250 m/min in speed.

Table 3 Maximum Power Transmitted by Cotton Ropes

(*Clause* D-3.2)

Velocity m/min	Diameter of Rope (mm)						
	19	22	25	32	38	44	51
	Power transmitted in kW						
305	1·87	2·61	3·36	5·30	7·61	10·44	13·58
460	2·76	4·03	5·00	7·91	11·41	15·67	20·22
610	3·80	5·22	6·79	10·60	15·29	20·89	27·23
765	4·63	6·27	8·21	12·83	18·43	25·14	32·82
915	5·30	7·16	9·40	14·77	21·19	28·87	37·60
1 070	5·82	7·98	10·37	16·26	23·42	31·93	41·03
1 220	6·27	8·80	11·04	17·31	24·92	33·94	44·31
1 375	6·42	8·73	11·41	17·90	25·74	35·06	45·80

D-4.2 For drives employing vee-belts, it is considered sound practice to maintain a distance between shaft centres greater than the diameter of the large pulley and not more than the sum of the diameters of both the driving and the driven pulleys in order to obtain the **maximum** arc of contact on the small pulley.

D-4.3 For vee-belt drives, the drive should be such that the arc of contact on the smaller vee-pulley should be not less than 90° and not moe than 130°. It has been found that an arc of contact of 108° gives the greatest efficiency but the maximum speed ratio is then 4.5 to 1.

D-4.4 Normal Sections

The following are the belt sections normally employed:

Power Transmitted	*Belt Section*
Up to 3'7 **kW**	A Section (13 mm x 8 mm)
3'7 to 93 **kW**	**B Section (17 mm × 11 mm)**
93 to 37 **kW**	**C Section (22 mm × 14 mm)**
37 to 110 kW	**D Section (32 mm × 19 mm)**

D-4.5 Power transmitted at 600 **mm/min** for the different sections is approximately as follows:

Section	*Power Transmitted* kW
A	1'27
B	1'72
C	**4·10**
D	746

D-4.5.1 The values given under D-4.5 are subject to correction for arc of contact, type of drive, etc. Different manufacturers supply their own recommended tables.

D-5 CHAIN DRIVE

D-5.1 Chain drive is a short centre drive having no slip but particular care should be taken in aligning machines. The initial tension required with a belt is unnecessary with a chain and the bearing friction due to it is, therefore, eliminated.

D-S.2 The maximum gear ratio available with chain drive is **7:1.**

D-S.3 The centre distance should be such that the arc of contact between the chain and wheel is not less than 120° with at least 7 teeth in engagement.

D-5.3.1 The maximum centre distance is approximately given by the following formula:

a) For speeds from 450 to 900 metres per minute:

$$\text{Maximum Centre Distance (metre)} = \sqrt{6\,\frac{\text{Teeth in Wheel}}{\text{rev.min of Pinion}}}$$

b) For speed below 90 metres per minute:

$$\text{Maximum Centre Distance (metre)} = \sqrt{0{\cdot}05 \text{ pitch (mm) x teeth in wheel x teeth in pinion}}$$

ANNEX E
(*Clause* 12.3.7)

RECOMMENDED FORM OF REPORT TO CONSUMER

We beg to inform you that the installation at your premises has been completed as under:

Motor	Rating	Speed	Location	Insulation Resistance	Resistance of Earth Circuit		Remarks
					1	2	
	kW	rev/min		M-ohm	Ohm	Ohm	

Signature of Contractor.. .....
Contractor's Licence No. .....

ANNEX F
(Clause 16.6)

RECOMMENDED MAINTENANCE SCHEDULE

F-l DAILY MAINTENANCE

F-l.1 Examine visually earth connections and motor leads.

F-l.2 Check motor windings for overheating (the permissible maximumtemperature is above that which can be comfortably felt by hand).

F-l.3 Examine control equipment.

F-l.4 In the case of oil ring lubricated motors:

a) Examine bearings to see that oil rings are working;

b) Note temperature of bearings;

c) Add oil, if necessary; and

d) Check and play.

NOTE — In order to avoid opening up motors, a good indication is to observe the shell temperature under normal working conditions. Any increase not accounted for, for example by seasonal increase in ambient temperature, should be suspected (see Annex G, Sl No. xiii).

F-2 WEEKLY MAINTENANCE

F-2.1 Check belt tension. In cases where this is excessive, it should immediately be reduced and in the case of sleeve bearing machines the air gap between rotor and stator should be checked.

F-2.2 Blow out windings of protected type motors situated in dusty locations.

F-2.3 Examine starting equipment for burnt contacts where motor is started and stopped frequently.

F-2.4 Examine oil in the case of oil ring lubricated bearings for contamination by dust, grit, etc (This can be roughly judged from the colour of the oil.)

F-3 MONTHLY MAINTENANCE

F-3.1 Overhaul Controllers

F-3.2 Inspect and clean oil circuit breakers.

F-3.3 Renew oil in high speed bearings in damp and dusty locations.

F-3.4 Wipe brush holders and check bedding of brushes of slip-ring motors.

F-4 HALF YEARLY MAINTENANCE

F-4.1 Clean windings of motors subjected to corrosive or other elements; also bake and varnish, if necessary.

F-4.2 In the case of slip-ring motors, check slip-rings for grooving or unusual wear.

F-4.3 Check grease in ball and roller bearings and make it up where necessary taking care to avoid overfilling (see 16.23).

F-44 Drain all oil bearings, wash with petrol to which a few drops of oil have been added; flush with lubricating oil and refill with clean oil.

F-5 ANNUAL MAINTENANCE

F-5.1 Check all high speed bearings and renew, if necessary.

F-5.2 Blow out all motor winding thoroughly with clean dry air. Make sure that the pressure is not so high as to damage the insulation.

F-53 Clean and varnish dirty and oily windings.

F-S.4 Overhaul motors which have been subjected to severe operating conditions.

F-55 Renew switch and fuse contacts, if damaged.

F-S.6 Check oil (see 16.3).

F-S.7 Renew oil in starters subjected to damp or corrosive elements.

F-5.8 Check insulation resistance to earth and between phases of motor winding, control gear and wiring.

F-S.9 Check resistance of earth connections.

F-5.10 Check air gaps.

F-5.11 Test the motor overload relays and breakers.

F-6 RECORDS

F-6.1 Maintain a register giving one or more pages for each motor and record therein all important inspection and maintenance works carried out from time to time. These records should show past performance, normal insulation level, air gap measurements, nature of repairs and time between previous repairs and other important information which would be of help for good performance and maintenance.

ANNEX G
(Clause 18.1)

MOTOR CHECK CHART

Sl No.	Trouble	Cause	Remedy
(1)	(2)	(3)	(4)
i)	Hot bearings general	Bent or sprung shaft	Straighten or replace shaft
		Excessive belt pull	Decrease belt tension
		Pulleys too far away	Move pulley closer to bearing
		Pulleys diameter too small	Use larger pulley
		Mis-alignment	Correct by re-alignment of drive
ii)	Hot bearings, sleeve	Oil grooving in bearing obstructed by dirt	Remove bracket or pedestal with bearing and clean oil grooves and bearing housing, renew oil
		Bent or damaged oil rings	Repair or replace oil rings
		Oil too heavy	Use a recommended lighter oil
		Oil too light	Use a recommended heavier oil
		Warning — The use of too light a grade of oil is likely to cause the bearings to seize up.	
		Insufficient oil	Fill reservoir to proper level in overflow plug with motor at rest
		Too much end thrust	Reduce thrust induced by driven machine or supply external means to carry thrust
		Badly worn bearing	Replace bearing
iii)	Hot bearings, ball or roller	Insufficient grease	Maintain proper quantity of grease in bearings
		Deterioration of grease or lubricant contaminated	Remove old grease, wash bearings thoroughly in petrol to which a few drops of oil have been added and replace with new grease
		Excess lubricant	Reduce quantity of grease (bearings should be not mote than half filled)
		Heat from hot motor or external source	Protect bearings by reducing motor temperature
		Overloaded bearings	Check alignment, side thrust and end thrust
		Broken ball or rough races	Replace bearings; first clean the housing thoroughly
iv)	Oil leakage from overflow plugs	Stream of overflow, plug not tight	Remove, re-cement threads, replace and tighten
		Cracked or broken overflow plug	Replace the plug
		Plug cover not tight	Fit cork gasket; or if screw type, tighten

Sl No.	Trouble	cause	Remedy
(1)	(2)	(3)	(4)
v)	Motor dirty	Ventilation blocked, end windings filled with fine dust or lint (dust may be cement, saw dust, rock dust, grain dust, coal dust and the like)	Dismantle entire motor and clean all windings and parts. Clean motor will run 10° to 30°C cooler
		Rotor winding clogged	a) Clean and grind sliprings, and b) Clean and treat windings with good insulating varnish
		Bearing and brackets	Dust and wash with cleaning solvent
vi)	Motor wet	Subject to dripping	a) Wipe motor and dry by circulating hot air through motor; and b) Install drip or canopy type covers over motor for protection
		Drenched condition due to rains	Cover the motor to retain heat and shift the rotor position frequently
		Submerged in flood water	a) Dismantle and clean the parts b) Bake windings in oven at 90°C for 24 hours or until resistance to ground is sufficient
vii)	Motor stalls	Wrong application	a) Change type or size; and b) Consult manufacturer
		Overloaded motor	Reduce load
		Low motor voltage	See that name plate voltage is maintained
		Open circuit	Replace fuses, check overload relays, starter and push button
		Incorrect control resistance of wound rotor	a) Check control sequence b) Replace broken resistors and c) Repair open circuits
		Mechanical locking in bearings or at air gap	a) Examine sleeve hearings for seizure, b) Dismantle and repair, c) Check cause as in Sl No. (ii), and d) Clean air gap if choked
viii)	Motor connected but does not start	No supply voltage One phase open Voltage too low	Check voltage on each phase
		Motor may be overloaded	Reduce load or try to start uncoupled from load
		Controlgear defective	a) Examine each step of the controlgear for bad contacts or open circuit; and b) Make sure that brushes are making good contact with the rings
		Starting torque of load too high	a) If of squirrel-cage type and with auto-transformer starting, change to a higher tap; and

Sl No.	Trouble	Cause	Remedy
(1)	(2)	(3)	(4)
			b) If of slip-ring type, lower the starting resistance
		Rotor defective	Look for broken rings
		Poor stator coil connection	Remove end shields locate with test lamp
		Mechanical locking in bearing or at air gap	a) Examine sleeve bearing for seizure; b) Dismantle and repair; c) Check cause as in Sl No. (ii); and d) Clean air gap if choked
ix)	Motor runs and then dies down (*see also* Sl No. vii)	Power failure	Check for loose connections to line, to fuses and to controlgear
		Overload	a) Examine overload trips and see that they are set correctly to approximatey 150 percent full load current; and b) See that the dash-pots are filled with correct quantity and grade of oil
x)	Motor does not come up to speed	Not applied properly	Consult supplier for proper type
		Voltage too low at motor terminals because of line drop	Use higher voltage tap on transformer terminals or reduce load
		If wound rotor, improper operation of secondary control resistance	Correct secondary control
		Starting load too high	Check the load motor is supposed to carry at start
		Check that all brushes are riding on rings	a) Check secondary connections; b) Leave no leads poorly connected
		Broken rotor bars	a) Look for cracks near the rings b) New rotor may be required as repairs are usually temporary
		Open primary circuit	Locate fault with testing device and repair
xi)	Motor takes too long to accelerate	Excess loading	Reduce load. If motor is driving a heavy load or is starting up a long line of shafting, start more slowly; allow ample time for acceleration
		Poor circuit	Check for high resistance
		Defective squirrel-cage rotor	Replace with new rotor
		Applied voltage too low	Get power company to increase voltage tap
xii)	Wrong rotation	Wrong sequence of phases	Reverse connections of motor or at switchboard
xiii)	Motor[1] over heats while running under load	Overload	Reduce load

[1] Maximum temperatures of insulated windings are specified in Table 1 of IS 325 : 1978.

Sl No.	Trouble	Cause	Remedy
(1)	(2)	(3)	(4)
		Wrong blowers, or air shields may be clogged with dirt and prevent proper ventilation of motor	Good ventilation is manifest when a continuous stream of air leaves the motor, if not, check with manufacturer
		Motor may have one phase open	Check to make sure that all leads are well connected
		Earthed coil	Locate and repair
		Unbalanced terminal voltage	Check for faulty leads, connections and transformers
		Shorted stator coil	Repair and then check watt-meter reading
		Faulty connection	Correct the connections
		High voltage Low voltage	Check terminals of motor with voltmeter
		Rotor rubs stator bore	If not poor machining, replace worn bearing
xiv)	Motor vibrates after connections have been made	Motor misaligned	Re-align
		Weak foundation	Strengthen base
		Coupling out of balance	Balance coupling
		Drive equipment unbalanced	Rebalance driven equipment
		Defective ball or roller bearings	Replace bearings
		Bearing not in line	Line up properly
		Balancing weights shifted	Rebalance rotor
		Wound rotor coils replaced	Rebalance rotor
		Polyphase motor running single phase	Check for open circuit
		Excessive end play	Adjust bearings or add washer
xv)	Unbalanced line current on polyphase motors during normal operations	Unequal terminal voltage	Check loads and connections
		Single phase operation	Check for open contacts
		Poor rotor contacts in control resistance wound rotor	Check control devices
		Brushes not in proper position in wound rotor motor	See that brushes are properly seated and flexible shunts are in good condition
xvi)	Scraping noise	Fan rubbing air/end shield	Remove interference
		Fan striking insulation	Clean fan

Sl No. (1)	Trouble (2)	Cause (3)	Remedy (4)
		Loose on bedplate	Tighten holding bolts
xvii)	Magnetic nose[1])	Air gap not uniform	Check and correct bracket tits or bearing
		Loose bearings	Correct or renew-bearings
		Rotor unbalance	Rebalance
xviii)	Motor sparking at slip-ring	Motor may be overloaded	Reduce the load
		Brushes may -not be of correct quality and may be sticking in the holders	Use brushes of the grade recommended by the motor manufacturer
		Brush pressure may be too light or too much	Adjust the brush pressure correctly (see 16.2.5.3)
		Slip-rings may be rough, dirty or oily	Clean the slip-rings and maintain them smooth, glossy and free from oil and dirt
		Slip-rings may be ridged or out of truth	Turn and grind the slip-rings in a lathe to a smooth finish

[1]) A certain amount of magnetic noise is inherent in some low speed design and should not cause alarm.

Standard Mark

The use of the Standard Mark is governed by the provisions of the ***Bureau of Indian Stan&r& Act, 1986*** and the Rules and Regulations made thereunder. The Standard Mark on products covered by an Indian Standard conveys the assurance that they have been produced to comply with the requirements of that standard under a well defined system of inspection, testing and quality control which is devised and supervised by BIS and operated by the producer. Standard marked products are also continuously checked by BIS for conformity to that standard as a further safeguard. Details of conditions under which a licence for the use of the Standard Mark may be granted to manufacturers or producers may be obtained from the Bureau of Indian Standards.

Bsreaa of Indian Standards

BIS is a statutory institution established under the *Bureau of Indian Standards Act, 1986* to promote harmonious development of the activities of standardization, marking and quality certification of goods and attending to connected matters in the country.

Copyright

BIS has the copyright of all its publications. No part of these publications may be reproduced in any form without the prior permission in writing of BIS. This does not preclude the free use, in the course of implementing the standard, of necessary details, such as symbols and sixes, type or grade designations, Enquiries relating to copyright,be addressed to the Director (Publication), BIS.

Revision of Indian Standards

Indian Standards are reviewed periodically and revised, when necessary and amendments, if any, are issued from time to time. Users of Indian Standards should ascertain that they are in possession of the latest amendments or edition. Comments on this Indian Standard may be sent to BIS giving the following reference :

Doc : No. ETD 15 (3118)

Amendments Issued Since Publication

Amend No.	Date of Issue	Text Affected

BUREAU OF INDIAN STANDARDS

Headquarters :

Manak Bhavan, 9 Bahadur Shah Zafar Marg, New Delhi 110002
Telephones : 331 01 31, 331 13 75

Telegrams : Manaksanstha
(Common to all Offices)

Regional Offices : Telephone

Central : Manak Bhavan, 9 Bahadur Shah Zafar Marg
NEW DELHI 110002 331 331 01 13 75 31

Eastern : 1/14 C.I.T. Scheme VII M, V.I.P. Road, Maniktola
CALCUTTA 700054 37 86 62

Northern : SCO 445-446, Sector 35-C, CHANDIGARH 160036 53 38 43

Southern : C.I.T. Campus, IV Cross Road, MADRAS 600113 41 29 16

Western : Manakalaya, E9 MIDC, Marol, Andheri (East)
BOMBAY 400093 6 32 92 95

Branches : AHMADABAD. BANGALORE. BHOPAL. BHUBANESHWAR.
COIMBATORE. FARIDABAD. GHAZIABAD. GUWAHATI.
HYDERABAD. JAIPUR. KANPUR. PATNA. THIRUVANANTHAPURAM.

Printed at Simco Printing Press, Delhi. India