STUDY MATERIAL FOR ELECTRICAL SUPERVISOR LICENSE EXAMS (DOMESTIC AND INDUSTRIAL)

Solved MCQs and Question Papers from State Electricity Board Exams for Supervisor License (Supervisor Certificate of Competency)

SUDESH K JAIN



Click to Buy
Amazon | Flipkart | Pothi Store

Indian Standard

CLASSIFICATION OF HAZARDOUS AREAS (OTHER THAN MINES) HAVING FLAMMABLE GASES AND VAPOURS FOR ELECTRICAL INSTALLATION

(Third Revision)

1 SCOPE

1.1 This standard provides guidance on the classification of areas where flammable gas or vapour risks may arise in order to permit the proper selection of electrical apparatus for use in such areas (*see* Notes 1 and 2 of **1.4**).

1.2 It is intended for application in all industries where there may be a risk due to the presence of flammable gas or vapour, mixed with air under normal atmospheric conditions (*see* Note 3 of **1.4**), but does not apply to,

a) mining applications susceptible to fire damp;
b) processing and manufacture of explosives;
c) areas where risks may arise due to the presence of ignitable dusts or fibres;
d) catastrophic failures, which are beyond the concept of abnormality dealt with in this standard (*see* Note 4 of **1.4**);
e) ignition sources other than those associated with electrical apparatus (*see* Note 5 of **1.4**);
f) areas where pyroforic substances are handled;
g) rooms used for medical purposes; and
h) domestic premises.

This standard does not take into account the effects of consequential damage.

1.3 Definitions and explanations of terms are given together with the main principles and procedures relating to area classification.

1.4 The objective of area classification is the notional division of a plant into zones within which the likelihood of the existence of an explosive gas/air mixture is judged to be high, medium, low or so low as to be regarded as negligible. An area classification established in this way provides a basis for the selection of electrical apparatus that is protected to a degree appropriate to the risk involved. The type of protection of the apparatus selected will be such that the likelihood of it being a source of ignition, at the same time as the surrounding atmosphere is explosive, is accepted as being small.

NOTES

1 Flammable materials for the purpose of area classification include,

a) petroleum having flash point below 65°C or any flammable gas or vapour in a concentration capable of ignition; and
b) petroleum or any flammable liquid having flash point above 65°C where likely to be refined, blended, handled or stored at or above its flash point.

2 For the purpose of this standard an area is a three dimensional region or space.

3 Normal atmospheric conditions include variations above and below reference levels of 101.3 kPa (1 013 mbar) and 20°C provided the variations have a negligible effect on the explosion properties of the flammable materials.

4 Catastrophic failures in this context is applied, for example, to the rupture of a process vessel or pipeline and events that are not predictable.

5 In any plant installation irrespective of size there may be numerous sources of ignition apart from those associated with electrical apparatus. Additional precautions may be necessary to ensure safety in this aspect but these are outside the scope of this standard.

6 Mists may form or be present at the same time as flammable vapours. This may affect the way flammable material disperses and the extent of any hazardous areas. The strict application of area classification for gases and vapours may not be appropriate because the flammability characteristics of mists are not always predictable. Whilst it can be difficult to decide upon the type and extent of zones, the criteria applicable to gases and vapours will, in most cases, give a safe result. However, special consideration should always be given to the danger of ignition of flammable mists.

7 For the purpose of this standard, the terms flammable and explosive may be considered as synonymous.

2 REFERENCES

The following referred standard is indispensable for the application of this standard:

IS/IEC No.	*Title*
60079-20 : 1996	Electrical apparatus for explosive gas atmospheres — Part 20: Data for flammable gases and vapours, relating to the use of electrical apparatus
60079-0 : 2004	Electrical apparatus for explosive gas atmospheres — Part 0 General requirements

3 TERMINOLOGY

3.1 Explosive Gas Atmosphere — A mixture with air, under normal atmospheric conditions, of flammable materials in the form of gas, vapour, or mist, in which, after ignition, combustion spreads throughout the unconsumed mixture.

NOTES

1 This definition specifically excludes dusts and fibres in suspension in air.

2 Although a mixture which has a concentration above the upper explosive limit (UEL) is not an explosive gas atmosphere, in certain cases for area classification purposes it is advisable to consider it as an explosive gas atmosphere.

3.2 Hazardous Area — An area in which an explosive gas atmosphere is present, or likely to be present, in quantities such as to require special precautions for the construction, installation and use of electrical apparatus.

3.3 Non-hazardous Area — An area in which an explosive gas atmosphere is not expected to be present in quantities such as to require special precautions for the construction, installation and use of electrical apparatus.

3.4 Zones — Hazardous areas are classified in zones based upon the frequency of the appearance and the duration of an explosive gas atmosphere as follows.

3.4.1 *Zone* 0 — An area place in which an explosive atmosphere is present continuously or for long periods or frequently.

3.4.2 *Zone* 1 — An area in which an explosive atmosphere is likely to occur in normal operation occasionally.

3.4.3 *Zone* 2 — An area in which an explosive atmosphere is not likely to occur in normal operation but, if it does occur, will persist for a short period only.

3.5 Normal Operation — The situation when the plant equipment is operating within its design parameters.

NOTES

1 Minor releases of flammable material may be part of normal operation. For example, releases from seals which rely on wetting by the fluid being pumped are considered to be minor releases.

2 Failures (such as the breakdown of pump seals, flange gaskets or spillages caused by accidents) which involve urgent repair or shutdown are not considered to be part of normal operation nor are they considered to be catastrophic.

3 Normal operation includes start-up and shutdown conditions.

3.6 Explosive Limits

3.6.1 *Lower Explosive Limit (LEL)* — The concentration of flammable gas, vapour or mist in air, below which an explosive gas atmosphere will not be formed.

3.6.2 *Upper Explosive Limit (UEL)* — The concentration of flammable gas, vapour or mist in air, above which an explosive gas atmosphere will not be formed.

3.7 Relative Density of a Gas or a Vapour — The density of a gas or a vapour relative to the density of air at the same pressure and at the same temperature (air is equal to 1.0).

3.8 Flammable Material — Material consisting of flammable gas, vapour, liquid and/or mist (*see* 5).

3.9 Flammable Gas or Vapour — Gas or vapour which, when mixed with air in certain proportions, will form an explosive gas atmosphere.

3.10 Flammable Liquid — A liquid capable of producing a flammable vapour or mist under any foreseeable operating conditions.

3.11 Flammable Mist — Droplets of flammable liquid, dispersed in air, so as to form an explosive atmosphere.

3.12 Flash Point — The temperature at which the liquid gives so much vapour that this vapour, when mixed with air, forms an ignitable mixture and gives a momentary flash on application of a small pilot flame under specified conditions of test.

3.13 Boiling Point — The temperature of a liquid boiling at an ambient pressure of 101.3 kPa (1 013 mbar).

NOTE — For liquid mixtures the initial boiling point should be used. 'Initial boiling point' is used for liquid mixtures to indicate the lowest value of the boiling point for the range of liquids present.

3.14 Ignition Temperature — The lowest temperature at which ignition occurs in a mixture of explosive gas and air when the method of testing ignition temperatures specified in relevant Indian Standard is followed.

3.15 Source of Release — A source of release is a point or location from which gas, vapour, mist or liquid may be released into the atmosphere so that a hazardous atmosphere could be formed.

3.16 Adequate Ventilation — Adequate ventilation is that which is sufficient to prevent accumulations of significant quantities of gas-air mixtures in concentration over one-fourth of the lower explosive limit. Adequately ventilated area could be naturally ventilated or artificially ventilated.

3.17 Protected Fired Vessel — Any fired vessel that is provided with equipment, such as flame arrestors, stack temperatures shutdowns, forced draft burners with safety controls and spark arrestors, designed to eliminate the air intake and exhaust as sources of ignition.

3.18 Pressurized Room — A room which has been made safe by pressurizing or purging with a plenum of safe atmosphere by keeping minimum 25 Pa more pressure than that of surrounding atmosphere with all doors and windows closed.

4 GENERAL

4.1 Area classification is a method of analyzing and classifying the environment where explosive gas atmospheres may occur to allow the proper selection of electrical apparatus to be installed in that environment.

4.2 The objective of the classification procedure is to enable electrical apparatus to be selected, installed, operated and maintained safely in these environments.

4.3 Where it is necessary to use electrical apparatus in an environment in which there may be an explosive gas atmosphere, the following steps should be taken:

a) eliminate the likelihood of an explosive gas atmosphere occurring around the source of ignition; or

b) eliminate the source of ignition.

Where this is not possible, protective measures, process equipment, systems and procedures should be selected and prepared so the likelihood of the coincidence of (a) and (b) is so small as to be acceptable.

4.4 In most practical situations where flammable materials are used it is difficult to ensure that an explosive gas atmosphere will never occur. It may also be difficult to ensure that electrical apparatus will never give rise to a source of ignition. Therefore in situations where an explosive gas atmosphere has a high likelihood of occurring, reliance is placed on using electrical apparatus which has an extremely low likelihood of creating a source of ignition. Conversely where the likelihood of an explosive gas atmosphere occurring is reduced, electrical apparatus which has an increased likelihood of becoming a source of ignition may be used. To apply this approach the first step is to assess the likelihood of an explosive gas atmosphere occurring in accordance with the definitions of Zone 0, Zone 1 and Zone 2. The following clauses give guidance of this first step, namely, on the classification of areas in which there may be an explosive gas atmosphere into Zones 0, 1 and 2.

5 CLASSIFICATION OF HAZARDOUS AREA

5.1 To determine the type of electrical installation appropriate to a particular situation, the hazardous areas have been divided into three zones, namely, Zone 0, Zone 1 and Zone 2, according to the degree of probability of the presence of hazardous atmosphere. Typical examples of such classifications are given below.

5.1.1 *Zone 0 Areas*

Examples are vapour space above closed process vessels, storage tanks or closed containers, areas containing open tanks of volatile, flammable liquid.

5.1.2 *Zone 1 Areas*

Zone 1 locations may be distinguished when any of the following conditions exits:

a) Flammable gas or vapour concentration is likely to exist in the air under normal operating conditions;

b) Flammable atmospheric concentration is likely to occur frequently because of maintenance, repairs or leakage;

c) Failure of process, storage or other equipment is likely to cause an electrical system failure simultaneously with the release of flammable gas or liquid;

d) Flammable liquid or vapour piping system (containing valves, meters or screwed or flanged fittings) is in an inadequately ventilated area; and

e) The area below the surrounding elevation or grade is such that flammable liquids or vapours may accumulate therein.

This classification typically includes:

a) Imperfectly fitting peripheral seals on floating roof tanks;

b) Inadequately ventilated pump rooms for flammable gas or for volatile, flammable liquids;

c) Interiors of refrigerators and freezers in which volatile flammable materials are stored in lightly stoppered or easily ruptured containers;

d) API separators;

e) Oily waste water sewer/basins;

f) LPG cylinder filling and cylinder evacuation area; and

g) Areas in the immediate vicinity of vents and filling hatches.

5.2 Zone 2 Areas

Zone 2 locations may be distinguished when any one of the following conditions exist:

a) The system handling flammable liquid or vapour is in an adequately ventilated area and is so designed and operated that the explosive or ignitable liquids, vapours or gases will

normally be confined within closed containers or closed systems from which they can escape only during abnormal conditions such as accidental failure of a gasket or packing;

b) The flammable vapours can be conducted to the location as through trenches, pipes or ducts;

c) Locations adjacent to zone 1 areas; and

d) In case of use of positive mechanical ventilation, as the failure or abnormal operation of ventilating equipment can permit atmospheric vapour mixtures to build up to flammable concentrations.

5.3 Areas not Classified

In general, the following locations are considered safe from the point of view of electrical installation:

a) Areas where the piping system is without valves, fittings, flanges or similar appurtenances;

b) Areas where flammable liquids or vapours are transported only in suitable containers or vessels;

c) Areas where permanent ignition sources are present like area where combustion gases are present, for example flare tips, flare pits, other open flames and hot surfaces;

d) Enclosed premises in which a plenum or purging stream of safe atmosphere is continuously maintained, so that no opening therein may be a point of ingress of gases or vapours coming from an external source of hazard;

e) Gas turbine installation meeting requirements of Annex A;

f) Rooms/sheds for housing internal combustion engines, having adequate ventilation; and

g) Oil/gas fired boilers installations. Consideration should be given, however, to potential leak sources in pumps, valves, etc, or in waste product and fuel lines feeding flame or heat producing equipment to avoid installing electrical devices which could then become primary ignition sources for such leaks.

NOTES

1 A protected fired vessel is not considered a source of ignition and the surrounding area is classified the same as for a hydrocarbon pressure vessel.

2 The area around the fired components and exhaust outlets of unprotected fired vessels need not be classified from the standpoint of installation of electrical equipment.

3 The area around a flare tip or flare pit need not be classified from the stand point of installation of electrical equipment. However the area classification for the associated equipment (for example, knock out drum, blow down pump etc) located at grade level shall be followed as applicable

4 Lack of classification around unprotected fired vessels and flare tips does not imply the safe placement of fired vessels and flare tips in the proximity to other production equipment because those are themselves sources of ignition.

5 Electrical equipment may be exposed to flammable gas during a purge cycle of a fired heater or furnace.

5.4 The area classification shall also take into consideration of gas group and temperature classification, depending on the properties of material handled, as given in Annex B and Annex C.

Where zones created by adjacent sources of release overlap and are of different zonal classification, the higher risk classification will apply in the area of overlap. Where overlapping zones are of the same classification, this common classification will normally apply. However, care needs to be taken where the overlapping zones relate to flammable materials which have different apparatus groups and/or temperature class. So, for example, if a zone 1 IIA T3 area overlapped a zone 2 IIC T1 area, then classifying the overlap as zone 1 IIC T3 may be over-restrictive but classifying it as zone 1 IIA T3 or zone 1 IIC T1 would not be acceptable. In this situation, the area classification should be recorded as zone 1 IIA T3 and zone 2 IIC T1.

6 PROPERTIES OF FLAMMABLE MATERIAL

6.1 Flammable substances, the potential release of which shall be considered in area classification for electrical installations, include permanent gases or fixed gases, liquefied petroleum gases, vapours of flammable liquids and liquefied natural gas (LNG).

6.2 Permanent gases or fixed gases commonly encountered include methane and its mixtures with small quantities of the low-molecular-weight hydrocarbons, the mixtures being generally lighter than air. Hydrogen, because of its properties, shall be given special consideration.

6.3 Many of the permanent gases or fixed gases released from an opening of given size will dissipate rapidly because of their low relative density and will not usually affect as wide an area as the liquefied petroleum gases.

6.4 Liquefied petroleum gases include propane, butane and mixtures thereof having densities from 1.5 to approximately 2.0 times that of air. Vapour pressures exceed 2.81 kg/cm^2 at 37.8°C.

6.5 These gases in their liquefied state are highly volatile and have low boiling temperature so that they readily pick up heat creating large volumes of vapour.

They should be treated very conservatively in considering the extent of areas affected, especially since the heavy vapours travel along the ground for long distances if air currents do not assist diffusion.

6.6 Flammable liquids vary in volatility and have a flash point below 93°C and a vapour pressure not exceeding 2.81 kg/cm^2 at 37.8°C. These are divided into three classes, as follows,

a) Class A : Flammable liquids having flash point below 23°C
b) Class B : Flammable liquids having flash point 23°C and above but below 65°C
c) Class C : Flammable liquids having flash point 65°C and above but below 93°C

Densities of the saturated vapours of these flammable liquids at ordinary atmospheric temperatures are generally less than 1.5 times that of air.

6.7 Class A liquids may produce large volumes of vapour when released in appreciable quantities to the open.

6.8 Class B liquids are heavier and less volatile than gasoline, but have flash point at or slightly below normal ambient air temperatures. Few commercial products are in this class, although in a refinery some stocks in the process of refining will be of Class B. At normal storage temperature such oils release vapour slowly and are hazardous only near the surface of the liquid. At elevated temperatures Class B liquids approach the characteristics of Class A liquids in vapour release.

6.9 Class C includes a broad range from cleaners' solvent to heavy fuel oil in commercial grades. The degree of hazard is low because the rate of vapour release is nil at normal ambient temperatures of handling and storage. When vapours from heated Class C products in process are released to the atmosphere, the chance of ignition by electrical equipment is not as great as in case of Class A or Class B liquids because vapour either condense rapidly or ignite spontaneously.

6.10 Normally, Class A and Class B liquids will produce vapours considered to be in the flammable range for electrical design purposes. Class C liquids should be considered as producing flammable vapours when handled, processed or stored under such conditions that the temperature of the liquid, when released to the atmosphere, would exceed its flash point.

6.11 Cryogenic liquids are generally handled below (–) 101°C. These behave like flammable liquids when they are spilled. Small liquid spills will immediately vaporise, but larger spills may remain in the liquid state for an extended time. As the liquid absorbs heat, it vaporizes and could form an ignitable mixture. Some liquefied combustible materials (not cryogenic) are stored at low temperatures and at pressures close to atmospheric pressure; these include anhydrous ammonia, ethane, ethylene and propylene. These materials will behave like lighter or heavier than air as per their properties.

6.12 Liquefied natural gas (LNG) exhibits a special property. At atmospheric pressure, natural gas can be liquefied by reducing its temperature to approximately (–)162°C. Upon release from the container to the atmosphere, LNG will vaporise and release gas that, at ambient temperature, has about 600 times the volume of liquid. Generally, at temperatures below approximately (–)112°C, the cold gas is heavier than ambient air at 15.6°C. However as its temperature rises, it becomes lighter than air.

6.13 A lighter-than-air gas/vapour that has been cooled sufficiently could behave as a heavier-than-air gas/vapour. Accordingly cold vapours may need to be treated as heavier than air. Similarly a heavier-than-air gas/vapour that has been heated sufficiently to decrease its density could behave as a lighter-than-air gas/vapour until cooled by the surrounding atmosphere. Hence for deciding the extent of area classification, conservative approach shall be adopted for dealing with such special case.

6.14 Detailed information on characteristics of flammable liquids, vapours and gases are given in Annex B and Annex C.

7 EXTENT OF HAZARDOUS AREA

7.1 *General Consideration*

7.1.1 In the absence of wall, enclosures, or other barriers, and in the absence of air currents or similar disturbing forces, gases and vapours disperse in all directions as governed by the vapour density and velocity, for example, heavier-than-air vapour disperse principally downward and outward and lighter-than-air vapours principally upward and outward. Thus, if the source of hazard were a single point, the horizontal area covered by the vapour would be a circle.

7.1.2 For vapours released at or near ground level, the areas where potentially hazardous concentrations are most likely to be found are below ground, those at ground are next most likely, and, as the height above ground increases, the potential hazard decreases.

NOTE — For lighter-than-air gases the opposite is true, there being little or no potential hazard at and below ground and greater potential hazard above ground.

7.1.3 Elevated or depressed sources of release will alter the areas of potential hazard.

7.1.4 *Effect of Air Current*

Air currents may substantially alter the outline of the limits of potential hazard. A very mild breeze may serve to extend the area in those directions to which vapours might normally be carried. However, a stronger breeze may so accelerate the dispersion of vapours that the extent of potentially hazardous area would be greatly reduced.

7.1.5 Guidelines on effect of ventilation on hazardous area classification are covered in Annex D.

7.1.6 The extent of classified area is covered in **7.2**, **7.3** and **7.4**. The distances given in various figures may be used with judgement with considerations given to all factors discussed in this standard.

7.2 Heavier-than-Air Gases and Vapours (Relative Density ≥ 0.75)

7.2.1 *Open-Air Situations*

a) Figures H1 and H2 illustrate the situation when a source of hazard which may give rise to a hazardous atmosphere only under abnormal conditions is located in the open air. The hazardous area should in this case be classified as Zone 2.

   If the source of hazard gives rise to a hazardous atmosphere under normal operating conditions, the area described in Fig. H1 and Fig. H2 Zone 2 should be classified as Zone 1.

b) In case of petroleum pipelines where well maintained valves, fittings, and meters of a pipeline system transporting petroleum (crude oil, products, and gases) are installed in well-ventilated situations or in a pit, the extent of the Zone 2 area above ground may be reduced to 3 m in all directions from the possible source of hazard, although the pit itself should be classified as Zone 1 area.

7.2.2 *Enclosed Premises and Surrounding Areas*

Figures H3 and H4 illustrates the situation when a source of hazard which may give rise to a hazardous atmosphere under abnormal conditions is located within enclosed premises.

If the source of hazard within the enclosed premises gives rise to hazardous atmosphere under normal conditions, the area within the building as Zone 2 in Fig. H4 should be classified as Zone 1.

7.2.3 *Atmospheric Storage Tanks*

Figures H5, H6 and H7 illustrates the classification of the area surrounding floating-roof tank, fixed roof tank with and without nitrogen blanketing in offsite storage areas under normal operating conditions.

7.2.4 *Pressure Storage Vessels*

Figures H8 and H9 illustrates the classification of the area surrounding pressure storage (spheres and bullets) under normal operating conditions.

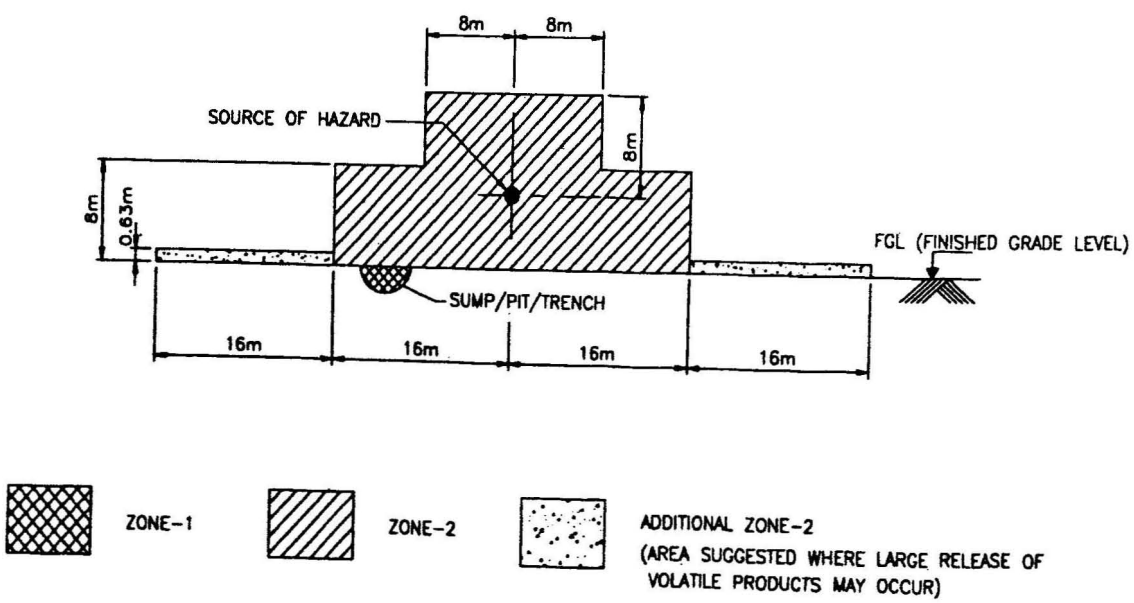

FIG. H1 FREELY VENTILATED PROCESS AREA (HEAVIER-THAN-AIR GASES OR VAPOURS) (SOURCE OF HAZARD LOCATED NEAR GROUND LEVEL)

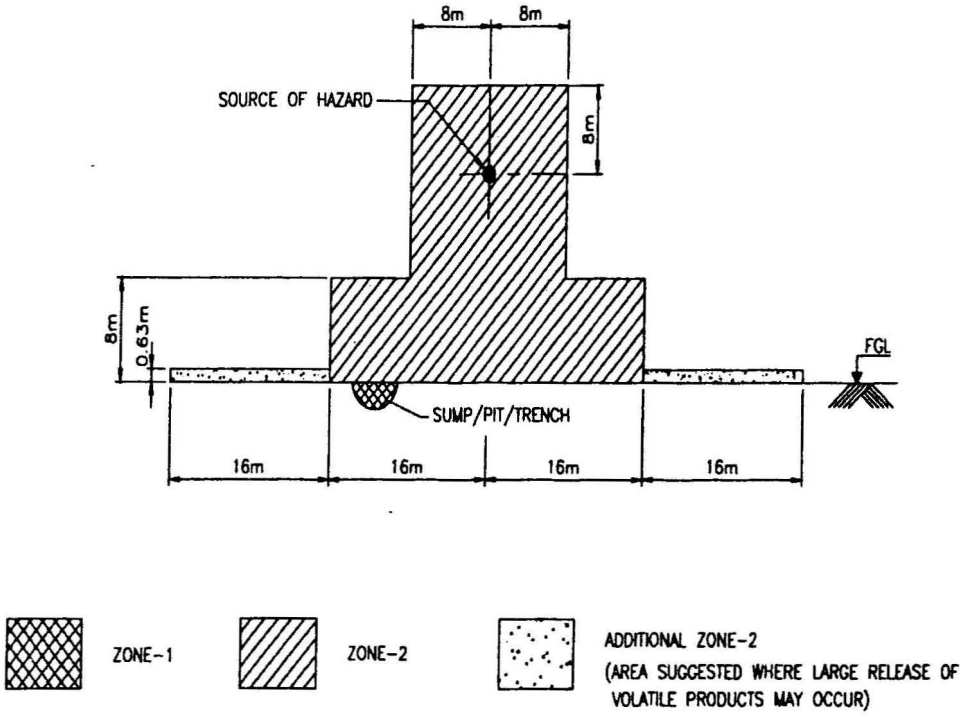

FIG. H2 FREELY VENTILATED PROCESS AREA (HEAVIER-THAN-AIR GASES OR VAPOURS) (SOURCE OF HAZARD LOCATED ABOVE GROUND LEVEL)

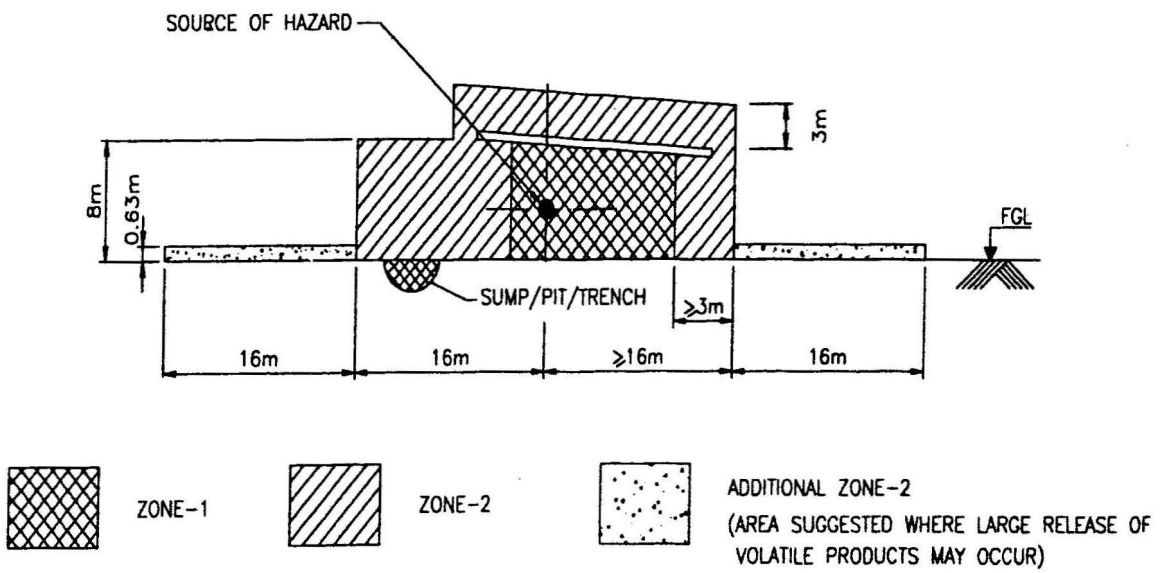

FIG. H3 PROCESS AREA WITH RESTRICTED VENTILATION

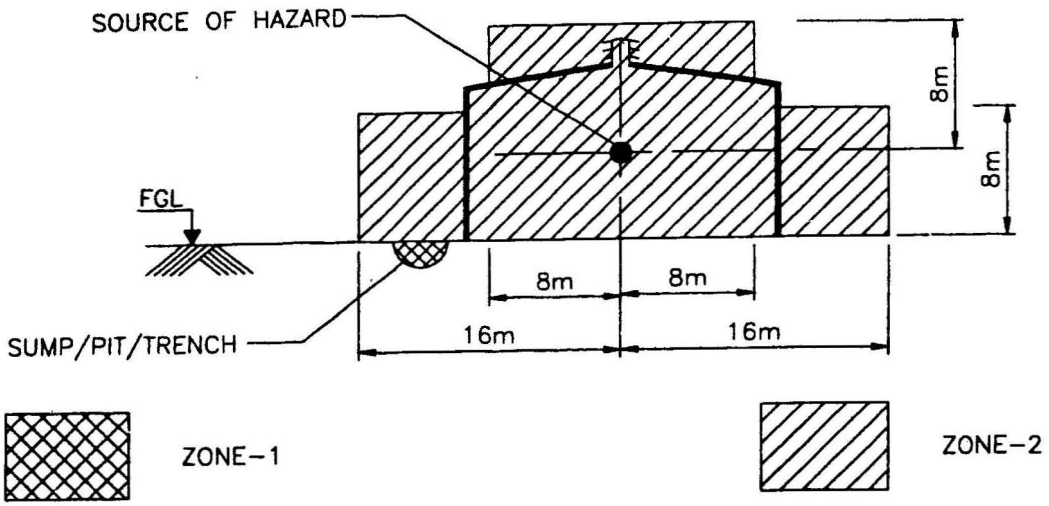

FIG. H4 WELL VENTILATED INDOOR AREA (HEAVIER-THAN-AIR GASES OR VAPOURS)

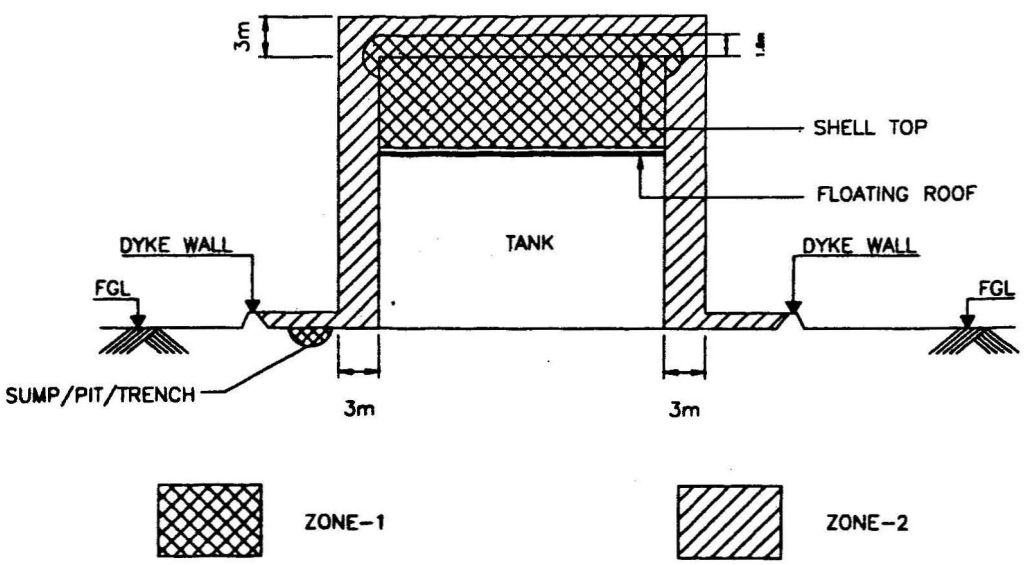

FIG. H5 TANK WITH FLOATING ROOF WITH OR WITHOUT PROTECTIVE CONE ROOF

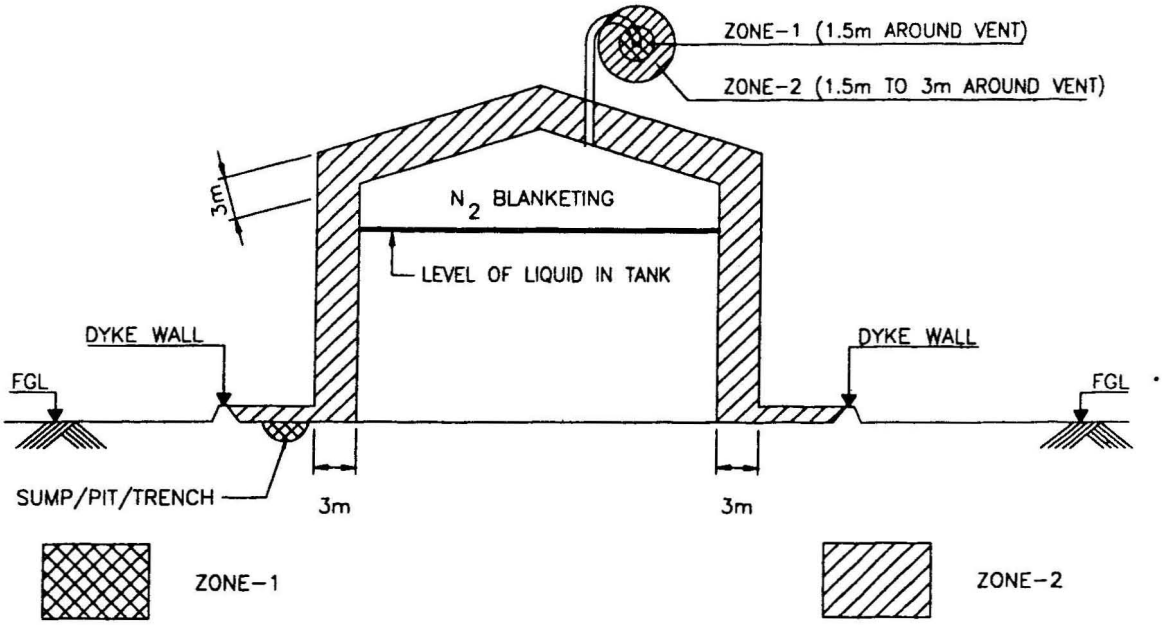

FIG. H6 FIXED ROOF TANK (WITH N_2 BLANKETING)

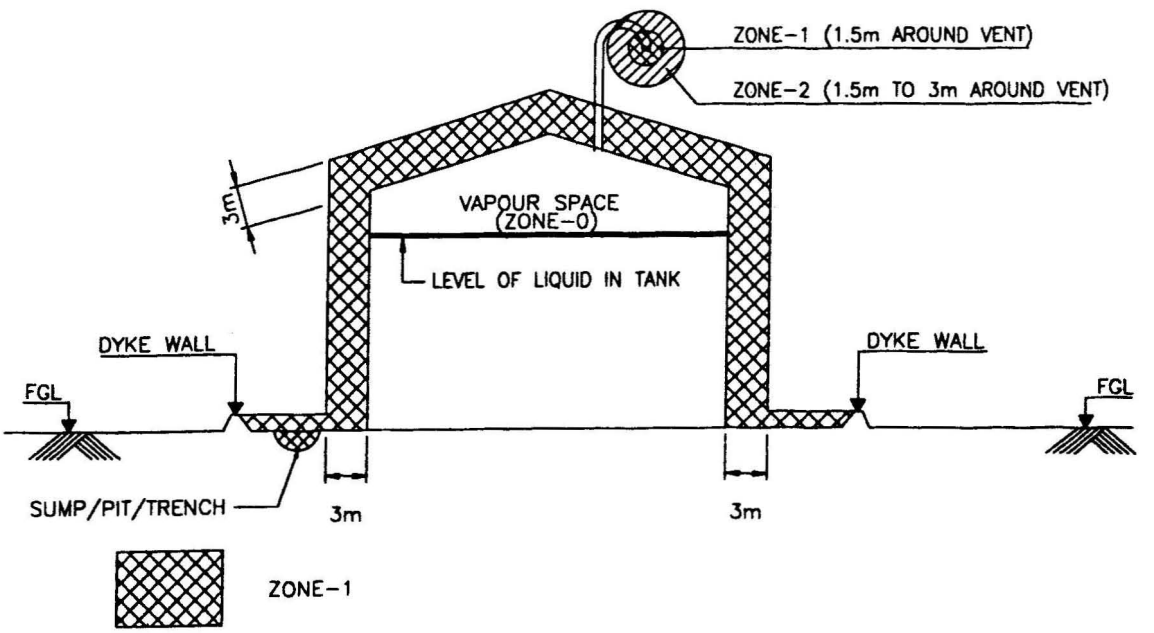

FIG. H7 FIXED ROOF TANK (WITHOUT N_2 BLANKETING)

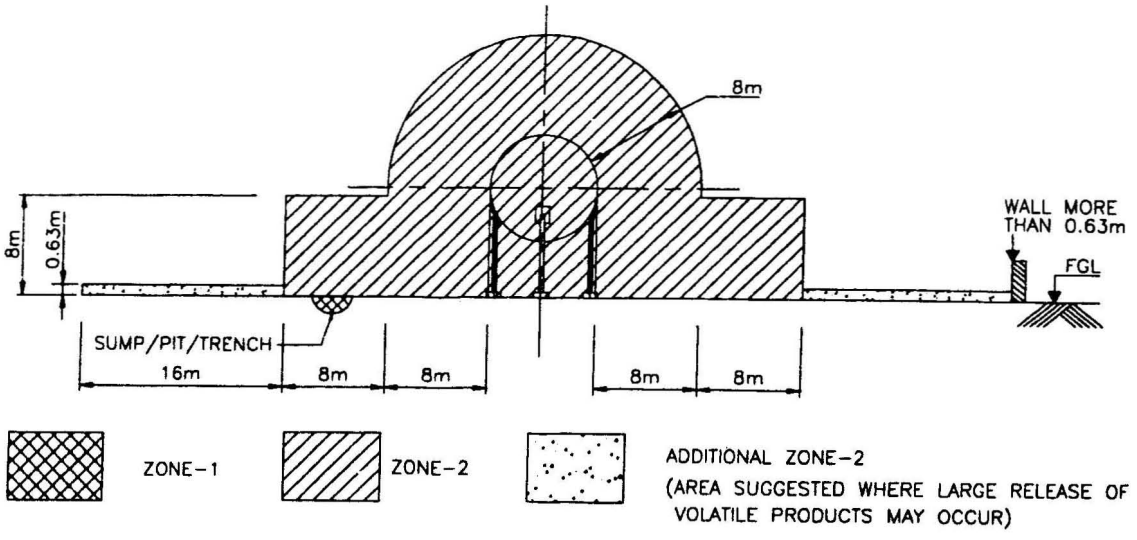

FIG. H8 PRESSURE STORAGE TANK (SPHERE) (HEAVIER-THAN-AIR GASES OR VAPOUR)

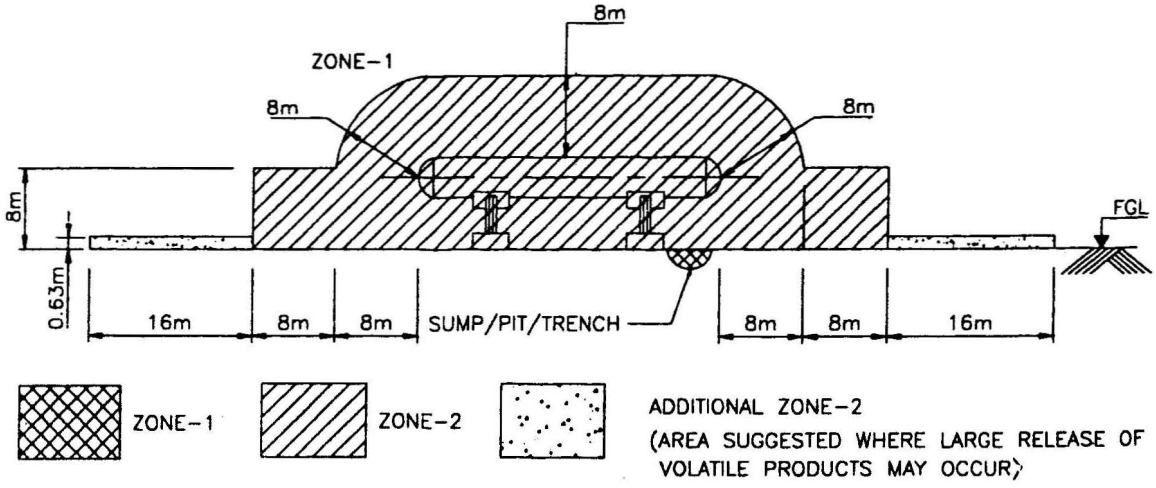

FIG. H9 PRESSURE STORAGE TANK (BULLET) (HEAVIER-THAN-AIR GASES OR VAPOUR)

7.2.5 *Mounded Storage*

The underground mounded storage shall not be considered as a source of hazard for the purpose of area classification. However the area extending to 3 m. in all directions surrounding the associated appurtenances (valves, fittings, meters, etc) located above ground shall be classified as Zone 2 area.

7.3 Lighter-than-Air Gases and Vapours

Where a substantial volume of gas or vapour is released into the atmosphere from a localized source, a vapour density less than one, that is, lighter-than-air, for the combustible indicates the gas or vapour will rise in a comparatively still atmosphere. A vapour density greater than one, that is heavier-than-air, indicates the gas or vapour will tend to sink, and may thereby spread some distance horizontally and at a low level. The latter effects will increase with compounds of greater vapour density.

In process industries, the boundary between compounds which may be considered lighter-than-air is set at a vapour density of 0.75. This limit is chosen so as to provide a factor of safety for these compounds whose densities are close to that of air, and where movement may not therefore, be predicted without a detailed assessment of local conditions.

7.3.1 *Open Air Situations*

a) Figure L1 illustrate the situation when a source of hazard which may give rise to a hazardous atmosphere only under abnormal conditions is located in the open air. The hazardous area should in this case be classified as Zone 2.

If the source of hazard gives rise to a hazardous atmosphere under normal operating conditions, the area described in Fig. L1 as Zone 2 should be classified as Zone 1.

b) In case of petroleum pipelines where well maintained valves, fittings, and meters of a pipeline system transporting gases are installed in well-ventilated situations or in a pit, the extent of the Zone 2 area above ground may be reduced to 3 m in all directions from the possible source of hazard.

7.3.2 *Source of Hazard Located Inside Enclosed Premises*

Figures L2 to L6 illustrates the situation when a source of hazard which may give rise to a hazardous atmosphere under abnormal conditions is located within enclosed premises.

If the source of hazard within the enclosed premises gives rise to hazardous atmosphere under normal conditions, the area within the buildings as Zone 2 in Fig. L2 to L6 should be classified as Zone 1.

7.4 Miscellaneous Installations

7.5 For typical installations encountered in plants and jetties handling oil and gas, area classification for certain additional cases are given in the following figures:

Fig. M1 : Storage for cryogenic liquids.
Fig. M2 : Cooling towers for cooling water associated with equipment handling flammable material.
Fig. M3 : Wagon/truck loading/unloading system for flammable liquids.
Fig. M4 : Wagon/truck loading/unloading system for liquefied gas/compressed gas/cryogenic liquids.
Fig. M5 : Typical vent installation.
Fig. M6 : Typical drum dispensing installations.
Fig. M7 : Ball or Pig launching/receiving installation.

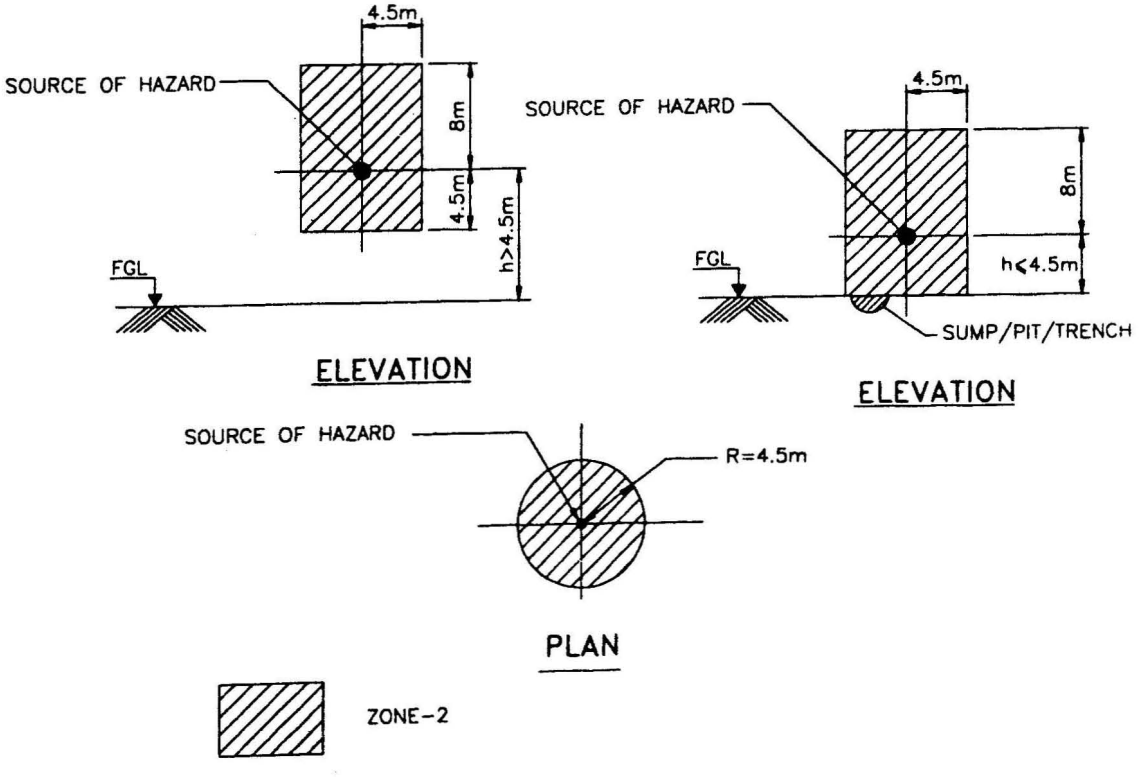

FIG. L1 FREELY VENTILATED PROCESS AREA (FOR LIGHTER-THAN-AIR GASES OR VAPOURS)

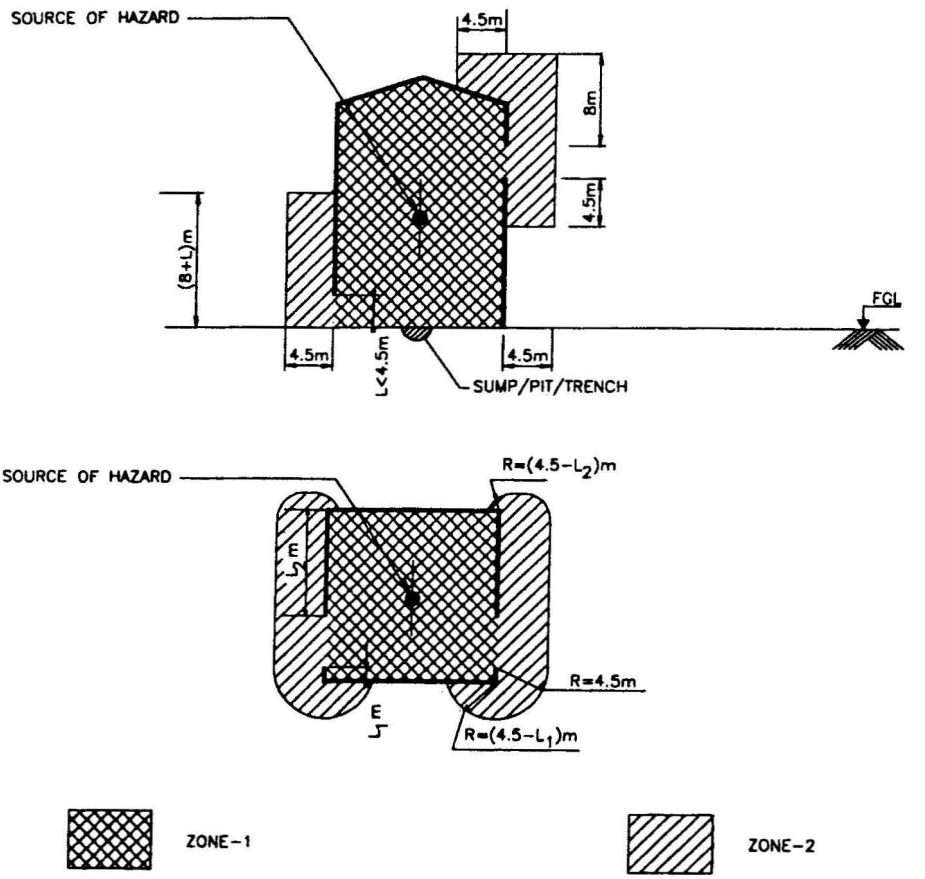

FIG. L2 SOURCE OF HAZARD LOCATED INSIDE ENCLOSED PREMISES WITH RESTRICTED VENTILATION (OPENINGS ON TOP AND BOTTOM) (LIGHTER-THAN-AIR GASES OR VAPOURS)

Fig. M8 : Separators, Dissolved Air Floatation (DAF) units and Biological Oxidation (BIOX) units.

Fig. M9 : Enclosed premises with internal source of release.

Fig. M10 : Jetties and Marine facilities.

7.5.1 The area within 1.5 m (extending in all directions) of safety vents, product sampling locations, process water drains, oily sewer vents, inspection hatches, discharge orifice of fixed liquid gauges, rotary or dip gauges, filler openings shall be classified as Zone 1. Further an area from 1.5 m to 3 m (extending in all directions) from vents shall be classified as Zone 2.

NOTE — However the vents, drains and inspection hatches etc blanked during normal operation and used only when the plant is de-pressurized or under shut down, should not be regarded as source of hazard.

7.5.2 Any trench or pit below ground level and located within the Zone 2 area should be classified as Zone 1 area, where heavier than air gases or vapours are being handled. However wide shallow depressions used for pumping complexes or pipe reservations may be classified as Zone 2 area.

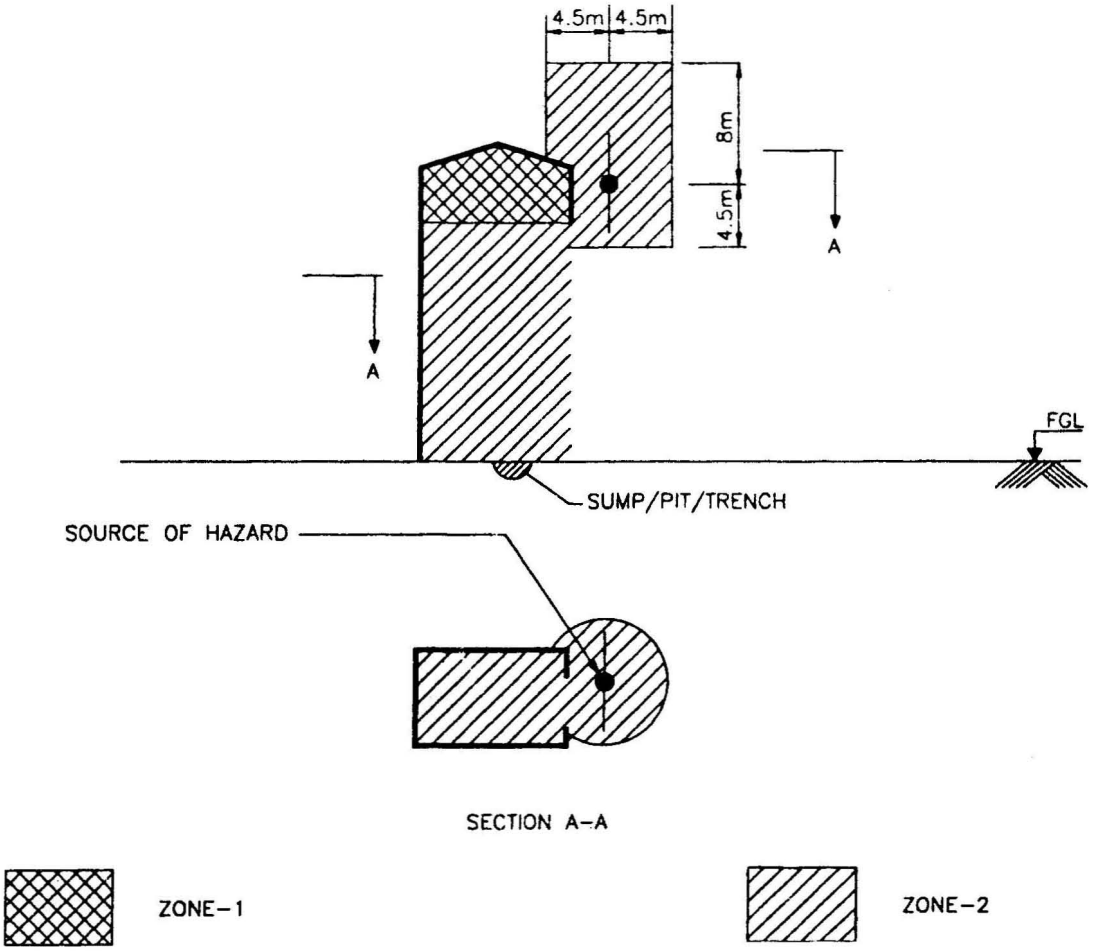

FIG. L3 SOURCE OF HAZARD LOCATED OUTSIDE THE ENCLOSURE WITH ONE SIDE OPEN (LIGHTER-THAN-AIR GASES OR VAPOURS)

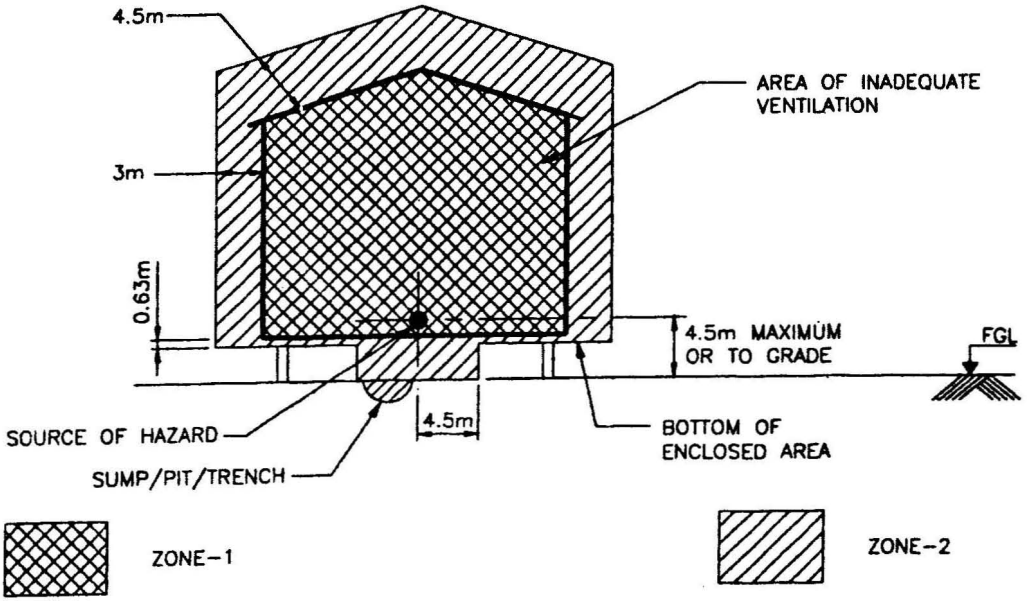

FIG. L4 INADEQUATELY VENTILATED COMPRESSOR SHELTER (LIGHTER-THAN-AIR GASES OR VAPOURS)

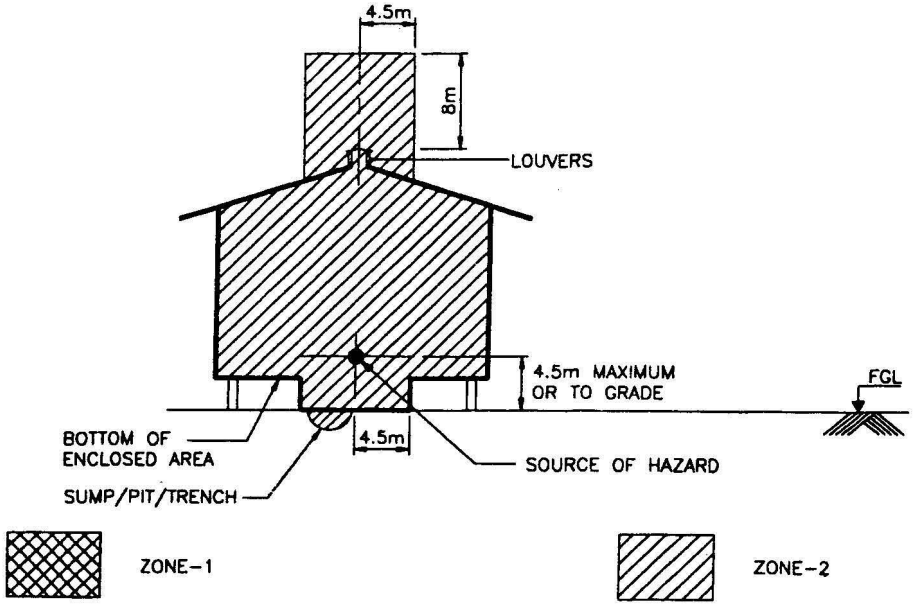

FIG. L5 ADEQUATELY VENTILATED COMPRESSOR SHELTER (LIGHER-THAN-AIR GASES OR VAPOURS)

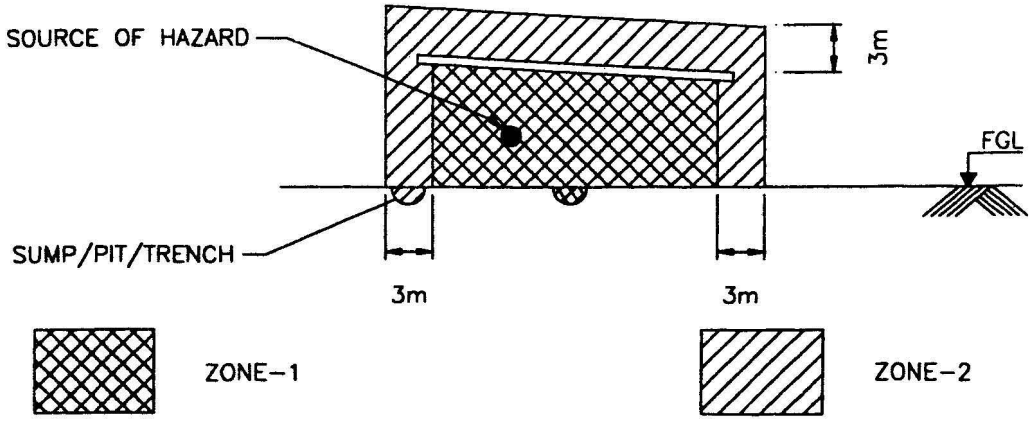

FIG. L6 PROCESS AREA WITH RESTRICTED VENTILATION (LIGHTER-THAN-AIR GASES OR VAPOURS)

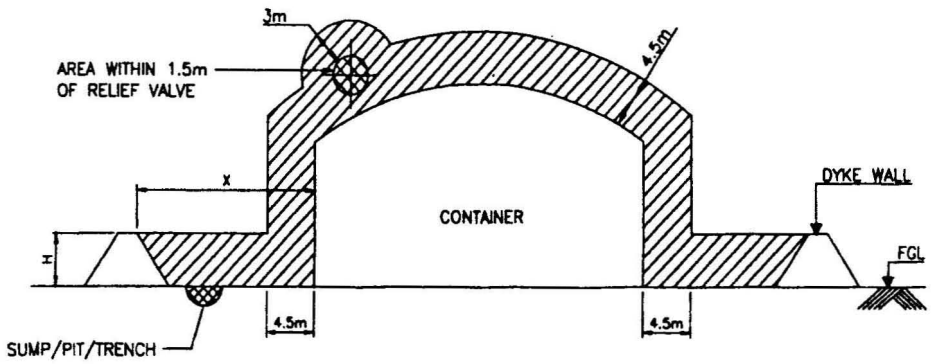

M1A Dyke Height Less than Distance from Container to Dyke (*H* Less than *X*)

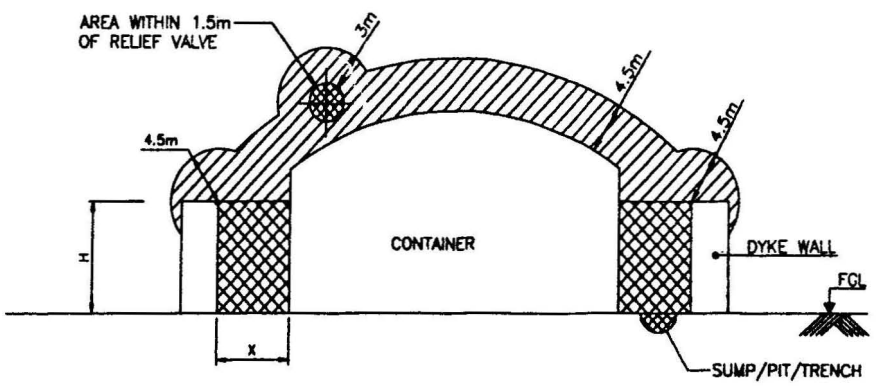

M1B Dyke Height Greater than Distance from Container to Dyke (*H* Greater than *X*)

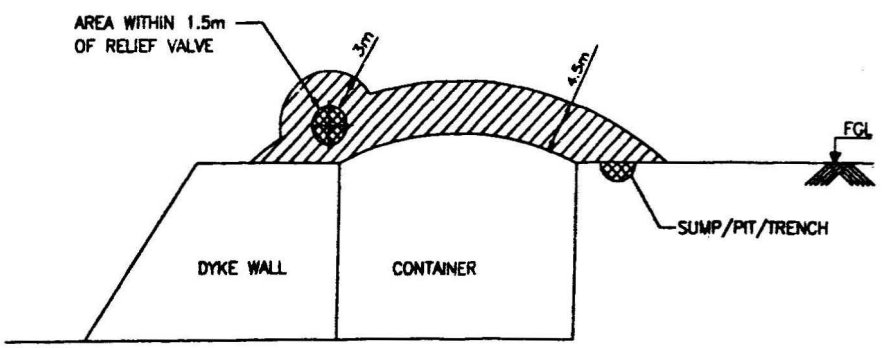

FIG. M1C
STORAGE BELOW GRADE

ZONE-1 ZONE-2

FIG. M1 STORAGE TANKS FOR CRYOGENIC LIQUIDS

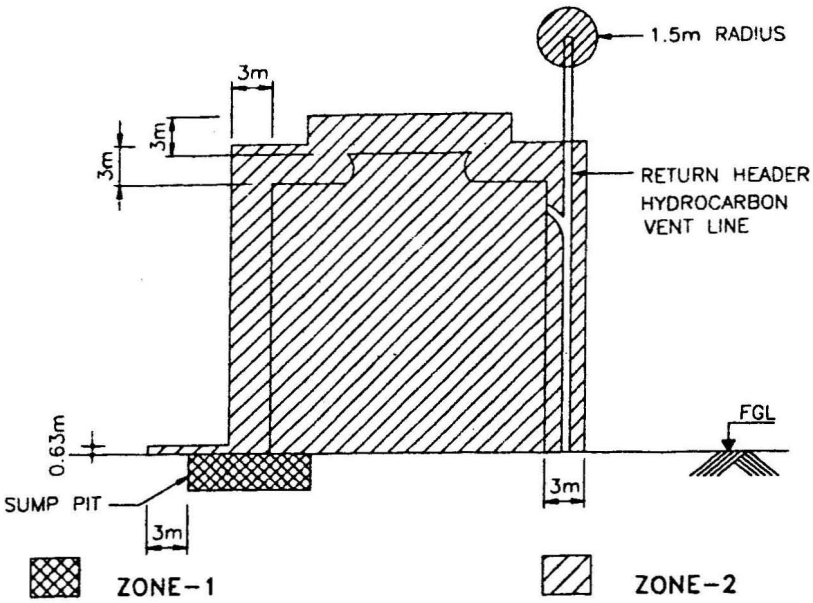

FIG. M2 COOLING TOWERS FOR COOLING WATER ASSOCIATED WITH EQUIPMENT HANDLING FLAMMABLE MATERIAL

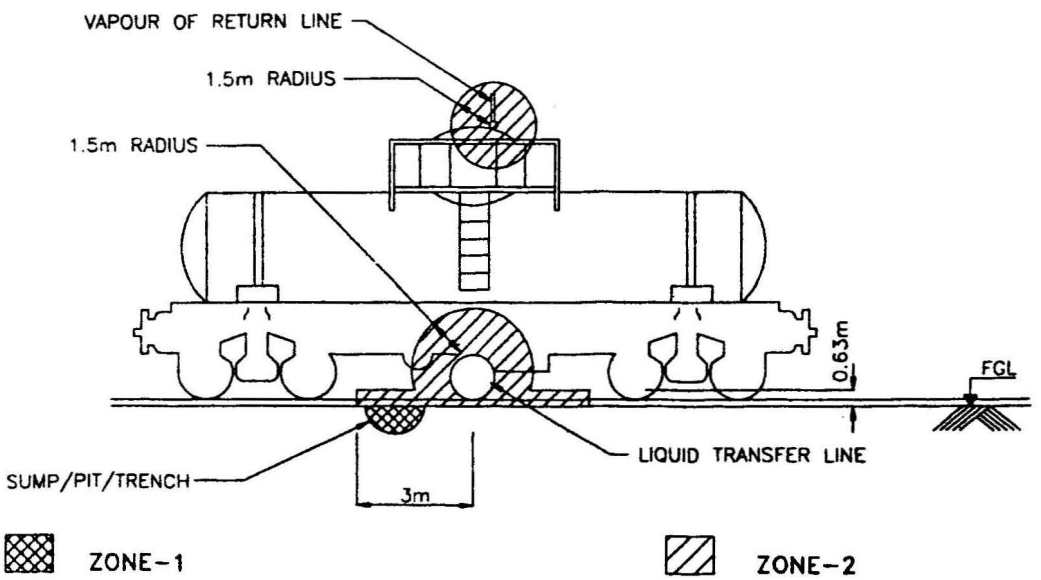

M3A (Material: Flammable Liquid) Wagon/Tank Truck Loading and Unloading via Closed System Bottom Product Transfer Only

FIG. M3 WAGON/TRUCK LOADING/UNLOADING SYSTEM FOR FLAMMABLE LIQUIDS (*Continued*)

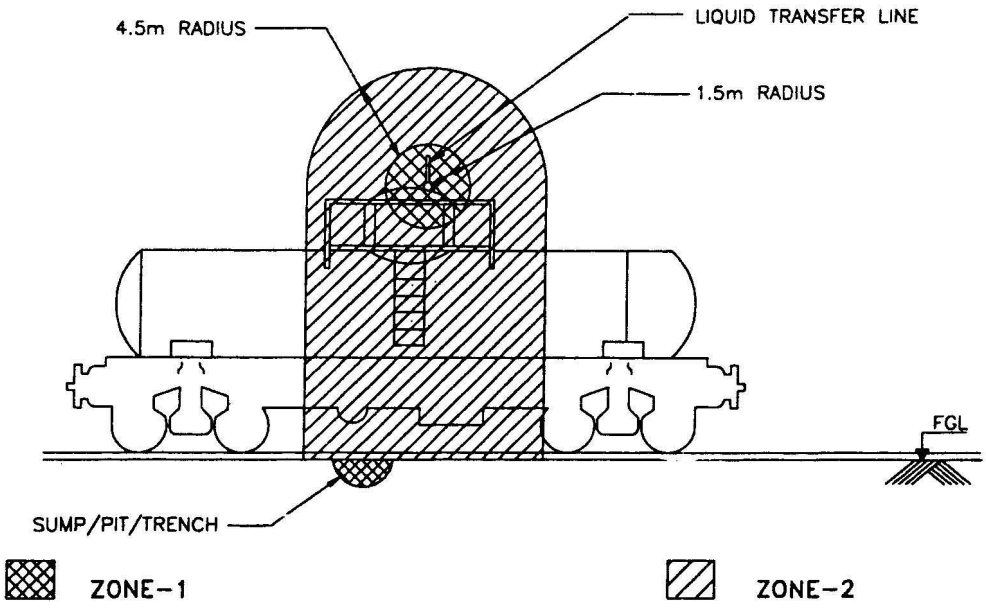

M3B (Material: Flammable Liquid)
Wagon/Tank Truck Loading and Unloading via Open System. Top or Bottom Product Transfer

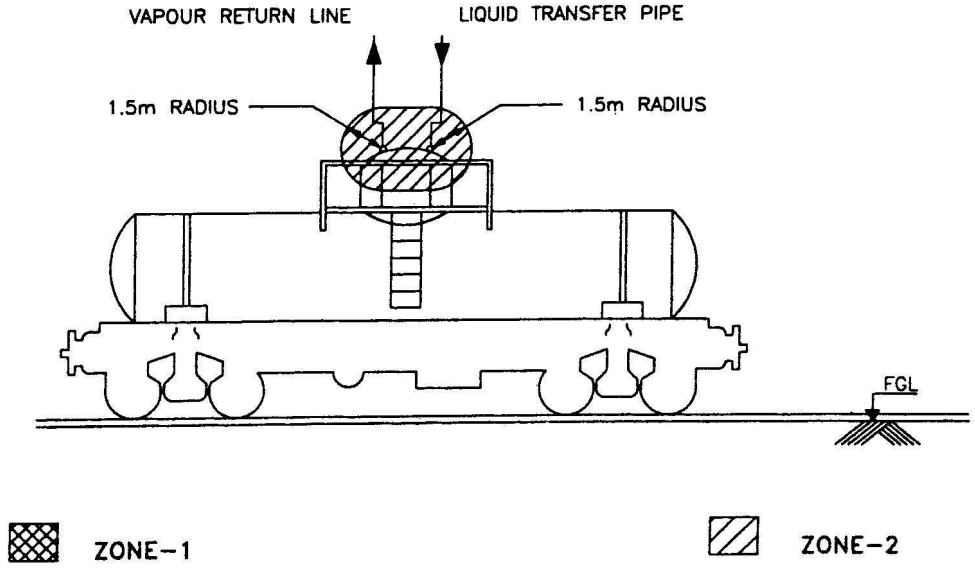

M3C (Material: Flammable Liquid)
Wagon/Tank Truck Loading and Unloading via Closed System. Product Transfer Through Dome Only

FIG. M3 WAGON/TRUCK LOADING/UNLOADING SYSTEM FOR FLAMMABLE LIQUIDS

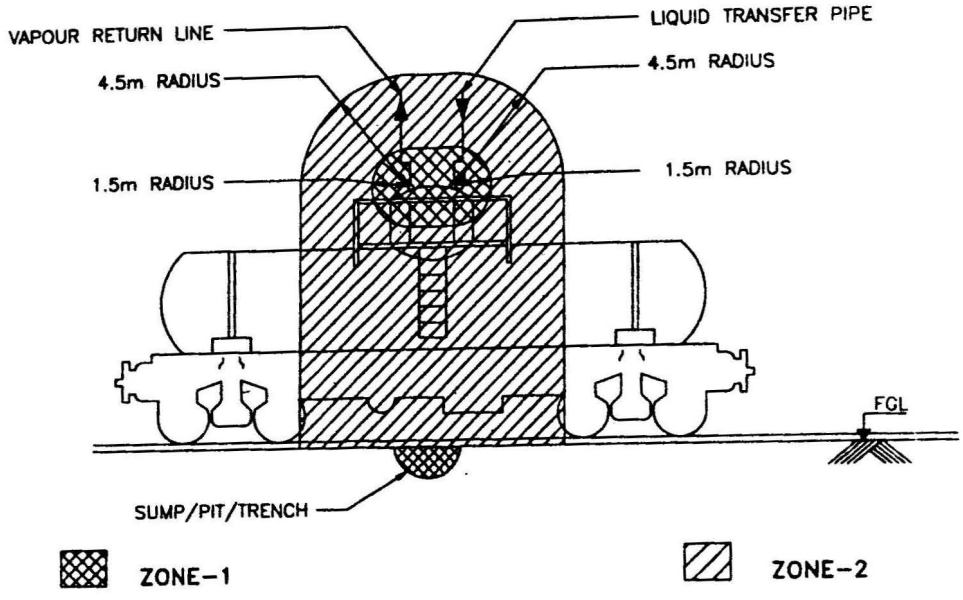

M4A (Material: Liquified Gas/Compressed Gas/Cryogenic Liquid)
Wagon/Tank Truck Loading and Unloading via Closed System. Product Transfer Through Dome Only

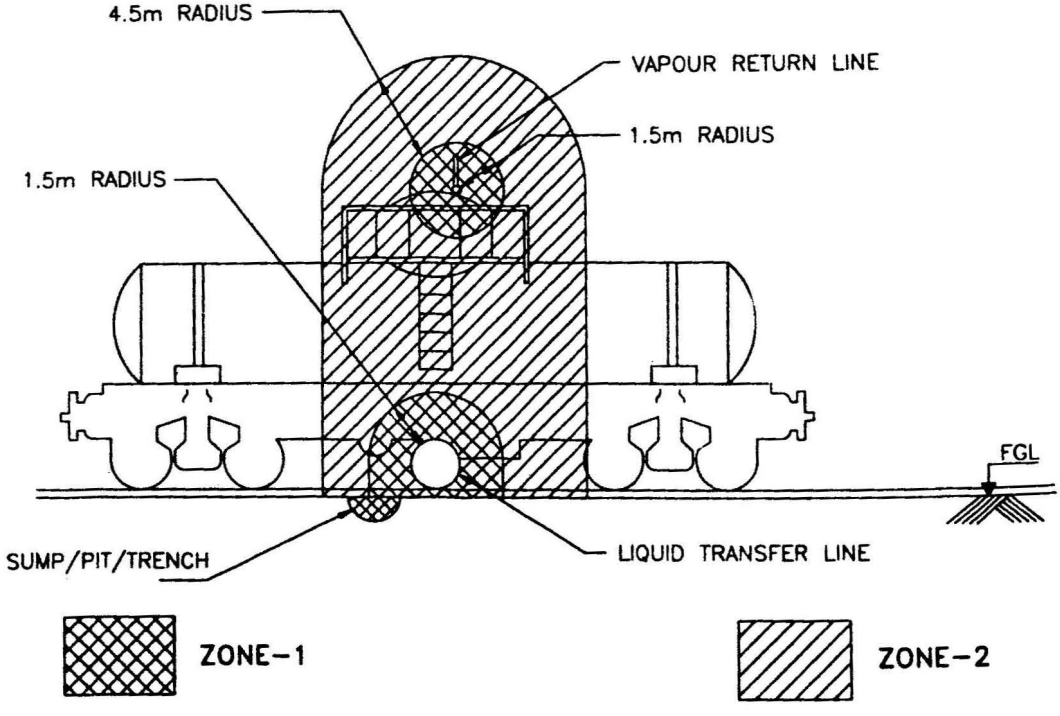

M4B (Material: Liquified Gas/Compressed Gas/Cryogenic Liquid)
Wagon/Tank Truck Loading and Unloading via Closed System. Procut Transfer Through Bottom Only

FIG. M4 WAGON/TRUCK LOADING/UNLOADING SYSTEM FOR LIQUEFIED GAS/COMPRESSED GAS/CRYOGENIC LIQUIDS

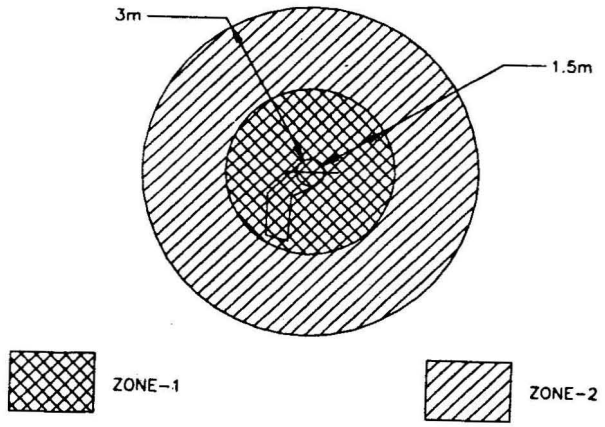

FIG. M5 TYPICAL VENT INSTALLATION

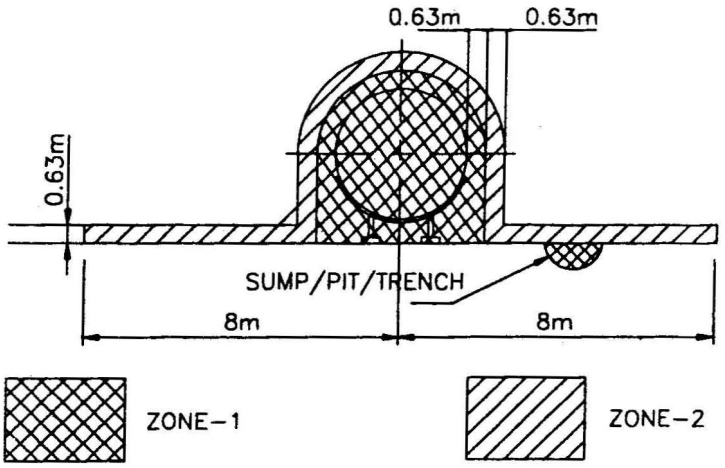

FIG. M6 TYPICAL DRUM DISPENSING INSTALLATION

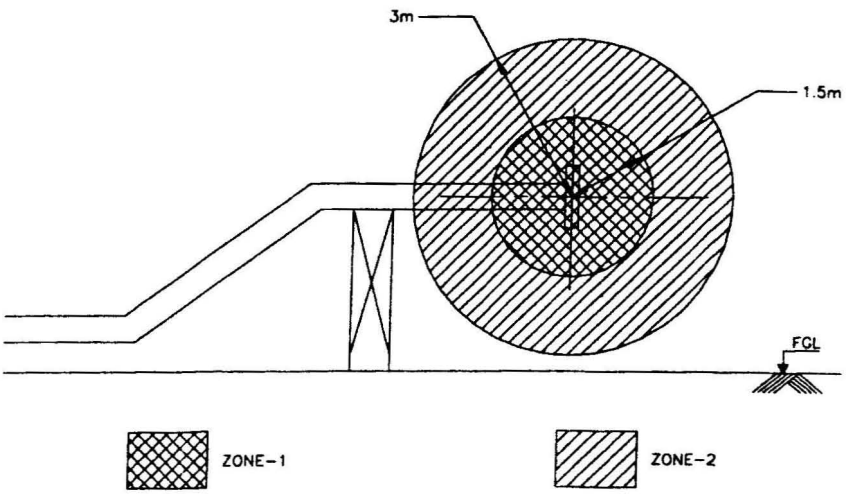

FIG. M7 BALL OR PIG LAUNCHING OR RECEIVING INSTALLATION IN A NON-ENCLOSED, ADEQUATELY VENTILATED AREA

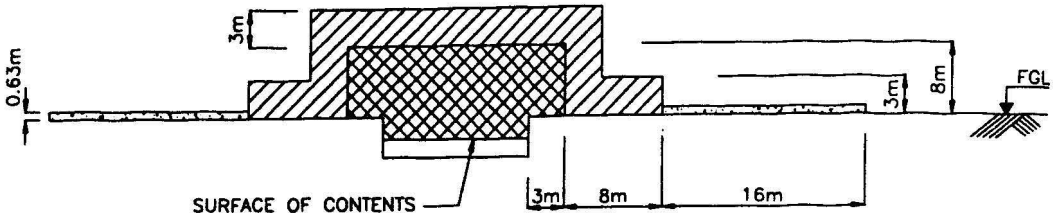

M8A Unit Spearators, Pre-Separators and Separators
(Applicable for Open Tanks or Basins)

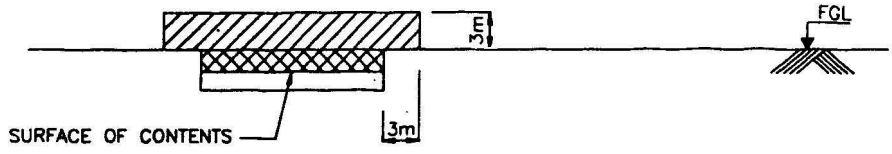

M8B Dissolved Air Floatation (DAF) Units
(Applicable for Open Tanks or Basins)

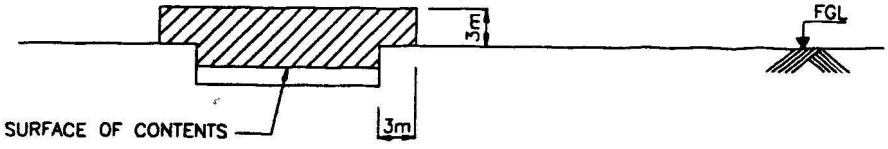

M8C Biological Oxidation (BIOX) Units

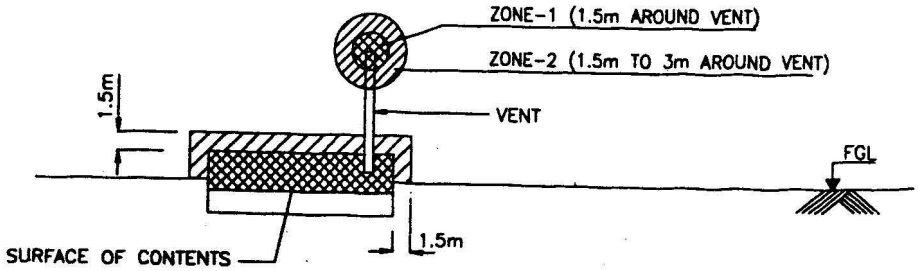

M8D Underground Covered Sump or Oily Water Separator

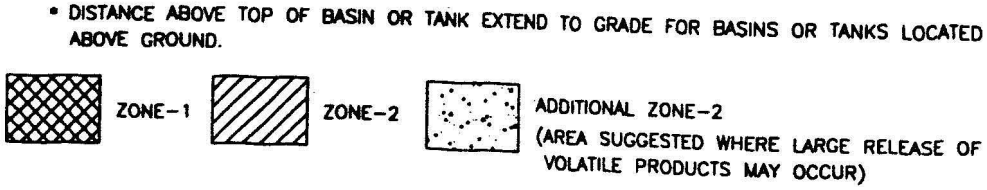

FIG. M8 SEPARATORS, DAF UNITS AND BIOX UNITS

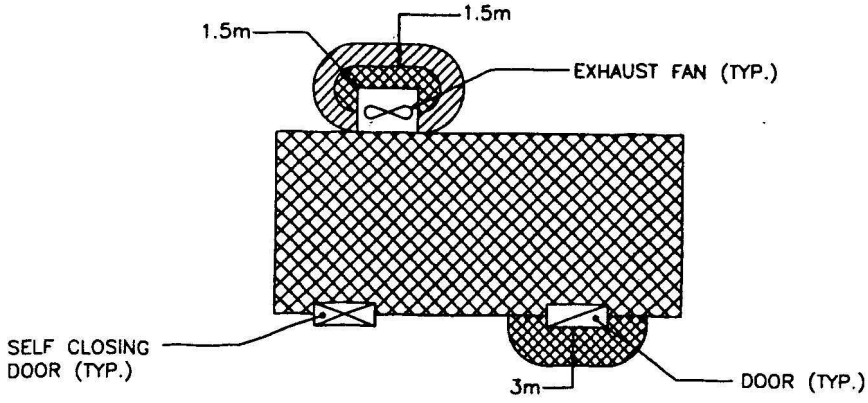

M9A Flammable Substance Released During Normal Operations with Inadequate Ventilation

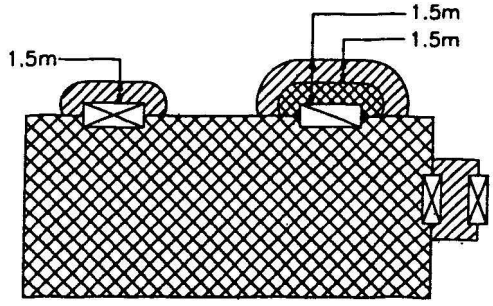

M9B Flammable Substance Released During Abnormal Situation or Infrequent Operations with Inadequate Ventilation

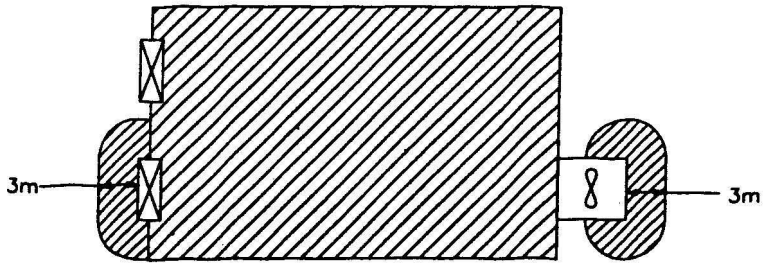

M9C Flammable Substance Released During Abnormal Situation or Infrequent Operations with Adequate Ventilation



FIG. M9 ENCLOSED PREMISES WITH INTERNAL SOURCE OF RELEASE

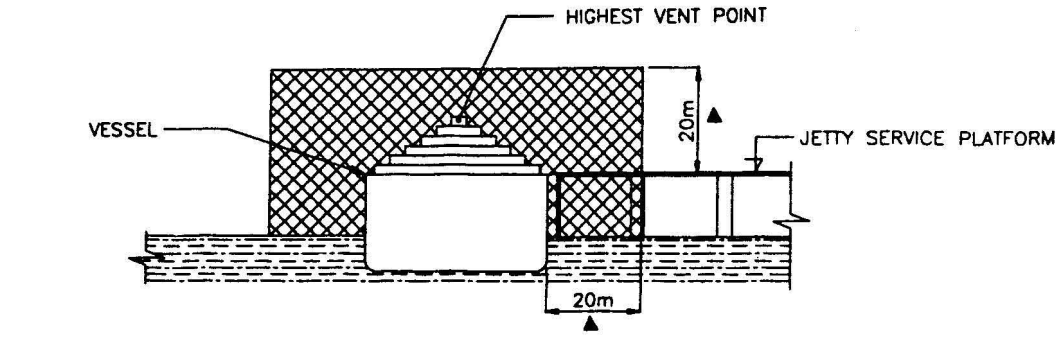

SECTION 1–1

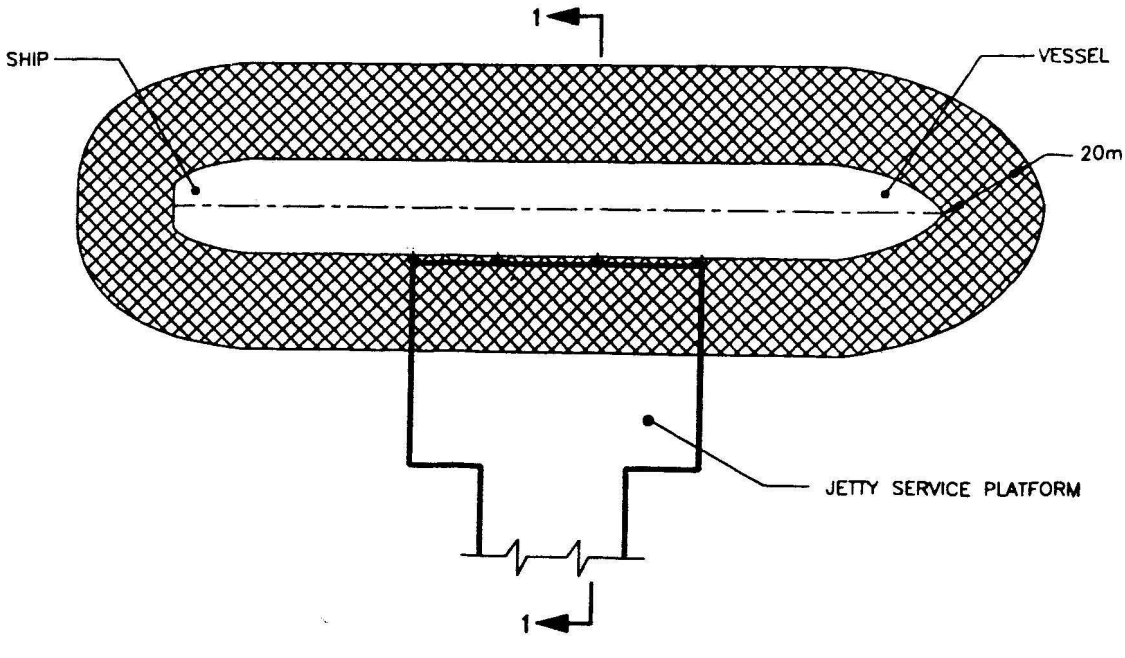

PLAN

ZONE–1

▲ SHALL BE REDUCED TO 15M IN CASE OF VESSELS WITH LOADING OR DISCHARGES RATES $\leq 10M^3/MIN.$

FIG. M10 JETTIES OR MARINE FACILITIES

ANNEX A

[*Clause* 5.3 (e)]

GAS TURBINE INSTALLATIONS

A-1 INTRODUCTION

A-1.1 This Annex applies to gas fired turbine installations.

A-1.2 If the turbine is equipped with an acoustic hood or other enclosure containing parts of the fuel gas system, this enclosure should be defined as the turbine hood.

A-1.3 If the turbine, with or without a turbine hood, is located in an enclosed area, this area should be defined as the turbine room.

A-2 AREA CLASSIFICATION OF THE TURBINE ROOM

A-2.1 In order to classify the turbine room as non-hazardous, the following requirements should both be fulfilled:

a) The turbine room should be adequately ventilated that is at least 12 air changes per hour with proper ventilation patterns. The ventilation system should be arranged so that an over-pressure of at least 50 Pa (0.5 mbar) is maintained in the turbine room with respect to the inside of the turbine hood and any surrounding classified areas with openings to the turbine room. A pressure switch should be installed in order to give an alarm if the differential pressure drops below 50 Pa (0.5 mbar); and

b) The fuel gas pipe to each turbine hood should have no more than one pair of flanges inside the turbine room. All other equipment as valves, connections, filters, drip pot, etc, have to be located either,

   1) outside the turbine room;
   2) inside an enclosure separately ventilated;
   3) inside the turbine hood provided a special ventilation of turbine hood; and
   4) inside turbine hood, provided a special fuel gas supply arrangement as described in **A-4**.

A-2.2 The turbine room may be classified as Zone 1 or Zone 2, if the arrangement is not in compliance with the requirements stated in **A-2.1** or due to other sources of hazard outside the turbine hood. The turbine or any associated equipment including exhaust piping, should not have a surface temperature above 200°C or above 80 percent of the ignition temperature for the actual gas/air mixture in the classified area without special precautions.

A-3 VENTILATION OF THE TURBINE ROOM

A-3.1 The turbine hood for a gas fired turbine should be adequately ventilated with respect to the removal of heat from the machinery and dilution of flammable gas as shown in Fig. A-1. The air should be taken from non-hazardous area.

A-3.2 If the area outside the turbine hood is classified as non-hazardous, the ventilation system should be arranged so that an under-pressure of at least 50 Pa (0.5 mbar) is maintained inside the turbine hood with respect to the outside. This differential pressure may be the combined effect of the under-pressure inside the turbine hood and the over-pressure in the turbine room.

A-3.3 If the area outside the turbine hood is Zone 2 and the turbine hood contains any source of ignition such as a surface with temperature above 200°C, or above 80 percent of the ignition temperature for the actual gas/air mixture the ventilation system of the turbine hood should be arranged so that an over-pressure of at least 50 Pa (0.5 mbar) is maintained inside the hood with respect to the outside.

A-3.4 In both situations described above a pressure switch should be installed in order to give an alarm and shutdown after time delay if the differential pressure drops below 50 Pa (0.5 mbar).

A-3.5 The number of leakage sources under the turbine hood should be kept to a minimum. However, a manufacturer may require some leak-prone equipment to be located inside the turbine hood. The number of air changes required depends upon the probable sources of leakage, the surface temperature of the machine, etc. Examples are given in **A-4**.

A-3.6 As an alternative to ventilation of the turbine-hood during shutdown of the turbine, fire extinguishing gas may be injected.

A-3.7 Provided electrical equipment inside the hood which does not meet zone requirement; the turbine hood should be pre-purged with at least 5 air changes before starting the turbine or energizing any electrical equipment not suitable for Zone 1 area.

A-3.8 The fan used for pre-purging should meet

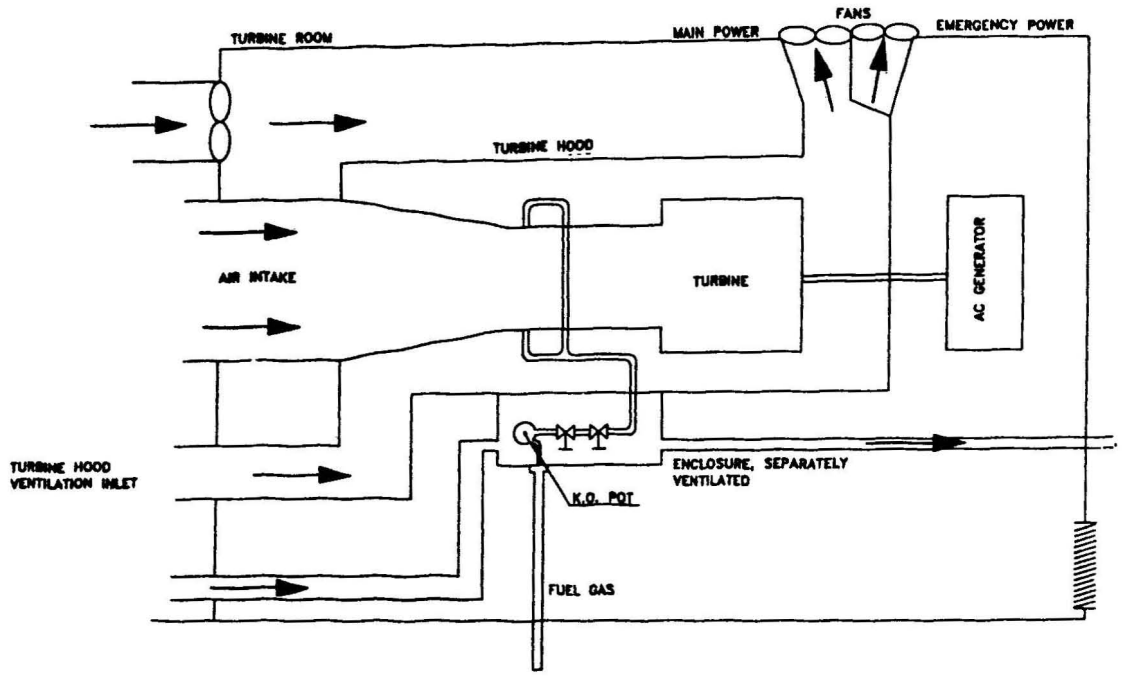

FIG. A1 GAS TURBINE ARRANGEMENT

Zone 1 and should be equipped with a starter suitable for Zone 1 or a starter located in an area remaining non-hazardous during shutdown.

A-4 AREA CLASSIFICATION OF THE TURBINE HOOD

A-4.1 The combination of ventilation, fuel gas system arrangement, temperature on exposed surfaces, electrical equipment inside the turbine hood, etc, should be considered to evaluate the safety of the turbine hood. The safety principles will be elucidated by some of the most common turbine/turbine hood designs.

A-4.2 No Exposed Surface of the Turbine Inside the Hood will have a Temperature Above 200°C During Operation

Provided the ventilation system provides at least 12 air changes per hour, the hood should be considered as adequately ventilated. The area inside the hood will be regarded as Zone 2 area and accordingly all equipment inside the hood have to meet Zone 2 requirement. The equipment which has to be alive after a shut down or stop of ventilation of the hood, should meet Zone 1 requirement. This for instance applies to trace heater, post lubrication pumps, etc. The post lubrication pumps should be supplied from emergency power sources to operate after a shutdown in order to prevent overheating of the bearings. Overheating may ignite flammable vapour or gas inside the hood.

A-4.3 The Turbine has Exposed Surfaces with Temperatures Above 200°C

If the actual flammable gas ignition temperature can be tested and a statement can be made that the surface temperature of the turbine will not exceed 80 percent of the ignition temperature, the same situation as described in **A-4.2** exists.

A-4.4 The Turbine has Exposed Surfaces with Temperature Above 80 Percent of the Ignition Temperature of the Actual Flammable Gas or the Electrical Equipment Inside the Hood which will be Alive as the Turbine is Running does not Meet Zone 2 Requirement

The hood then should be ventilated with sufficient number of air changes per hour to make a highly efficient dilution of any hazardous gas leakage inside the hood. The required ventilation rate depends on the leakage sources inside the hood and should be sufficient to keep the internal atmosphere below an average of 20 percent of the lower explosion limit. Ninety air changes per hour is regarded as a minimum. In addition to the normal ventilation system a 100 percent spare stand-by fan supplied from a continuous power source should be provided. If the ordinary ventilation fails the spare fan should be automatically activated and an alarm be given in the control room. As an alternative to ventilation of the turbine-hood during shutdown of the turbine, fire extinguishing gas may be injected.

A-4.5 During a shut-down, the turbine hood may be classified as non-hazardous due to special arrangement of the fuel gas supply system. A system called 'Block and Bleed' is described in Fig. A-2. A shut down signal will close valve No. 1 and open valve No. 2. The three way valve will open from the gas distribution manifold to the flare. The fuel gas lines within the turbine room and the turbine hood will then be de-pressurized. The probability of gas escape inside the hood may then be regarded as minor. In case of a leak only small quantities of gas will escape. This arrangement does not reduce the requirements to ventilation while the turbine is running.

A-5 DETECTION OF ESCAPED GAS

A-5.1 Gas detectors should be installed inside the turbine hood. Normally, the turbine should shut down if gas is detected inside the hood.

A-5.2 The location of the detectors should be chosen with special care being aware of possible gas pockets, air flow patterns, etc.

A-5.3 Concerning ventilation arrangement, several alternatives exist in case of a shut down due to gas detection inside the hood.

a) The ventilation of the turbine hood continues until hot surfaces have been cooled to a temperature below 80 percent of the ignition temperature of the gas-air mixture which is present. The ventilation system that will be in operation after a shut down should be supplied from an emergency power source with sufficient capacity.

b) The ventilation stops and fire extinguishing gas is released upon detection of gas inside the hood.

c) Other alternatives may be considered depending on the actual installation.

A-6 ADDITIONAL RECOMMENDATIONS

A-6.1 The shut down of ventilation system should correspond to the fire and gas detection system and the fire extinction system installed in the turbine hood and turbine room. Accordingly, other arrangements than those described in this standard may give an equivalent level of safety.

A-6.2 Ventilation and combustion air should be taken from non-hazardous areas.

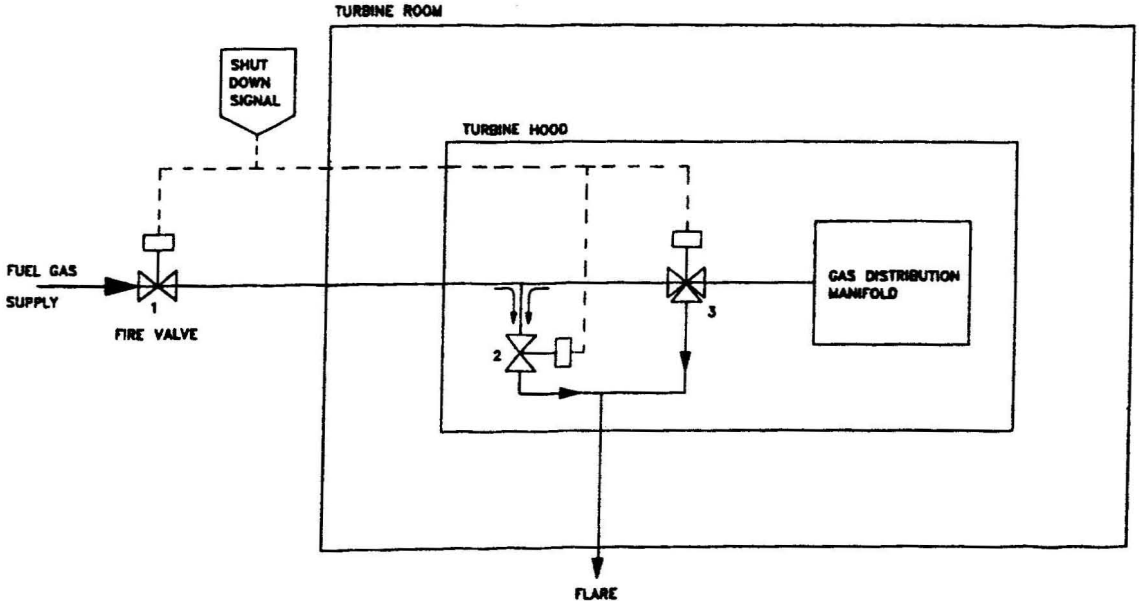

FIG. A2 BLOCK AND BLEED SYSTEM

ANNEX B

(*Clause* 5.4)

CHARACTERISTICS OF FLAMMABLE LIQUIDS, VAPOURS AND GASES

B-0 GENERAL

Available data applicable only to the use of electrical apparatus in hazardous areas are given in IS/IEC 60079-20 for those flammable gases and vapours that have been allocated to apparatus groups. The physical properties of these materials that have to be considered when the degree of risk appropriate to a particular application or installation is being assessed are defined and discussed in this Annex.

B-1 Properties of the materials given are generally for materials in the pure form and may be different if there are impurities or where there are mixtures of materials. In such cases expert advice should be sought. For descriptions of the concepts of temperature classification and apparatus grouping refer IS/IEC 60079-0.

B-2 RELATIVE VAPOUR DENSITY

The relative vapour density of a material is the mass of a given volume of the material in its gaseous or vapour form compared with the mass of an equal volume of dry air at the same temperature and pressure. It is often calculated as the ratio of the relative molecular mass of the material to the average relative molecular mass of air (the value of the latter being approximately 29).

B-3 FLASH POINT

B-3.1 General

The flash point of a material is the minimum temperature at which it gives off sufficient vapour to form a flammable mixture with air near the surface of the material or within the apparatus used for flash point determination. Flash point data are normally associated with materials in the liquid phase. There are a few materials, however, that give off sufficient vapour in the solid phase to form flammable mixtures with air. For those materials and those that sublimate (that is, pass from solid to vapour without the normal intermediate liquid phase), flash point data will be associated with the materials in their solid form.

B-3.2 Materials Having High Flash Points

Some materials have such high flash points that they do not form flammable mixtures with air at normal ambient temperatures, even when exposed to the sun in tropical locations. These should not be discounted as ignition hazards, however, since exposure to a suitably hot surface or use of the material at a temperature above its flash point may create a flammable mixture locally, which may be ignited by the same hot surface or an alternative ignition source. It is therefore necessary to consider the limitation of surface temperatures even when materials of high flash point are being processed.

It should be noted also that materials having high flash points may be used in processes involving high temperatures and possibly high pressures. The normal or accidental release to the atmosphere of compounds under such conditions may present local explosion risks that would not normally be associated with high flash point materials. Materials having high flash points can form flammable mixtures with air at sub-atmospheric pressure.

B-4 LIMITS OF FLAMMABILITY

B-4.1 All combustible gases and vapours are characterized by flammable limits between which the gas or vapour mixed with air is capable of sustaining the propagation of flame.

B-4.2 The limits are called the lower flammable limit (LFL) and the upper flammable limit (UFL) and are usually expressed as percentages of the material mixed with air by volume. They are also sometimes expressed as milligrams of material per litre of air. Where appropriate, both sets of data are included in IS/IEC 60079-20.

B-5 FLAMMABILITY RANGE

The range of gas or vapour mixtures with air between the flammable limits over which the gas/air mixture is continuously flammable is called the flammability range. Gas/air mixtures outside this range are, therefore, non-flammable under normal atmospheric conditions. Concentrations above the UFL in free atmospheric conditions cannot be controlled and further dilution with air will produce mixtures within the flammability range.

B-6 EFFECT OF ENVIRONMENTS WITH OTHER THAN NORMAL ATMOSPHERIC CONDITIONS

B-6.1 It should be noted that the data given in IEC 60079-20 apply only to mixtures of flammable gases and vapours with air under normal conditions of atmospheric temperature and pressure or at suitably elevated temperatures if the flash point of the vapour

is above the normal ambient temperature. Caution should be exercised therefore in assessing the explosivity of gas or vapour with air under environmental conditions that are other than normal. It is possible here to give only general guidance on the influence of changes in temperature, pressure and oxygen content of the mixture.

B-6.2 Generally, the effect of increased temperature or pressure is to lower the LFL and to raise the UFL. Reduction in temperature or pressure has the opposite effect.

B-6.3 An increase in oxygen content of a gas mixture, compared with a mixture of the flammable gas or vapour with air only, has little or no effect on the LFL but generally results in an increase in UFL. The increase in the upper limit depends on the degree of oxygen enrichment and may be substantial. Thus, the effect generally of an increase in oxygen content is to broaden the flammability range.

B-7 IGNITION TEMPERATURE

B-7.1 The ignition temperature of a material is the minimum temperature under prescribed test conditions at which the material will ignite and sustain combustion when mixed with air at normal pressure, without initiation of ignition by spark or flame.

B-7.2 The ignition temperature, formerly known as the auto-ignition or spontaneous ignition temperature, should be clearly distinguished from the flash point. In the latter case, ignition is initiated by a small flame simply to determine that a flammable mixture exists. In the former, ignition is a consequence of chemical reactions initiated on account of the temperature of the local environment and may therefore in practice be a result of the temperature of hot surfaces adjacent to the flammable atmosphere.

B-7.3 The direct result of established ignition temperatures is to limit the surface temperatures of electrical apparatus in hazardous areas so that these do not present an ignition risk. Formerly permitted surface temperatures were limited to a certain proportion of the measured ignition temperature (commonly 80 percent) to provide a factor of safety. It is now generally accepted, however, that the sensitivity of the recognised test methods is such that the temperatures of unprotected surfaces of electrical apparatus may safely be allowed to rise to the ignition temperature of the gas or vapour that presents the explosion risk. Where more than one flammable material may be present in a particular application, the surface temperature should be limited to the, lowest value of the ignition temperatures of the combustibles concerned or the ignition temperature of the particular mixture as determined by test. However where there is a possibility of catalytic interaction between the components or where mixtures of hydrogen, moisture or hydrocarbons with carbon monoxide occur, the surface temperature may need to be less than the lowest ignition temperature of the individual components.

B-8 GENERAL CONSIDERATIONS

B-8.1 Relation Between Ignition Temperature and Maximum Surface Temperature

The vapour given off from a flammable liquid will form a flammable mixture with air, provided the temperature of the liquid is at or above its flash point. The flammable mixture may then be ignited by one of several means: a flame, a suitable frictional spark, an electrical spark of sufficient energy or a hot surface. If, on the other hand, the local ambient temperature and that of the electrical apparatus, etc, are below the flashpoint, the vapour will eventually condense to a mist of liquid droplets and spread as such both through the atmosphere and over the surfaces of the apparatus. It is in the latter respect that adequate resistance to chemical attack may be particularly important.

For ignition by a hot surface, the surface temperature has generally to be greater than the ignition temperature of the flammable material. Therefore, to ensure that ignition by hot surfaces does not occur, it is necessary that the temperature of all unprotected surfaces exposed to the gas or the vapour/air mixture should not be greater than the ignition temperature. This has led to the concept of temperature classification described in IS/IEC 60079-0.

NOTE — Surfaces that are catalytically active can ignite vapours at temperatures lower than the normal ignition temperature.

B-8.2 Mixtures of Materials

Single-component flammable materials are not often encountered in practice. Most frequently, mixtures of two or more materials are present, in ratios that may vary between prescribed limits. Consideration has then to be given to the characteristics required for electrical apparatus in the light of the properties of each individual component present. Often this will impose no difficulty since, by the nature of the process, the various materials will possess similar chemical properties and, often, similar combustion properties.

There are occasions, however, when this is not the case. The materials may be of different gas classifications or have widely different ignition temperatures. In these cases, it is possible to give only the most general of rules for guidance. In general it should be assumed that, at some time during the process or the life of tie plant, the component in the mixture having the most demanding of the characteristics being considered (for

example, the gas classification, the flammable limits, the flash point or ignition temperature) will be present as the largest proportion of the mixture, and the electrical installation should be designed accordingly.

However, this can impose limitations that may be severe, and further consideration of the relative rates and quantities of the materials used in the process and the degree of control thereof may be required. Some relaxation may then be possible, but expert advice should always be sought in these circumstances.

Particular consideration should be given to those materials whose behaviour maybe anomalous. It is known, for example, that carbon monoxide, with which Group IIA apparatus may be safely used, may be added in considerable quantity to hydrogen without altering the group of apparatus, namely Group IIC that has to be used with this latter compound. Carbon monoxide also exhibits unusual behaviour under other test conditions. For example, it has been shown that the addition of moisture to mixtures of carbon monoxide with air to the point of saturation serves to change the gas classification for this material from Group IIA to Group IIB. This change in gas classification is also observed if methane is added to carbon monoxide in the proportion 15: 85 methane to carbon monoxide.

When the individual components of mixtures and their proportions of the total mixture are precisely known or can be sustained, it is often possible to calculate the resultant flammable limits for the mixture with air. Examples of this are described in Annex C. However, if the mixture is predominantly carbon monoxide, expert advice should be sought.

B-8.3 Mists

The characteristics described in this standard apply to mixtures of gases and vapours only with air. The distinction to be drawn between a gas and a vapour in this context is simply that the latter may be in contact with its liquid phase at normal temperature and pressure, whereas a gas cannot be liquefied under normal atmospheric conditions. In practice, mists consisting of clouds of condensed vapour can also occur. In general, the characteristics described in this standard should be considered applicable to mists, since local ignition sources or hot surfaces generally may serve to restore the condensed material to its vapour phase.

ANNEX C

(Clauses 5.4 *and* B-8.2)

CALCULATION OF FLAMMABLE LIMITS FOR A MIXTURE OF GASES

C-1 LIMITS FOR SAMPLE MIXTURES

C-1.1 General

Frequently, explosion risks arise from mixtures of flammable materials with air. Though only the most general of rules can be indicated for ensuring the safe use of electrical apparatus with mixtures of gases, it is often desirable to be able to establish with some degree of confidence the flammable limits for such mixtures in order that local explosion risk can be avoided. A method that may be used to calculate the flammable limits of most mixtures of flammable gases is described in **C-1.2**. Though this method achieves a satisfactory degree of accuracy for most applications, it is always advisable to apply caution where the expected total concentration of combustible is near to the calculated value for the appropriate flammable limit. Particular care should also be taken in circumstances where catalytic effects between individual components of a mixture are suspected. General purpose calculations cannot take such effects into account.

C-1.2 Method of Calculation

The method of calculation is based on a simple relationship due to Le Chatelier connecting the lower flammable limits for any two gases in air with the lower limit for any mixture of them. The relationship is expressed by the following equation:

$$(n_1/N_1) + (n_2/N_2) = 1 \qquad \ldots(1)$$

where

N_1 and N_2 = lower flammable limits in air for each combustible gas separately (in percent); and

n_1 and n_2 = percentages of each gas present in any mixture of them that is itself a lower limit mixture.

The formula indicates, for example, that a mixture of air, carbon monoxide and hydrogen that contains one-quarter of the amount of carbon monoxide and three-quarters of the amount of hydrogen necessary to form lower limit mixtures with air independently (that is, one-quarter of 14 percent approximately and three-quarters of 4 percent respectively) will itself be a lower limit mixture.

The formula may be generalized to apply to any number of gases. Thus,

$$(n_1/N_1) + (n_2/N_2) + (n_3/N_3) + \ldots = 1 \quad \ldots(2)$$

The formula may be applied also to upper limit mixtures with suitable redefinition of the terms n_1, etc, and N_1, etc.

The equation may be rendered more useful as follows. (It is assumed that the tennis used are consistent, that is, they are all lower limit mixtures or they are all upper limit mixtures.)

Let P_1, P_2, P_3, etc, represent the proportions of each combustible gas present, ignoring air and inert gases, so that:

$$P_1 + P_2 + P_3 + \ldots = 100 \quad \ldots (3)$$

and let L represent the flammable limit (upper or lower, as appropriate) so that:

$$L = n_1 + n_2 + n_3 + \ldots \quad \ldots (4)$$

since $n_1/L = P_1/100$, then substituting in equation (2), we get

$$L/100\ (P_1/N_1 + P_2/N_2 + P_3/N_3 \ldots) = 1 \quad \ldots (5)$$

and therefore $L = 100/(P_1/N_1 + P_2/N_2 + P_3/N_3 \ldots) \ldots (6)$

C-1.3 Example

As an example of the use of this equation, consider the determination of the lower limit for a gas mixture representative of natural gas.

The natural gas might comprise the following:

methane in the proportion of 80 percent (P_1) (lower limit: 5.32 percent)

ethane in the proportion of 15 percent (P_2) (lower limit: 3.22 percent)

propane in the proportion of 4 percent (P_3) (lower limit: 2.37 percent)

butane in the proportion of 1 percent (P_4) (lower limit: 1.85 percent)

The lower flammable limit of this mixture with air would be:

$$L = 100/(80/5.32 + 15/3.22 + 4/2.37 + 1/1.85)$$

$$= 4.55 \text{ percent}$$

C-2 LIMITS FOR COMPLEX INDUSTRIAL GAS MIXTURES

C-2.1 Method of Calculation

A flammable gas mixture encountered in many industrial processes comprises hydrogen, carbon monoxide, methane, nitrogen, carbon dioxide and oxygen. The procedure to be used for calculating the flammable limits for mixture of these gases is as follows:

a) The composition of the mixture is first recalculated on an air-free basis. The amount of each gas is expressed therefore as a percentage of the total air-free mixture.

b) A somewhat arbitrary dissection of the air free mixture developed from step (a) is made into simpler mixtures, each of which contains only one flammable gas and part or all of the nitrogen and carbon dioxide.

c) The appropriate limits for each of the mixtures obtained from step (b) are obtained from available data (*see* Tables C-1 and C-2, which give available data for the flammable limits of hydrogen, carbon monoxide, methane, ethane and benzene with various amounts of carbon dioxide and nitrogen as inert diluent components).

d) The limits of the air-free mixture are then calculated from the data for the dissected mixtures obtained in step (c) using equation (6), were P_1, P_2, P_3, etc, are the proportions of the dissected mixtures, in percentages, and N_1, N_2, N_3 etc, are their respective limits.

e) From the limits of the air-free complex mixture thus obtained, the limits of the original complex mixture which included air can be deduced.

C-2.2 Example

The following is an example of the step-by-step calculation outlined in **C-2.1**.

a) The constituent components of the gas mixture are indicated in Table C-1. The composition of the air-free mixture, indicated in the third col of the table, may be calculated as follows:

The amount of air in the mixture is (2.8 × 100)/ 20.9 or 13.4 percent. The air-free mixture is therefore 86.6 percent of the whole. When the original proportions of carbon dioxide, carbon monoxide, methane and hydrogen are divided by 86.6 and multiplied by 100, the air-free percentages are obtained. The nitrogen percentage is the difference between 100 and the sum of these percentages.

Table C-1 Components of the Industrial Gas Mixture

Sl No.	An Area Constituent Components of Industrial Gas Mixture	Composition	Composition Calculated on Air-Free Basis
		Percent	Percent
(1)	(2)	(3)	(4)
i)	Carbon dioxide	13.8	15.9
ii)	Oxygen	2.8	0.0
iii)	Carbon monoxide	4.3	5.0
iv)	Methane	3.3	3.8
v)	Hydrogen	4.9	5.7
vi)	Nitrogen	70.9	69.6

b) The flammable gases are paired with the inert gases to form separate mixtures, as shown in Table C-2.

c) The flammable limits for the separate or dissected mixtures, taken from Fig. C-1, are indicated in col 8 and 9 of Table C-2.

d) The values for the flammable limits of these simpler mixtures and for the percentages of the air-free mixture that each of these simpler mixtures represents (*see* col 5 of Table C-2) permit calculation of the flammable limits for the complex air-free mixture. Thus, the lower flammable limit (LF) (in percent) is given by the following equation:

LFL = 100/(22.5/61 + 24.7/36 + 34.2/50 +18.6/32) = 43 percent

The upper flammable limit (UFL) (in percent) is given by the following equation:

UFL = 100/(22.5/73 + 24.7/41.5 + 34.2/76 +18.6/64) = 61 percent

e) As the air-free mixture is 86.6 percent of the complete sample mixture, the flammable limits in air for the sample mixture are (43 × 100)/86.6 and (61 × 100)/ 86.6, or 50 percent and 70 respectively. Thus the original sample will be flammable within the limits of 50 percent and 70 percent in air.

C-2.3 Further Information

Further notes of the limitations of these calculations and the precautions that should be taken with such calculations are available (*see* Coward, H.F. and Jones, G.W. Limits of flammability of gases and vapors. US Bureau of Mines Bulletin 503, 1952).

Table C-2 Flammability Limits of Simpler Mixtures

[*Clause* C-2.2(b)]

Sl No.	Flammable Material	Amount of Flammable Material	Carbon Dioxide	Nitrogen	Total	Ratio of Inert to Combustible Gas	Flammable Limits from Fig. C-1	
							Lower	Higher
	Percent	Percent	Percent	Percent	Percent	Percent	Percent	Percent
(1)	(2)	(3)	(4)	(5)	(6)	(7)	(8)	(9)
i)	Carbon monoxide	5.0	—	17.5	2.5	3.5	61.0	73.0
ii)	Methane	3.8	—	20.9	24.7	5.5	36.0	41.5
iii)	Hydrogen	3.0	—	31.2	34.2	10.4	50.0	76.0
		2.7	15.9	—	18.6	5.9	32.0	64.0
iv)	Total	14.5	15.9	69.6	100.0	—	—	—

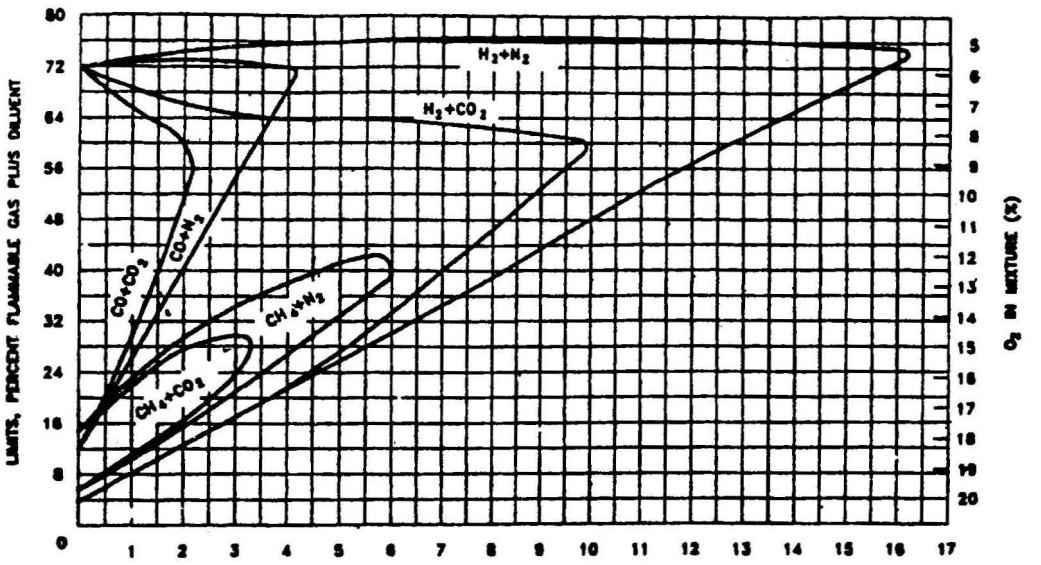

FIG. C-1 LIMITS OF FLAMMABILITY OF HYDROGEN, CARBON MONOXIDE AND METHANE CONTAINING VARIOUS AMOUNTS OF CARBON DIOXIDE AND NITROGEN

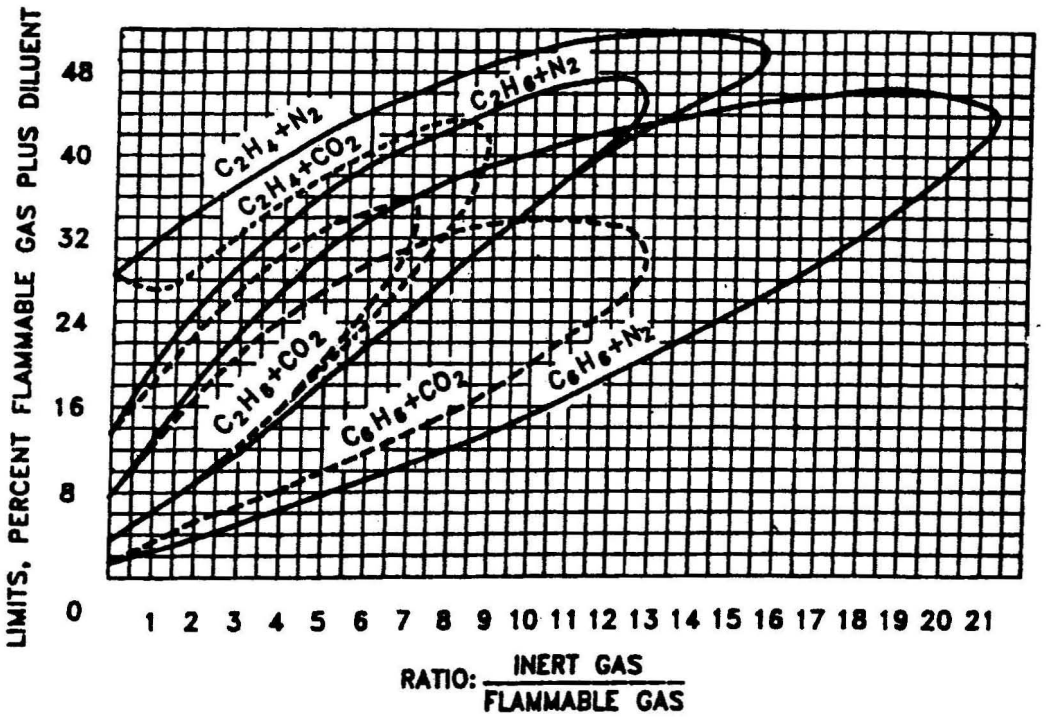

FIG. C-2 LIMITS OF FLAMMABILITY OF ETHANE, ETHYLENE AND BENZENE CONTAINING VARIOUS AMOUNTS OF CARBON DIOXIDE AND NITROGEN

ANNEX D

(*Clause* 6.1.6)

EFFECT OF VENTILATION ON HAZARDOUS AREA CLASSIFICATION

(*Informative*)

D-1 INTRODUCTION

Ventilation comprises the movement of air within and through a volume to achieve the introduction of fresh air into, and removal of contaminated air from the volume, and the mixing of air and contaminants within the volume.

Gas or vapour released to the atmosphere will eventually be diluted by dispersion in free air until it's concentration is at a safe limit (below LFL). The time taken for this to occur and the size and spatial location of the gas cloud depends upon the nature of the release, the vapour properties such as density relative to air, the movement of the air and the presence of turbulence to promote mixing. Where the release is not into completely free air (that is not into an open area) then the air flow, or ventilation, is also a factor in determining the rate of gas or vapour dispersion. However, it is important to also consider, in a sheltered or obstructed open area or enclosed area, whether any recirculating motions may lead to a gradual accumulation of gas or vapour over time.

The processes of movement of air and removal of contaminated air occur, to differing degrees, in any ventilation process. The limiting cases are:

a) *Efficient displacement without mixing* — Here a contaminant is swept out of a volume without much mixing. This is sometimes referred to as 'displacement ventilation'. By inference, high concentrations of contaminant may exist within the volume and be emitted from it.

b) *Gradual displacement with good mixing* — Here any contaminant is well-mixed through the volume. A large part or all of the volume can become contaminated, while displacement removes the mixture of air and contaminant. A special case of this is sometimes referred to as 'dilution ventilation'.

Whatever the situation, the ventilation of a confined space is typically quantified by a single parameter that is the number of air volume changes per hour. Ventilation is a complex subject and in carrying out an assessment it is necessary to consider both the type of ventilation and, within the type, the level of ventilation to be provided, it's degree of reliability and the consequences of it's failure. These considerations need to take account of the potential size of release and the affected volume which may be a subdivision of a larger volume, for example a bay in a large warehouse.

D-1.1 Source and Grade of Release

For the purpose of area classification a source of release is defined as a point from which a flammable gas, vapour or liquid may be released into the atmosphere.

Three grades of release are defined in terms of their likely frequency and duration:

a) *Continuous grade release* — A release that is continuous or nearly so, or that occurs frequently and for short periods.

b) *Primary grade release* — A release that is likely to occur periodically or occasionally in normal operation, that is, a release which, in operating procedures, is anticipated to occur.

c) *Secondary grade release I* — A release that is unlikely to occur in normal operation and, in any event, will do so only infrequently and for short periods, that is, a release which, in operating procedures, is not anticipated to occur.

The grade of release is dependent solely on the frequency and duration of the release. It is completely independent of the rate and quantity of the release, the degree of ventilation, or the characteristics of the fluid, although these factors determine the extent of vapour travel and in consequence the dimensional limit's of the hazardous zone.

To assist understanding of the boundaries of the definitions of the different grades of release, the following quantities are suggested. A release should be regarded as continuous grade if it is likely to be present for more than 1 000 h per year and primary grade if it is likely to be present for between 10 and 1 000 h per year. A release likely to be present for less than 10 h per year and for short periods only should be regarded as secondary grade. This assessment should take account of any likelihood of leaks remaining undetected. Where releases are likely to be present for less than 10 h per year but are anticipated in normal operation (for example, routine sampling points) they should be regarded as primary grade releases.

The allocation of the grade of release should be

reviewed in the course of the design stages to determine, if practicable and economical design or engineering improvements can be made to reduce the number of continuous and primary grade release.

Assessment of the grade of release is not always obvious and will require experienced engineering and operational judgment. Events which occur regularly but briefly should be classified as primary grade sources giving rise to a Zone 1 area, unless carried out under permit-to-work circumstances.

D-1.2 Relationship Between Grade of Release and Class of Zone

There is, in most cases, under unrestricted 'open air' conditions a direct relationship between the grade of release and the type of zone to which it gives rise; that is,

a) Continuous grade normally leads to Zone 0;
b) Primary grade normally leads to Zone 1; and
c) Secondary grade normally leads to Zone 2.

However, it should be noted that the terms 'Grade of Release' and 'Zone' are not synonymous. Although continuous, primary and secondary grade releases will normally result in Zone 0, 1 and 2 respectively, this may not always be true. For example, poor ventilation may result in a more stringent zone while, with high ventilation provision, the converse will be true. Also some sources may be considered to have a dual grade of release with a small continuous or primary grade and a larger secondary grade. Examples of this are a vent with dual-purpose process requirements or a pump seal.

It should also be noted that, whilst a Zone 1 area will often be surrounded by a larger Zone 2 area, there is no specific requirement for this. Where a Zone 1 area is not part of a larger Zone 2 then the possibility of any larger but infrequent release, which would require a larger Zone 2 area, should be considered.

D-1.3 The different types and levels of ventilation are described below under the sections Open Areas, Enclosed Areas and Sheltered or Obstructed Areas which cover the subdivisions of 'outdoor' and 'indoor' ventilation. Fig. D-1 may be used to determine how to assess the level of ventilation for any given situation.

D-2 OPEN AREAS

An open area is defined as an area that is open-air without stagnant regions, where vapours are rapidly dispersed by wind and natural convection. Typically, air velocities will frequently be above 2 m/second.

The area classification exercise is simplified if all continuous and primary grade sources of release can be located within open areas. However, obstructed or partially obstructed situations cannot always be avoided in the layout of facilities, particularly where there is a space limitation.

D-2.1 Natural Ventilation

Natural ventilation is caused by wind or convection effects. Typical examples are:

a) Open air situations typical of those in the chemical and petroleum industries which comprise open structures, pipe racks, pump bays, etc; and
b) Open buildings which, having regard to the relative density of the gases and/or vapours involved, have openings in the walls and/or roof so dimensioned and located that the ventilation inside the building for the purpose of area classification can be regarded as equivalent to that in an open air situation.

D-2.2 Obstacles to Free Air Movement

Obstacles may impede natural ventilation, and this may enlarge the extent of the zone and possibly increase the severity of the zone number. However, it is also noted that some obstacles such as dykes, walls and ceilings may limit the movement of a gaseous release, reducing the extent of the zone. Example of this is uses of a 'deflection wall' are provided in **D-2.3**.

D-2.3 Effect of a 'Fire or Deflection Wall' on Open Area Hazardous Zone

Where limitation of space will not allow a source of ignition (electrical or otherwise) to be located outside a hazardous area, the alternative may be to separate them with an imperforate fire wall. This would be sized so that the equivalent vapour travel distance around the ends of or above the wall will be at least equal to the straight line distances derived from the standard assessment of the hazard zone dimensions. This widely used rule of thumb is illustrated in Fig. D-2. It has no formal technical basis, and it's adoption reflects an engineering judgment or assessment.

Such a deflection wall should be constructed to an adequate fire resistance standard and be located so as to minimize the flame engulfment of facilities containing a significant quantity of flammable material, and may form part of the site boundary or the wall of a building. The wall should be on one side only of the facilities containing the source(s) of release, allowing free ventilation in all other directions.

D-2.4 Buildings Adjacent to Open Hazardous Areas

A building may contain no internal sources of release, but have openings direct into an adjacent open

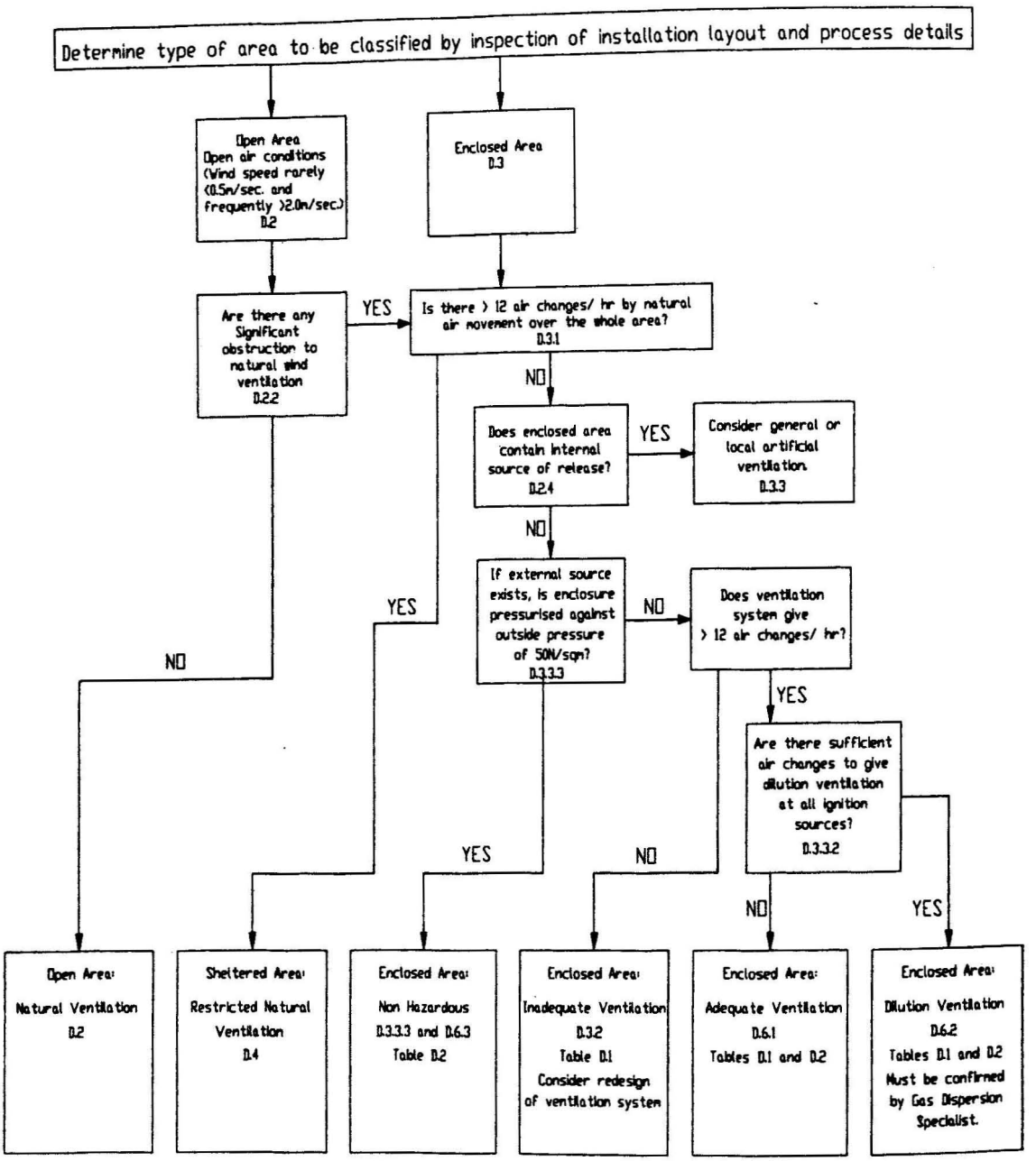

FIG. D-1 DETERMINATION OF VENTILATION

classified area. If the openings are not too large, ventilation with fresh air forced into the building may allow it to remain unclassified. In any case arrangements that will ensure vents, doors etc. can be closed promptly following a release in the open area should be provided. The alternative is to assign the building the same zone number as the adjacent area or higher zone, if it is possible for any leakage to persist in the building (*see* Table D-2).

D-3 ENCLOSED AREAS

An enclosed area is any building, room or enclosed space within which, in the absence of artificial ventilation, the air movement will be limited and any flammable atmosphere will not be dispersed naturally.

This section applies to buildings, rooms or enclosed spaces where there are potential sources of release of flammable vapours or gases, but natural ventilation

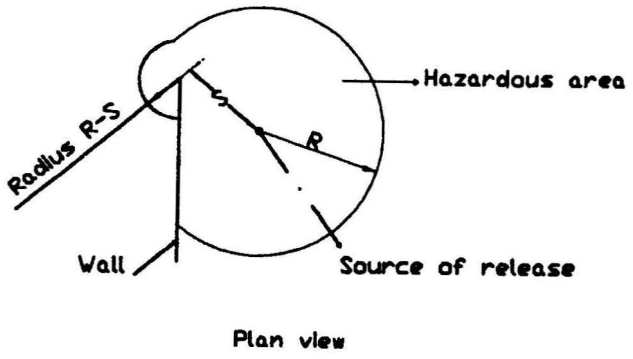

NOTES

1 *R* is the hazard radius for open air situation.

2 The wall should extend to at least the full vertical height of the hazardous area if it is to be used as a deflection wall.

3 *S* is the shortest distance from the source to the edge of the retaining wall.

FIG. D-2 EXTENT OF HAZARDOUS AREA AROUND WALL PRODUCING SHELTERED AREA

does not provide a minimum of 12 air changes/hour throughout the space. Normally, artificial ventilation (that is, mechanical ventilation) would be provided in order to dilute and remove flammable gases or vapours released within the building. In most cases there will also be openings in the walls, through which flammable gases may migrate as a result of draughts, convection currents, or disturbance caused by equipment within the enclosed area.

It is generally easier to ensure that flammable gases removed from an enclosed area are diluted and released safely if the ventilation system is designed to extract air from the building. In this case, it is also possible to monitor the air exhausting from the building, and to take additional precautions if flammable gases are detected.

Enclosed areas are further qualified by various levels of ventilation, that is, adequate, inadequate, dilution and over-pressure.

D-3.1 Adequate Ventilation

Adequate ventilation, natural, artificial or a combination of both, is not full ventilation as typified by an open area, but is a reference condition used extensively and defined in a number of Codes world wide as 'the achievement of a uniform ventilation rate of at least 12 air changes per hour, with no stagnant area'. As such it will usually have air velocities lower than in an open area. A ventilation rate of 12 air changes/hour is likely to be sufficient, if there are no stagnant regions, to ensure that the flammable atmospheres arising from an improbable short-term release of gas or vapour will not persist for longer than about 10 min. The extent of the flammable atmosphere that will exist during the release from a low momentum source can be estimated by specialist calculations.

The objective of adequate ventilation is to ensure that the building can be properly classified as Zone 2 in large buildings it may be possible to classify some parts as non-hazardous, while other parts are Zone 2. Continuous or primary grade releases should not be discharged internally, but should be piped directly to an external safe location through ducting. With suitable ventilation design, any areas of Zone 1 should be of very limited extent.

Although adequate ventilation is defined by the 12 air changes/hour criterion it must be remembered that the hazard zone that will be formed is also dependent on the size of the release and the building volume directly affected by the release. In small buildings, 12 air changes/hr can often be achieved simply by providing sufficient ventilation openings, at high and low levels, and in more than one wall of the building. With larger buildings or structures artificial ventilation is often needed to achieve 12 air changes, and where this is provided, careful design and balancing of air inlet or extraction points is needed to ensure no stagnant areas exist. Measurements made after the ventilation system is installed may be needed to check for stagnant areas, and the tests may need to be carried out both on an empty building, and after large items of plant, or stocks of products have been introduced. With very large buildings it may become impracticable to provide artificial ventilation to achieve 12 air changes/hour; it is certainly inefficient to blow very large amounts of

air around constantly, simply to deal with a small secondary grade source of release that may occur quite infrequently. An alternative approach is needed, and the best solution will depend on the number, location and probability of the secondary grade sources of release occurring. Localized exhaust ventilation (*see* **D-3.3.1**), gas detection or other means of prompt identification of releases of flammable materials should be considered. No general guidance can be given about the size of buildings or structures that suit these three alternatives, as other factors such as the prevailing wind conditions at the site and whether the building is heated also needs to be considered.

If hazardous concentrations are created within a building then there is the potential to produce a hazardous zone outside of the building. An extreme worst case scenario is for the whole building contents to reach a hazardous concentration. There may then be the potential for ignition to occur externally to the building, producing a flame that burns back into the building creating a confined explosion within the building. It is therefore essential that the potential for gas build-up to, say, concentrations above 20 percent of LFL be avoided within the bulk atmosphere in the building.

In a building with a well-mixed atmosphere into which a constant flow of flammable gas is released, a simple calculation allows the steady state concentration of gas to be calculated. If the release is intermittent, or controlled before the steady state concentration is reached, the maximum gas concentration will be less. The minimum ventilation flow rate required to ensure that concentrations of above 20 percent of the LFL are not produced can also be estimated by similar methods from the size of the release and the lower flammable limit of the gas. The recommended design target is to ensure that the average concentration of flammable atmosphere within the building does not exceed 20 percent of the LFL in the event of a prolonged release from a secondary grade source. The zoning external to the building should take account of the location of release points relative to openings. In cases where the release impinges internally within the building, specialist advice should be sought because the outcome may be building, release and material specific. It is possible that, in certain circumstances, there is no need to assign a hazardous area beyond any openings in the building, unless the opening is within the local zone immediately surrounding the release location. However, it is; recommended that specialist advice is sought to confirm this is the case.

D-3.2 Inadequate Ventilation

Where an enclosed area is not provided with artificial ventilation, air movement is likely to vary substantially, and no general assumptions can be made about the mixing of a release. Continuous and primary grade sources of release should be avoided in such an area. Inadequately ventilated areas should be classified as Zone 1 since a secondary grade source may form a localized flammable atmosphere and persist for long periods.

Inadequately ventilated areas should be avoided, particularly where personnel access is required. If ventilation cannot be improved, the use of flammable gas detectors should be considered. When these are installed it should not be possible for any substantial volume of flammable atmosphere to form and persist undetected allowing safety measures to be taken, as an ignition would be very hazardous. If fixed gas detectors are not provided, access should be controlled, and testing of the atmosphere before entry should be required.

D-3.3 Ventilation Options

The assumption of good mixing is likely to be reasonable for releases from pressurised sources, which entrain air into a jet. For releases with low momentum, very careful design of the air extract points may be needed to ensure good mixing is achieved. Measurement of localized air movement within the building after all equipment is installed may be needed.

If extractive ventilation is used, the outlet should normally be at high level, and in particular it is important that it is sited so that recirculation of flammable gases back into any other building or structure is not possible, even under very still air conditions. If ventilation is achieved by blowing fresh air into the building, diluted vapours will escape through all the openings. The flows are likely to be influenced by wind and convective forces. In any case, provided the atmosphere inside the building does not reach the LFL and the local zones around the source of the release do not reach any of the openings; this should not lead to the formation of a hazardous area around the outside as a result of release sources inside.

D-3.3.1 Local exhaust ventilation (LEV) is a recommended means of controlling the release of flammable gases to the general atmosphere, where there are a small number of readily identifiable primary or secondary grade sources. This is a common situation, including for example: a routine drum filling operation; a sampling point that is regularly used; around equipment that needs regular opening for cleaning.

LEV systems can only effectively capture released gases and vapours over quite short distances, determined by the inlet velocity and correct design of the inlet. Factors that need to be considered when the system is designed include: the rate of release, the momentum of the gas flow, any air movement due to

general ventilation nearby, and the position of the operator. Capture velocities in the range 0.5-1.0 m/s are typically used for releases at low velocity into moderately still air. The concept of air change rates does not apply to the design of LEV.

With a suitable design, LEV should prevent any flammable atmosphere forming except in the immediate vicinity of the release source. An enclosed area may then remain unclassified, even though primary grade sources are present. More commonly it will be Zone 2, to allow for various possible secondary grade sources. Where primary grade sources are present, an audible or visual warning should be provided if the LEV system is not functioning correctly.

LEV may also be provided to control secondary grade sources that are generated by operator action, for example, sample points. In this case, the extraction may only need to operate during the sampling operation. Some means to ensure the LEV is always operating when it is needed is required.

D-3.3.2 *Dilution Ventilation*

In some restricted circumstances, a very high flow of air applied to a space, perhaps within some larger enclosed area, may be used to dilute and remove much larger releases than those controlled by LEV. A forced draft fan may be used in conjunction with an extract fan. This arrangement has been used inside the acoustic hoods for gas turbines, where the complex pipe work provides many potential sources of release, but the ignition source created by the hot surface of the turbine cannot be prevented. The objective is to dilute even quite large releases very close to the source, so that ignition cannot occur. The maximum size of release to be controlled needs to be carefully assessed and each installation will be different, so generalized advice on ventilation rates cannot be given.

D-3.3.3 *Over-pressurization*

This term is used to describe a system of ventilation for a room or other enclosed area, and also a protective method for a single item of electrical equipment.

Where it is applied to a room, it may allow a room that contains no sources of release to be classed as non-hazardous although it is connected to another room classified as Zone 1 or Zone 2, or allow a room surrounded by a Zone 1 to be classified as Zone 2, if it contains only secondary grade sources of release. Where it is applied to a single item of equipment, or a group of equipment items inside a single well-sealed cabinet, it is designed to prevent ingress of flammable gas, and hence prevent the formation of a flammable atmosphere inside. This technique may allow electrical equipment, that is, unobtainable in an ignition-protected form to be installed in a hazardous area.

Applied to an enclosed area it is a form of artificial ventilation and should be designed so that a pressure differential of at least 50 N/m^2 (5 mm WG) is maintained between the enclosed area and any hazardous area. Warning, preferably audible and visual should be provided for loss of pressure differential. If direct access is provided between the pressurised area and a Zone 1 area, air lock doors should be installed between the areas and classified as Zone 1 area.

Clause **D-6.3** gives advice on other actions that should follow any failure of the ventilation system. As air locks may allow pressure differentials to be briefly lost, some delay on the activation of any shutdown of electrical equipment may be considered. Such a delay following an audible alarm should not normally exceed 30 s.

D-3.3.4 *Air Intakes and Exhausts*

The location of air intakes (including intakes to heating and ventilating systems; air compressors for instrument, process or breathing air; gas turbines) should be chosen to avoid transfer of a flammable atmosphere to an ignition source. Air intakes should be located as far as is reasonably practicable from the boundary of any hazardous area. The location should be selected after considering the effects of,

a) Air contamination with flammable material; and

b) Any additional safety systems, for example, equipment trips on detection of flammable material in the air intakes.

The exhaust outlets of heating or ventilation systems serving installations classified as hazardous should themselves be classified appropriately.

D-4 SHELTERED OR OBSTRUCTED AREAS

A sheltered or obstructed area is defined as an area within or adjoining an open area (which may include a partially open building or structure) where, owing to obstruction, natural ventilation may be less than in a true open area.

The area classification exercise is simplified if all continuous and primary grade sources of release can be located within open areas. There are, however, a variety of naturally ventilated situations where the assumption of wind speeds for an open area (that is, wind speed rarely less than 0.5 m/s and frequently above 2 m/s) may not apply, but air change rates are adequate and will be much greater than those found inside enclosed areas or even well-ventilated buildings. It should be noted that air movement may be funneled selectively in particular directions due to the layout of

a facility. Typical examples include closely spaced pipe racks within open air plant; within structures having a roof but only partial walls (compressor houses, road tanker loading areas); open air plant where air movement is obstructed by large tanks or walls; tank bunds and below-grade areas such as pits and pipe trenches. Such locations require special consideration for area classification. With partial buildings, wind-flows past the building will create areas of high turbulence and rapid dispersion of releases, particularly around the edges of the building and above roof level. The extent of any classified area beyond the boundaries of the building need to consider this aspect.

The hazardous extent around sources of gas at high pressure in the open air is not so affected by wind speed because releases at high pressure induce their own mixing. The hazardous extent of a release in a sheltered area will be of a similar size to that in the free atmosphere provided that there is a sufficient supply of air to remove the diluted mixture from the neighborhood of the release and there are no directly enclosing surfaces to encourage recirculating motions or retain the diluted mixture. Provided the surrounding atmosphere does not contain concentrations above 20 percent of the lower flammable limit, the zone around high pressure gaseous releases will not be greater than twice the zone size in free air. If any mixture accumulation does occur, however, then the zone size may be increased through the re-entrainment of gas mixture along with the air. Releases from low pressure or evaporation sources are dependent upon the ventilation flow to induce mixing as well as transport. Under these conditions, precautions need to be taken if the vapours or gases are denser than air or lighter than air to ensure that there is no scope for vapour trapping at floor/roof level respectively because the density stratification can seriously impede local mixing rates.

The use of a wall to restrict the extent of a hazardous area in a particular direction and so increase the effective distance between a source of release and a source of ignition is covered in **D-2.3**.

Where a sheltered area that has no source of release adjoins horizontally a classified open area, it should normally be given the same zone number as the adjacent area. This would particularly be the case if the sheltered area is surrounded by a classified open area.

D-5 EFFECT OF VENTILATION ON THE HAZARDOUS AREA CLASSIFICATION OF ENCLOSED AREAS

D-5.1 Considered the objective of providing artificial ventilation to enclosed areas, that is, those confined volumes in which natural ventilation provides less than 12 air changes per hour throughout the whole volume. The consequences of releases in these enclosures were briefly discussed. The purpose of this section is to define the zone ratings that should be applied in such enclosed areas. The rating depends on the degree of ventilation and the grade and location of the release. Table D-1 considers the zone ratings for enclosures containing sources of release within the volume, whilst Table D-2 considers the zone ratings for enclosures that do not have internal sources of release but that are adjacent to other hazardous areas, arising from external sources. Fig. D-1 provides a flow chart that defines when the different categories of ventilation apply.

Attention is drawn to the notes to Table D-2, in particular to Note 1. Continuous grades of release in enclosures are not acceptable practice unless small with local artificial or dilution ventilation, and primary grades should be avoided as far as is practicable or made as small as possible. This zoning would be applied to the whole of the enclosure, with the exception of the situation in Note 6, in which the zone created by a release is small in relation to the size of the building, and sufficient ventilation is present to prevent accumulation above 25 percent of the lower flammable limit of the bulk atmosphere. Under these conditions, local zoning may be allowed. The situation when there are no internal sources are specified in Table D-2. The footnotes to Table D-2 explains the reasoning for the different zone classifications.

D-6 THE EFFECT OF LOSS OF VENTILATION ON THE AREA CLASSIFICATION OF AN ENCLOSED AREA

In enclosed areas with artificial ventilation, the classification guidance given in Tables D-1 and D-2 is based on the specified ventilation operating effectively. If this ventilation were to fail the classification situation would revert to that of 'inadequate' ventilation in these tables, hence it is necessary to consider what measures should be taken to prevent this occurring, or what additional back-up systems are needed. The ventilation system should be designed to be reliable, with, for example, automatic start-up of a standby fan in the event of primary fan failure. Power for the main and standby fans should not be from a common supply. However, whilst total ventilation failure is unlikely it is foreseeable and the actions required are considered below.

D-6.1 Provisions for Loss of Adequate Ventilation

An enclosed area classified as Zone 2 by virtue of adequate ventilation normally contains only secondary grade sources of release and/or openings into Zone 2 areas. It may sometimes contain small primary grade sources. On loss of adequate ventilation there will not necessarily be

Table D-1 Enclosed Area with an Internal Source of Release — Effect of Ventilation Type on Zone
(*Clauses* D-5.1 *and* D-6)

Sl No.	Grade of Internal Release Source	Type of Ventilations			
		Inadequate[2)]	Adequate[3)]	Dilution[4)]	Over-pressure
(1)	(2)	(3)	(4)	(5)	(6)
i)	Continuous	Zone 0 [1)]	Zone 0 [1)]	Non-hazardous	Not applicable where there is an internal primary or continuous grade of release, but may be applicable in conjunction with adequate ventilation to maintain an enclosed area containing only secondary grade release as Zone 2 when surrounded by a Zone 0 or 1 area.
ii)	Primary	Zone 1 [1)]	Zone 1 [1)]	Non-hazardous	
iii)	Secondary	Zone 1	Zone 2	Non-hazardous	

NOTES

1 Location of continuous or primary grade sources within an enclosed area is not acceptable practice and should be avoided.

2 With inadequate ventilation, for a source within an enclosed area the external zone classification will be: for continuous grade release: Zone 0; for a primary grade release: Zone 1; for a secondary grade release: Zone 2.

3 With adequate ventilation, for a source within an enclosed area the external zone classification will be the same as that of the enclosed area itself.

4 *See* **D-3.3.2.**

5 An area within a larger enclosure subject to local artificial ventilation, that is by extractor fan, should be classified according to the local ventilation rate in the local area, that is, either dilution or adequate depending on which is met.

6 With a source of small hazard radius, for example, a sample point, the ventilation locally can sometimes be high enough to prevent the source influencing the classification of the whole enclosure. There would still be a local Zone 1 or Zone 2 around the source and the extent of this zone should be greater than in the open air, typically about twice the dimensions.

Table D-2 Enclosed Area with No Internal Source of Release but Adjacent to an External Hazard Zone — Effect of Ventilation Type on Zone
(*Clauses* D-2.4, D-5.1 *and* D-6.1)

Sl No.	Grade of Internal Release Source	Type of Ventilations			
		Inadequate	Adequate	Dilution	Over-pressure
(1)	(2)	(3)	(4)	(5)	(6)
i)	Continuous, that is Zone 0	Zone 0 [1)]	Zone 0 [1)]	Not applicable	Non-hazardous with source outside enclosed area, but see failure mode (*see* **D-6.2**).
ii)	Primary, that is Zone 1	Zone 1 [1)]	Zone 1 [1)]	Not applicable	
iii)	Secondary, that is Zone 2	Zone 1 [2)]	Zone 2	Not applicable	

NOTES

1 Location of an enclosed area without over-pressure protection in a Zone 0 or Zone 1 is not acceptable practice and should be avoided.

2 An inadequately ventilated enclosed area within an external Zone 2 and not containing a source of release may sometimes be classified as Zone 2 when the only aperture is a self-closing vapour-tight door. The frequency of door opening and the ventilation level must be considered to assess the risk.

an immediate development of a flammable atmosphere and it may be considered acceptable, subject to monitoring of the atmosphere and of plant conditions, to continue for a short period to operate equipment only suitable for Zone 2. Nevertheless, there should be an audio-visual alarm to indicate ventilation loss and a written procedure to cover both the degree of monitoring necessary and the action to be taken if mechanical ventilation fails. Fixed gas detectors should normally be provided. Equipment not suitable for Zone 1 should be electrically isolated immediately if gas is detected, or the source of the release stopped if more practicable. A master switch is normally provided to facilitate the electrical isolation when necessary.

D-6.2 Provisions for the Loss of Dilution Ventilation

An enclosed area classified as non-hazardous by virtue of dilution ventilation normally contains primary grade sources of release and may contain small continuous grade sources. If dilution ventilation is the basis of safety, an automatic switch-over to a back-up power supply must be provided. The back-up supply must,

as a minimum, operate for sufficient time to enable the plant to be shut down. An audio-visual alarm should be provided.

D-6.3 Provision for the Loss of Over-pressure Ventilation

An enclosed area with over-pressure ventilation is separated by vapour-tight barriers from adjacent hazardous areas and contains no continuous or primary grade sources of release. On loss of over-pressure ventilation, therefore, the development of flammable atmosphere within the area is likely to be slow and it is not normally necessary immediately to isolate electrical equipment. Nevertheless, there should be an audio-visual alarm to indicate ventilation loss and a written procedure to cover the electrical isolation that would be required if the ventilation loss persisted. A master switch is normally provided to facilitate the electrical isolation when necessary. In general this should be applied to any equipment not of a type of protection suitable for use in the adjacent hazardous area. Fixed gas detectors should normally be provided. Equipment not suitable for use in a Zone 1 area should be electrically isolated immediately, if gas is detected.

D-6.4 Reliability, Location and Choice of Fixed Gas Detectors

The need for fixed gas detection to monitor, alarm and, as appropriate, initiate shutdown has been stated in the preceding measures for protection against loss of artificial ventilation by dilution ventilation or pressurization. In view of the difficulties in regard to the accuracy of some gas detector types, specialist guidance should be sought in respect of their selection & location, and also the choice of alarm settings (in some cases these may be as low as 10 percent LFL for audible alarm, with a second trigger, say at 50 percent for shutdown). It may well be necessary, to avoid false indications and possible inadvertent shutdown, to apply coincidence voting arrangements where monitoring is carried out, employing three detectors in which operation of any detector at low level will sound an alarm and where coincidence operation of two out of the three at high level will activate the shutdown. It should be noted that gas detectors are not intrinsically safe and must be certified for the groups of gases in which they will operate. Both gas group and temperature class must be specified.

MGIPF—892 Deptt of BIS/2008—11 2 2009—300 Books

Bureau of Indian Standards

BIS is a statutory institution established under the *Bureau of Indian Standards Act*, 1986 to promote harmonious development of the activities of standardization, marking and quality certification of goods and attending to connected matters in the country.

Copyright

BIS has the copyright of all its publications. No part of these publications may be reproduced in any form without the prior permission in writing of BIS. This does not preclude the free use, in the course of implementing the standard, of necessary details, such as symbols and sizes, type or grade designations. Enquiries relating to copyright be addressed to the Director (Publications), BIS.

Review of Indian Standards

Amendments are issued to standards as the need arises on the basis of comments. Standards are also reviewed periodically; a standard along with amendments is reaffirmed when such review indicates that no changes are needed; if the review indicates that changes are needed, it is taken up for revision. Users of Indian Standards should ascertain that they are in possession of the latest amendments or edition by referring to the latest issue of 'BIS Catalogue' and 'Standards : Monthly Additions'.

This Indian Standard has been developed from Doc: No. ETD 22 (5922).

Amendments Issued Since Publication

Amend No.	Date of Issue	Text Affected

BUREAU OF INDIAN STANDARDS

Headquarters :

Manak Bhavan, 9 Bahadur Shah Zafar Marg, New Delhi 110 002
Telephones : 2323 0131, 2323 3375, 2323 9402

Telegrams : Manaksanstha
(Common to all offices)

Regional Offices :		Telephone
Central	: Manak Bhavan, 9 Bahadur Shah Zafar Marg, NEW DELHI 110 002	2323 7617, 2323 3841
Eastern	: 1/14 C.I.T. Scheme VII M, V. I. P. Road, Kankurgachi, KOLKATA 700 054	2337 8499, 2337 8561, 2337 8626, 2337 9120
Northern	: SCO 335-336, Sector 34-A, CHANDIGARH 160 022	260 3843, 260 9285
Southern	: C.I.T. Campus, IV Cross Road, CHENNAI 600 113	2254 1216, 2254 1442, 2254 2519, 2254 2315
Western	: Manakalaya, E9 MIDC, Marol, Andheri (East), MUMBAI 400 093	2832 9295, 2832 7858, 2832 7891, 2832 7892

Branches : AHMEDABAD. BANGALORE. BHOPAL. BHUBANESHWAR. COIMBATORE. FARIDABAD. GHAZIABAD. GUWAHATI. HYDERABAD. JAIPUR. KANPUR. LUCKNOW. NAGPUR. PARWANOO. PATNA. PUNE. RAJKOT. THIRUVANANTHAPURAM. VISAKHAPATNAM.

Printed by the Manager, Govt. of India Press, Faridabad