STUDY MATERIAL FOR ELECTRICAL SUPERVISOR LICENSE EXAMS (DOMESTIC AND INDUSTRIAL)

Solved MCQs and Question Papers from State Electricity Board Exams for Supervisor License (Supervisor Certificate of Competency)

SUDESH K JAIN



Click to Buy
Amazon | Flipkart | Pothi Store

IS 3427 : 1997
IEC 298 (1990)

भारतीय मानक

(Reaffirmed 2002)

1 के वी से 52 के वी तक के रेटित वोल्टता की ए. सी. धातु चढ़े स्विचगियर और नियंत्रणगियर

(पहला पुनरीक्षण)

Indian Standard

A.C. METAL ENCLOSED SWITCHGEAR AND CONTROLGEAR FOR RATED VOLTAGES ABOVE 1 kV AND UP TO AND INCLUDING 52 kV

(First Revision)

ICS 29.120.60

© BIS 1997

BUREAU OF INDIAN STANDARDS
MANAK BHAVAN, 9 BAHADUR SHAH ZAFAR MARG
NEW DELHI 110002

July 1997

Price Group 15

High Voltage Switchgear and Controlgear Sectional Committee, ET 08

CONTENTS

Page

NATIONAL FOREWORD 3

SECTION ONE — GENERAL

Clause
1. Scope 5

SECTION TWO — SERVICE CONDITIONS

2. Normal and special service conditions 5

SECTION THREE — TERMS AND DEFINITIONS

3. Definitions 6

SECTION FOUR — RATED CHARACTERISTICS

4. Rating 10
4.1 Rated voltage 10
4.2 Rated insulation level 10
4.3 Rated frequency 10
4.4 Rated normal current and temperature rise 10
4.5 Rated short-time withstand current 11
4.6 Rated peak withstand current 11
4.7 Rated duration of short circuit 11
4.8 Rated supply voltage of closing and opening devices and auxiliary circuits 11
4.9 Rated supply frequency of operating devices and auxiliary circuits 11
4.10 Rated pressure of compressed gas supply for operation 11
4.101 Rated filling pressure (of gas-filled compartments) 11

SECTION FIVE — RULES FOR DESIGN AND CONSTRUCTION

5. Design and construction 11
5.1 Requirements for liquids in switchgear and controlgear 12
5.2 Requirements for gases in switchgear and controlgear 12
5.3 Earthing 12
5.4 Auxiliary equipment 13
5.5 Dependent power closing 13
5.6 Stored energy closing 13
5.7 Operation of releases 13
5.8 Low and high pressure interlocking devices 13
5.9 Nameplates 13
5.101 Degree of protection and internal fault 14
5.102 Enclosure 15
5.103 Partitions and shutters 17
5.104 Pressure relief of gas-filled compartments 18
5.105 Disconnectors and earthing switches 18
5.106 Interlocks 19
5.107 Provisions for dielectric tests on cables 20

SECTION SIX — RULES FOR TYPE TESTS

6. Type tests 20
6.1 Dielectric tests 21
6.2 Radio interference voltage (RIV) tests 24
6.3 Temperature-rise tests 24
6.4 Measurement of the resistance of the main circuit 24
6.5 Short-time and peak withstand current tests 24

Page

6.101 Verification of making and breaking capacities ... 25
6.102 Mechanical operation tests ... 26
6.103 Verification of the degree of protection ... 26
6.104 Pressure withstand test for gas-filled compartments ... 26
6.105 Gas tightness tests of gas-filled compartments ... 26
6.106 Measurement of leakage currents ... 27
6.107 Weatherproofing test ... 27
6.108 Arcing due to internal fault ... 27

SECTION SEVEN — RULES FOR ROUTINE TESTS

7. Routine tests ... 28
7.1 Power-frequency voltage tests on the main circuit ... 28
7.2 Dielectric tests on auxiliary and control circuits ... 28
7.3 Measurement of the resistance of the main circuit ... 28
7.101 Partial discharge measurement ... 29
7.102 Mechanical operation tests ... 29
7.103 Pressure tests of gas-filled compartments ... 29
7.104 Gas tightness tests of gas-filled compartments ... 29
7.105 Tests of auxiliary electrical, pneumatic and hydraulic devices ... 29
7.106 Verification of correct wiring ... 29
7.107 Tests after erection on site ... 29
7.108 Measurement of gas condition after filling on site ... 30

SECTION EIGHT — GENERAL INFORMATION

8. Guide to the selection of switching devices for service ... 30
9. Information to be given with enquiries, tenders and orders ... 30
9.101 Information with enquiries and orders ... 30
9.102 Information with tenders ... 31
10. Rules for transport, storage, erection and maintenance ... 32
10.1 Conditions during transport, storage and erection ... 32
10.2 Erection (mounting) ... 32
10.3 Maintenance ... 32

FIGURE 1 — Standard test finger ... 33

ANNEX AA — Internal fault ... 34

ANNEX BB — Method of calculating the cross-sectional area of bare conductors with regard to thermal stresses due to currents of short duration ... 42

ANNEX CC — Recommended method for the weatherproofing test for outdoor metal-enclosed switchgear and controlgear ... 43

ANNEX DD — Guide for voltage tests after erection on site ... 46

ANNEX EE — Rated insulation level for Series II ... 47

ANNEX FF — Partial discharge measurement ... 48

ANNEX GG — Gas tightness specifications and tests ... 53

Indian Standard

A.C. METAL ENCLOSED SWITCHGEAR AND CONTROLGEAR FOR RATED VOLTAGES ABOVE 1 kV AND UP TO AND INCLUDING 52 kV

(First Revision)

NATIONAL FOREWORD

This Indian Standard which is identical to IEC Pub 298 (1990) 'A.C. metal-enclosed switchgear and controlgear for rated voltages above 1 kV and up to and including 52 kV', issued by the International Electrotechnical Commission, was adopted by the Bureau of Indian Standards on the recommendations of the High Voltage Switchgear and Controlgear Sectional Committee, ET 08, and approval of the Electrotechnical Division Council.

While taking up the revision of IS 3427 : 1969 'Specification for metal-enclosed switchgear and controlgear for voltages above 1 kV but not exceeding 11 kV', the Sectional Committee, ET 08, decided to adopt IEC 298 (1990) to cover the requirements of metal encolsed switchgear and controlgear up to 52 kV.

This standard, therefore, replaces and cancels IS 3427 : 1969.

The text of the IEC Standard along with its Amendment No. 1 has been approved as suitable for publication as Indian Standard without deviations.

Corrigendum issued by IEC in 1995 has been incorporated.

In this standard, certain terminology and conventions are not identical with those used in Indian Standards. Attention is specially drawn to the following:

a) Wherever the words 'International Standard' appear, referring to this standard, they should be read as 'Indian Standard'.

b) Comma (,) has been used as a decimal marker while in Indian Standards, the current practice is to use a point (.) as the decimal marker.

Only the English language text in the International Standard has been retained while adopting it in this Indian Standard.

For the purpose of deciding whether a particular requirement of this standard is complied with, the final value, observed or calculated, expressing the result of a test or analysis, shall be rounded off in accordance with IS 2 : 1960 'Rules for rounding off numerical values (*revised*)'. The number of significant places retained in the rounded off value should be the same as that of the specified value in this standard.

In this adopted standard, reference appears to certain International Standards for which Indian Standards also exist. The corresponding Indian Standards which are to be substituted in their place are listed below along with their degree of equivalence:

International Standard	*Corresponding Indian Standard*	*Degree of Equivalence*
IEC 50 (151) : 1978 International electrotechnical vocabulary, Chapter 151 : Electrical and magnetic devices	IS 1885 (Part 74) : 1979	Identical
IEC 50 (441) : 1984 International electrotechnical vocabulary, Chapter 441 : Switchgear, controlgear and fuses	IS 1885 (Part 17) : 1979	Technically equivalent

International Standard	*Corresponding Indian Standard*	*Degree of Equivalence*
IEC 129 : 1984 AC disconnectors and earthing switches	IS 9921 (Parts 1 to 4)	Technically equivalent
IEC 137 : 1984 Bushings for AC voltages above 1 000 V	IS 2099 : 1986	Technically equivalent
IEC 243-1 : 1988 Methods of test for electric strength of solid insulating materials — Part 1 : Tests at power frequencies	IS 2584 : 1963	Technically equivalent
IEC 270 : 1981 Partial discharge measurements	IS 6209 : 1982	Technically equivalent
IEC 466 : 1987 AC insulation enclosed switchgear and controlgear for rated voltages above 1 kV and up to and including 38 kV		No ISS exists
IEC 480 : 1974 Guide for the checking of SF6 taken from electrical equipment		No ISS exists
IEC 517 : 1990 Gas insulated metal-enclosed switchgear for rated voltages of 72.5 kV and above	Under print	Identical
IEC 529 : 1989 Degree of protection provided by enclosures (IP Code)	IS 12063 : 1987	Technically equivalent
IEC 694 : 1980 Common clauses for high voltage switchgear and controlgear standards	IS 12729 : 1988	Technically equivalent

SECTION ONE — GENERAL

1. Scope

This standard specifies requirements for factory-assembled metal-enclosed switchgear and controlgear for alternating current of rated voltages above 1 kV and up to and including 52 kV for indoor and outdoor installation, and for service frequencies up to and including 60 Hz.

For metal-enclosed switchgear and controlgear containing gas-filled compartments, the design pressure is limited to a maximum of 3 bar (gauge). Gas-filled compartments having a design pressure exceeding 3 bar (gauge) shall be designed and tested in accordance with I E C 517.

Metal-enclosed switchgear and controlgear for special use, for example in flammable atmospheres, in mines or on board ships, may be subject to additional requirements.

This standard does not deal with components contained in metal-enclosed switchgear and controlgear for which individual specifications exist.

NOTES

1 Switchgear and controlgear assemblies having an insulation enclosure are covered by I E C 466.

2 Metal-enclosed switchgear and controlgear for rated voltages above 52 kV insulated by air at atmospheric pressure may be covered by this standard taking into account the insulation levels of I E C 694.

3 Liquid-insulated hermetically sealed compartments are equal to gas-filled compartments with respect to independence from ambient atmosphere.

SECTION TWO — SERVICE CONDITIONS

2. Normal and special service conditions

Unless otherwise specified in this standard, the metal-enclosed switchgear and controlgear is designed to be used under normal service conditions.

Refer to Clause 2 of I E C 694.

For outdoor installation it is assumed that inside the enclosure, normal indoor conditions prevail. If necessary, appropriate measures shall be taken, such as air conditioning, so that common indoor components may be used. This does not apply to gas-filled compartments.

SECTION THREE — TERMS AND DEFINITIONS

3. Definitions

For the definitions of general terms used in this standard, reference is made to the International Electrotechnical Vocabulary (IEV), namely I E C 50 (441) and I E C 50 (151).

The following definitions apply for the purpose of this standard:

3.101 *Switchgear and controlgear*

A general term covering switching devices and their combination with associated control, measuring, protective and regulating equipment, also assemblies of such devices and equipment with associated interconnections, accessories, enclosures and supporting structures (IEV 441-11-01).

3.102 *Metal-enclosed switchgear and controlgear*

Switchgear and controlgear assemblies with an external metal enclosure intended to be earthed and complete except for external connections (IEV 441-12-04).

NOTE — The metal-enclosed switchgear and controlgear is subdivided into three types:
— metal-clad switchgear and controlgear;
— compartmented switchgear and controlgear (with one or more non-metallic partitions);
— cubicle switchgear and controlgear.

3.102.1 *Metal-clad switchgear and controlgear*

Metal-enclosed switchgear and controlgear in which components are arranged in separate compartments with metal partitions intended to be earthed.

NOTES

1 This term applies to metal-enclosed switchgear and controlgear with metal partitions providing the degree of protection included in table 1 (or higher) and having separate compartments at least for the following components:

a) each main switching device;

b) components connected to one side of a main switching device, for example feeder circuit;

c) components connected to the other side of the main switching device, for example busbars; where more than one set of busbars is provided, each set being in a separate compartment.

2 Metal-enclosed switchgear and controlgear having metal partitions and meeting all the requirements of note 1, may utilize an insulating shutter barrier as a part of the shutter arrangement, the combination of which provides the degree of protection included in table 1 (or higher) and satisfies the requirements of Sub-clause 5.103.1 for partitions and shutters made of insulating material.

3.102.2 *Compartmented switchgear and controlgear* (with non-metallic partitions)

Metal-enclosed switchgear and controlgear in which components are arranged in separate compartments as for metal-clad switchgear and controlgear, but with one or more non-metallic partitions providing the degree of protection included in table 1 (or higher).

NOTE — Metal-enclosed switchgear and controlgear in which the main circuit components are individually embedded in solid insulating material can be considered as an alternative, provided that the conditions specified in I E C 466 are met.

3.102.3 *Cubicle switchgear and controlgear*

Metal-enclosed switchgear and controlgear, other than metal-clad and compartmented switchgear and controlgear.

NOTE — This term applies to switchgear and controlgear having a metal enclosure and having either:

a) a number of compartments less than that required for metal-clad or compartmented switchgear and controlgear;

b) partitions having a degree of protection lower than those included in table 1;

c) no partitions.

3.103 *Transport unit*

A part of metal-enclosed switchgear and controlgear suitable for shipment without being dismantled.

3.104 *Functional unit*

A part of metal-enclosed switchgear and controlgear comprising all the components of the main circuits and auxiliary circuits that contribute to the fulfilment of a single function (IEV 441-13-04).

NOTE — Functional units may be distinguished according to the function for which they are intended, for example: incoming unit, outgoing unit, etc.

3.105 *Enclosure*

A part of metal-enclosed switchgear and controlgear providing a specified degree of protection of equipment against external influences and a specified degree of protection against approach to or contact with live parts and against contact with moving parts (IEV 441-13-01).

3.106 *Compartment*

A part of metal-enclosed switchgear and controlgear enclosed except for openings necessary for interconnection, control or ventilation (IEV 441-13-05).

NOTES

1 A compartment may be designated by the main component contained therein, e.g. circuit-breaker compartment, busbar compartment, etc.

2 Openings necessary for interconnection between compartments are closed with bushings or other equivalent means.

3 Busbar compartments may extend through several functional units without the need for bushings or other equivalent means.

3.107 *Gas-filled compartment*

A compartment of metal-enclosed switchgear and controlgear in which the gas pressure is maintained by one of the following systems:

a) controlled pressure system;

b) closed pressure system;

c) sealed pressure system.

(Refer to annex GG.)

NOTE — Several gas-filled compartments may be interconnected to a common gas-system (gas-tight assembly).

3.108 *Component*

An essential part of the main or earthing circuits of metal-enclosed switchgear and controlgear which serves a specific function (for example circuit-breaker, disconnector, switch, fuse, instrument transformer, bushing, busbar, etc.).

3.109 *Partition*

A part of metal-enclosed switchgear and controlgear separating one compartment from other compartments (IEV 441-13-06).

3.110 *Shutter*

A part of metal-enclosed switchgear and controlgear that can be moved from a position where it permits contacts of a removable part to engage fixed contacts, to a position where it becomes a part of the enclosure or partition shielding the fixed contacts (IEV 441-13-07).

3.111 *Bushing*

A structure carrying one or more conductors through an enclosure and insulating it therefrom, including the means of attachment.

3.112 *Removable part*

A part of metal-enclosed switchgear and controlgear that may be removed entirely from the metal-enclosed switchgear and controlgear and replaced, even though the main circuit is alive (IEV 441-13-08).

3.113 *Withdrawable part*

A removable part of metal-enclosed switchgear and controlgear that can be moved to positions in which an isolating distance or segregation between open contacts is established, while the part remains mechanically attached to the enclosure (IEV 441-13-09).

3.114 *Segregation* (of conductors)

An arrangement of conductors with earthed metal interposed between them in such a manner that disruptive discharges can only occur to earth (IEV 441-11-11).

NOTE — A segregation may be established between the conductors as well as between the open contacts of a switching device.

3.115 *Service position* (connected position)

The position of a removable part in which it is fully connected for its intended function (IEV 441-16-25).

3.116 *Earthing position*

The position of a removable part in which the closing of a mechanical switching device causes a main circuit to be short-circuited and earthed (IEV 441-16-26).

3.117 *Test position* (of a withdrawable part)

The position of a withdrawable part in which an isolating distance or segregation is established in the main circuit and in which the control circuits are connected (IEV 441-16-27).

3.118 *Disconnected position* (of a withdrawable part)

The position of a withdrawable part in which an isolating distance or segregation is established in the circuits of the withdrawable part, that part remaining mechanically attached to the enclosure (IEV 441-16-28).

NOTE — In high-voltage metal-enclosed switchgear and controlgear, the auxiliary circuits may not be disconnected.

3.119 *Removed position* (of a removable part)

The position of a removable part when it is outside and mechanically and electrically separated from the enclosure (IEV 441-16-29).

3.120 *Main circuit*

All the conductive parts of metal-enclosed switchgear and controlgear included in a circuit which is intended to transmit electrical energy (IEV 441-13-02).

3.121 *Auxiliary circuit*

All the conductive parts of metal-enclosed switchgear and controlgear included in a circuit (other than the main circuit) intended to control, measure, signal and regulate (IEV 441-13-03).

NOTE — The auxiliary circuits of metal-enclosed switchgear and controlgear include the control and auxiliary circuits of the switching devices.

3.122 *Rated value*

A quantity value assigned, generally by a manufacturer, for a specified operating condition of the metal-enclosed switchgear and controlgear (IEV 151-04-03).

NOTE — See Section Four for individual rated values.

3.123 *Degree of protection*

The degree of protection provided by an enclosure to protect persons against contact with or approach to live parts and against contact with moving parts inside the enclosure and to protect the equipment against ingress of solid bodies.

3.124 *Ambient air temperature* (of metal-enclosed switchgear and controlgear)

The temperature, determined under prescribed conditions, of the air surrounding the enclosure of metal-enclosed switchgear and controlgear.

3.125 *Disruptive discharge*

Phenomena associated with the failure of insulation under electric stress, in which the discharge completely bridges the insulation under test, reducing the voltage between the electrodes to zero or nearly to zero.

NOTES

1 The term applies to discharges in solid, liquid and gaseous dielectrics and to combinations of these.

2 A disruptive discharge in a solid dielectric produces permanent loss of dielectric strength (non-self-restoring insulation); in a liquid or gaseous dielectric, the loss may be only temporary (self-restoring insulation).

3 The term "sparkover" is used when a disruptive discharge occurs in a gaseous or liquid dielectric.

The term "flashover" is used when a disruptive discharge occurs over the surface of a solid dielectric in gaseous or liquid medium.

The term "puncture" is used when a disruptive discharge occurs through a solid dielectric.

3.126 *Minimum functional pressure* (of gas-filled compartments)

The gas pressure in bars (gauge) referred to atmospheric air conditions of 20 °C and 1 013 hPa at and above which the rated values of the switchgear are maintained.

3.127 *Design pressure* (of gas-filled compartments)

The pressure in bars (gauge) used to determine the design of a gas-filled compartment.

3.128 *Design temperature* (of gas-filled compartments)

The highest temperature which can be reached by the gas under service conditions.

SECTION FOUR — RATED CHARACTERISTICS

4. Rating

The ratings of metal-enclosed switchgear and controlgear are the following:

a) rated voltage and number of phases;
b) rated insulation level;
c) rated frequency;
d) rated normal current (for main circuits);
e) rated short-time withstand current (for main and earthing circuits);
f) rated peak withstand current, if applicable (for main and earthing circuits);
g) rated duration of short circuit;
h) rated values of the components forming part of the metal-enclosed switchgear and controlgear including their operating devices and auxiliary equipment;
i) rated filling pressure (of gas-filled compartments).

For the co-ordination of rated voltages, rated short-time withstand currents, rated peak withstand currents and rated normal currents of metal-enclosed switchgear and controlgear reference is made to I E C 56 and to I E C 129.

4.1 *Rated voltage*

Refer to Sub-clauses 4.1 and 4.1.1 of I E C 694.

NOTE — Components forming part of metal-enclosed switchgear and controlgear may have individual values of rated voltage in accordance with their relevant standards.

4.2 *Rated insulation level*

Refer to Sub-clauses 4.2 and 4.2.1 of I E C 694. For metal-enclosed switchgear and controlgear the rated withstand voltage values, based on current practice in Canada and the United States of America, are given in the table of annex EE.

4.3 *Rated frequency*

Refer to Sub-clause 4.3 of I E C 694 with the addition of the following rated values:

16⅔ Hz and 25 Hz

4.4 *Rated normal current and temperature rise*

4.4.1 *Rated normal current*

Refer to Sub-clause 4.4.1 of I E C 694 with the addition of the following paragraph:

Some main circuits of metal-enclosed switchgear and controlgear (e.g. busbars, feeder circuits, etc.) may not have the same value of rated normal current.

4.4.2 *Temperature rise*

Refer to Sub-clause 4.4.2 of I E C 694 with the addition of the following supplement:

The temperature rise of components contained in metal-enclosed switchgear and controlgear which are subject to individual specifications not covered by the scope of I E C 694 shall not exceed the temperature-rise limits permitted in the relevant standard for that component.

The maximum permissible temperatures and temperature rises to be taken into account for busbars are those specified for contacts, connections and metal parts in contact with insulation, as the case may be.

The temperature rise for accessible enclosures and covers shall not exceed 30 K. In the case of enclosures and covers which are accessible but need not be touched during normal operation, the temperature-rise limit may be increased by 10 K.

4.5 *Rated short-time withstand current*

Refer to Sub-clause 4.5 of I E C 694.

4.6 *Rated peak withstand current*

Refer to Sub-clause 4.6 of I E C 694.

NOTE — In principle, the rated short-time withstand current and the rated peak withstand current of a main circuit cannot exceed the corresponding rated values of the weakest of its series connected components. However, for each circuit or compartment, advantage may be taken of apparatus limiting the short-circuit current, such as current-limiting fuses, reactors, etc.

4.7 *Rated duration of short circuit*

Refer to Sub-clause 4.7 of I E C 694.

4.8 *Rated supply voltage of closing and opening devices and auxiliary circuits*

Refer to Sub-clause 4.8 of I E C 694.

4.9 *Rated supply frequency of operating devices and auxiliary circuits*

Refer to Sub-clause 4.9 of I E C 694.

4.10 *Rated pressure of compressed gas supply for operation*

Refer to Sub-clause 4.10 of I E C 694.

4.101 *Rated filling pressure* (of gas-filled compartments)

The pressure in bars (gauge) assigned by the manufacturer referred to atmospheric air conditions of 20 °C and 1 013 hPa at which the gas-filled compartment is filled before being put into service.

SECTION FIVE — RULES FOR DESIGN AND CONSTRUCTION

5. Design and construction

Metal-enclosed switchgear and controlgear shall be designed so that normal service, inspection and maintenance operations, including the usual checking of phase sequence,

earthing of connected cables, locating of cable faults, voltage tests on connected cables or other apparatus and the elimination of dangerous electrostatic charges, can be carried out safely.

All components of the same rating and construction which may need to be replaced shall be interchangeable.

If there are removable parts with different ratings and if parts are interchangeable within the assembly of metal-enclosed switchgear and controlgear, any possible combination of removable and fixed parts shall withstand the rated insulation level specified for the fixed parts of the equipment concerned.

The various components contained within the enclosure are subject to the individual specifications applying to them.

For main circuits with current-limiting fuses, the manufacturer of the switchgear and controlgear may assign the fused short-circuit current.

5.1 *Requirements for liquids in switchgear and controlgear*

Refer to Sub-clause 5.1 of I E C 694.

5.2 *Requirements for gases in switchgear and controlgear*

Refer to Sub-clause 5.2 of I E C 694.

NOTE — For checking of sulphur hexafluoride in service, refer to I E C 480.

5.3 *Earthing*

5.3.1 *Earthing of the main circuit*

To ensure safety during maintenance work, all parts of the main circuit to which access is required or provided shall be capable of being earthed prior to becoming accessible. This does not apply to withdrawable and removable parts which become accessible after being separated from the switchgear.

5.3.2 *Earthing of the enclosure*

Refer to 5.3. of I E C 694 with the addition of the following supplement:

An earthing conductor shall be provided extending the whole length of the metal-enclosed switchgear and controlgear. The current density in the earthing conductor, if of copper, shall not exceed 200 A/mm^2 under the specified earth fault conditions; however, its cross-section area shall be not less than 30 mm^2. It shall be terminated by an adequate terminal intended for connection to the earth system of the installation.

NOTE — If the earthing conductor is not made of copper, equivalent thermal and mechanical requirements should be met.

In general, the continuity of the earth system shall be ensured taking into account the thermal and mechanical stresses caused by the current it may have to carry. The maximum value of earth fault currents depends upon the type of system neutral earthing employed and shall be indicated by the user.

Where earthing connections have to carry the full three-phase short-circuit current (as in the case of the short-circuiting connections used for earthing devices) these connections shall be dimensioned accordingly.

NOTE — As guidance, reference is made to a method of calculating cross-sectional areas of conductors given in annex BB.

The enclosure of each functional unit shall be connected to this earthing conductor. All the metallic parts intended to be earthed and not belonging to a main or auxiliary circuit, shall also be connected to the earthing conductor directly or through metallic structural parts.

For the interconnection within the functional unit, fastening by bolting or welding is acceptable for providing electrical continuity between the frame, covers, doors, partitions or other structural parts. Doors of the high-voltage compartments shall be connected to the frame by adequate means.

The metallic parts of a withdrawable part which are normally earthed shall also remain earth-connected in the test and disconnected positions under the prescribed conditions for the isolating distance (see I E C 129) and also in any intermediate position whilst the auxiliary circuits are not totally disconnected.

5.4 *Auxiliary equipment*

Refer to Sub-clause 5.4 of I E C 694.

5.5 *Dependent power closing*

Refer to Sub-clause 5.5 of I E C 694.

5.6 *Stored energy closing*

Refer to Sub-clause 5.6 of I E C 694.

5.7 *Operating of releases*

Refer to Sub-clause 5.7 of I E C 694.

5.8 *Low and high pressure interlocking devices*

Refer to Sub-clause 5.8 of I E C 694.

5.9 *Nameplates*

Refer to Sub-clause 5.9 of I E C 694 with the addition of the following supplement:

Metal-enclosed switchgear and controlgear, all their components and operating devices shall be provided with durable and clearly legible nameplates which shall contain the following information:

- manufacturer's name or trade mark;
- type designation or serial number;
- applicable rated values;
- number of the relevant standard.

The nameplates of each functional unit shall be legible during normal service. The removable parts, if any, shall have a separate nameplate with the data relating to the functional units they belong to, but this nameplate need only be legible when the removable part is in the removed position.

NOTE The word "rated" need not appear on the nameplate.

5.101 *Degree of protection and internal fault*

5.101.1 *Protection of persons against approach to live parts and contact with moving parts*

For metal-clad and for compartmented switchgear and controlgear, the degree of protection shall be specified separately for the enclosure and for partitions.

For cubicle switchgear and controlgear, it is only necessary to specify the degree of protection for the enclosure.

For main circuits of gas-filled compartments, no degree of protection needs to be specified.

The degree of protection against contact of persons with live parts of auxiliary circuits and with any moving parts (other than smooth rotating shafts and moving linkages) shall be indicated by means of the designation specified in table 1.

The characteristic numeral indicates the degree of protection provided by the enclosure with respect to persons, also to the equipment inside the enclosure.

Table 1 gives details of objects which will be "excluded" from the enclosure for each of the degrees of protection.

The term "excluded" implies that a part of the body or an object held by a person either will not enter the enclosure or, if it enters, that adequate clearance will be maintained and no moving part will be touched.

TABLE 1

Degree of protection	Protection against approach to live parts and contact with moving parts
IP2X	By fingers or similar objects of diameter greater than 12 mm
IP3X	By tools, wires, etc., of diameter or thickness greater than 2,5 mm
IP4X	By wires of diameter or strips of thickness greater than 1,0 mm
NOTE — The designation of the degree of protection corresponds to I E C 529.	

5.101.2 *Protection of equipment against external effects*

a) Protection against ingress of solid bodies: No additional provisions beyond those in Sub-clause 5.101.1 are to be taken.

b) Protection against weather: Equipment for outdoor installation provided with appropriate protective features is to be indicated by the characteristic letter W placed immediately after the letters IP.

c) Protection against ingress of water: No degree of protection is provided by indoor metal-enclosed switchgear and controlgear against harmful ingress of water.

5.101.3 *Protection of equipment against mechanical damage*

Under consideration. For the time being the manufacturer shall be consulted where enclosures may be subjected to mechanical impacts or similar effects.

5.101.4 *Internal fault*

Failure within the enclosure of metal-enclosed switchgear and controlgear due either to a defect or an exceptional service condition or mal-operation may initiate an internal arc.

There is little probability of such an event occurring in constructions which satisfy the requirements of this standard, but it cannot be completely disregarded.

Such an event may lead to the risk of injury, if persons are present, but with an even lower probability.

It is desirable that the highest possible degree of protection to persons should be provided. The principal objective should be to avoid such arcs or to limit their duration and consequences.

Experience has shown that faults are more likely to occur in some locations inside an enclosure than in others, so special attention should be paid to these.

For guidance, a list of such locations and of causes is given in table AA.1 of annex AA, columns (1) and (2). Measures to decrease the probability of internal faults or to reduce the risk are recommended in column (3). Examples of measures to limit the consequences of internal faults are given in table AA.2 of annex AA.

If such measures are considered to be insufficient then a test in accordance with annex AA may be agreed between the manufacturer and the user, to verify that the chosen criteria are fulfilled as agreed. This test covers only the case of an arc occurring entirely in air or in another insulating gas within the enclosure but not within components having a separate enclosure, for example switching devices and fuses, or within components like instrument transformers, etc.

Such a test should be unnecessary on those parts of circuits which are protected by current-limiting devices, for example fuses.

NOTE — The overpressure in the building caused by arcing due to an internal fault in the metal-enclosed switchgear and controlgear and the effects of the ejection of gases from pressure relief devices should be taken into consideration.

5.102 *Enclosure*

5.102.1 *General*

Enclosures shall be metallic. When the metal-enclosed switchgear and controlgear is installed, the enclosure shall provide at least the degree of protection specified in table 1. It shall also assure protection in accordance with the following conditions:

The floor surface, even if not metallic, may be considered as part of the enclosure. The measures to be taken in order to obtain the degree of protection provided by floor surfaces shall be subject to an agreement between manufacturer and user.

The walls of a room shall not be considered as parts of the enclosure.

Gas-filled compartments shall be capable of withstanding the normal and transient pressures to which they are subjected in service. While these compartments are permanently pressurized in service they are subjected to particular conditions of service which distinguish them from compressed air receivers and similar storage vessels. These conditions are:

— gas-filled compartments enclose the main circuit not only to prevent hazardous approach to live or moving parts but are so shaped that, when at or above the minimum functional pressure (see sub-clause 3.126), they ensure that the rated insulation level (see sub-clause 4.2) for the equipment is achieved (electrical rather than mechanical considerations predominate in determining the shape and materials employed);

— gas-filled compartments are normally filled with a non-corrosive gas, thoroughly dried, stable and inert; since measures to obtain the gas in this condition with only small

fluctuations in pressure are fundamental to the operation of the switchgear and since the compartments will not be subjected to internal corrosion, there is no need to make allowances for these factors in determining the design of the compartments;

— the service pressure is relatively low.

For outdoor installation, the manufacturer shall take into account the influence of climatic conditions.

5.102.2 *Design of gas-filled compartments*

The design of a gas-filled compartment shall be based on the design temperature and on the design pressure as defined in this standard.

The design temperature of the gas-filled compartment is generally the upper limit of ambient air temperature increased by the temperature rise of the gas due to the flow of rated normal current. Solar radiation should be taken into account if it has a significant effect.

The design pressure of the enclosure is at least the upper limit of the pressure reached within the enclosure at the design temperature.

Account shall be taken of the following:

a) the full differential pressure possible across the compartment walls or partitions, including any evacuation process if used during filling;

b) the resulting pressure in the event of an accidental leak between the compartments in the case of adjacent compartments having different service pressures;

c) the possibility of the occurrence of an internal fault (see Sub-clause 5.101.4).

5.102.3 *Tightness of gas-filled compartments*

The manufacturer shall state the pressure system used and the permissible gas-leakage rate for the gas-filled compartments (refer to annex GG).

If requested by the user, in order to permit entry to a gas-filled compartment of closed or controlled pressure systems, the permissible gas leakage across partitions should also be stated by the manufacturer.

For gas-filled compartments where the minimum functional pressure exceeds 1 bar (gauge) it is recommended that an indication be provided when the pressure at 20 °C has fallen below the minimum functional pressure (see Sub-clause 3.126).

A partition separating a compartment filled with insulating gas from a neighbouring compartment filled with liquid, such as a cable box or a voltage transformer, shall not show any leakage affecting the dielectric properties of the two media.

5.102.4 *Covers and doors*

Covers and doors which are parts of the enclosure shall be metallic. When they are closed, they shall provide the degree of protection specified for the enclosure.

Covers or doors shall not be made of woven wire mesh, expanded metal or similar. When ventilating openings and vent outlets are incorporated in the cover or door, reference is made to Sub-clause 5.102.6.

Two categories of covers or doors are recognized with regard to access to high-voltage compartments:

a) those which need not be opened for the normal purposes of operation or maintenance (fixed covers). It shall not be possible for them to be opened, dismantled or removed without the use of tools;

b) those which need to be opened for the normal purposes of operation (removable covers, doors).These shall not require tools for their opening or removal. They shall be provided with locking facilities (for example provision for padlocks), unless the safety of persons is assured by a suitable interlocking device.

With metal-clad or compartmented switchgear and controlgear, covers or doors should only be opened when the part of the main circuit contained in the compartment being made accessible is dead.

5.102.5 *Inspection windows*

Inspection windows shall provide at least the degree of protection specified for the enclosure.

They shall be covered by a transparent sheet of mechanical strength comparable to that of the enclosure. Precautions shall be taken to prevent the formation of dangerous electrostatic charges, either by clearance or by electrostatic shielding (for example a suitable earthed wire-mesh on the inside of the window).

The insulation between live parts of the main circuit and the inspection windows shall withstand the test voltages specified in Sub-clause 4.2.1 of I E C 694 for voltage tests to earth and between poles.

5.102.6 *Ventilating openings, vent outlets*

Ventilating openings and vent outlets shall be so arranged or shielded that the same degree of protection as that specified for the enclosure is obtained. Such openings may make use of wire mesh or the like provided that it is of suitable mechanical strength.

Ventilating openings and vent outlets shall be arranged in such a way that gas or vapour escaping under pressure does not endanger the operator.

5.103 *Partitions and shutters*

5.103.1 *General*

Partitions and shutters shall provide at least the degree of protection specified in table 1.

Partitions and shutters made of insulating material shall meet the following requirements:

a) the insulation between live parts of the main circuit and the accessible surface of insulating partitions and shutters shall withstand the test voltages specified in Sub-clause 4.2.1 of I E C 694 for voltage tests to earth and between poles;

b) apart from mechanical strength, the insulating material shall withstand likewise the test voltages specified in Item *a)*. The appropriate test methods given in I E C 243-1 should be applied;

c) the insulation between live parts of the main circuit and the inner surface of insulating partitions and shutters facing these shall withstand at least 150% of the rated voltage of the equipment;

d) if a leakage current may reach the accessible side of the insulating partitions and shutters by a continuous path over insulating surfaces or by a path broken only by small gaps of gas or liquid, it shall be not greater than 0,5 mA under the specified test conditions (see Sub-clause 6.104).

Openings in the enclosure of metal-enclosed switchgear and controlgear and in the partitions of metal-clad or compartmented switchgear and controlgear through which contacts of removable parts engage fixed contacts shall be provided with automatic shutters properly operated in normal service operations to assure the protection of persons in any of the positions defined in Sub-clauses 3.115 to 3.119.

If maintenance requirements imply that one set of fixed contacts shall be accessible through opened shutters, all the shutters shall be provided with means of locking them independently in the closed position or it shall be possible to insert a screen to prevent the live set of the fixed contacts being exposed.

NOTE — Conductors passing through metallic partitions are insulated by bushings or other equivalent means and the openings may be provided by bushings or shutters having non-metallic parts. Bushings shall comply with I E C 137.

5.103.2 *Partitions*

Partitions of metal-clad switchgear and controlgear shall be metallic and earthed.

Partitions of compartmented and cubicle switchgear and controlgear may be non-metallic, provided they do not become part of the enclosure in any of the positions defined in Sub-clauses 3.116 to 3.119. If partitions become part of the enclosure with the removable part in any of these positions, they shall be metallic, earthed and provide the degree of protection specified for the enclosure.

Partitions between two gas-filled compartments or between a gas-filled compartment and another compartment may be of insulating material provided they do not become part of the enclosure but are not intended by themselves to provide electrical safety of personnel, for which other means such as earthing of the equipment may be necessary; they shall, however, provide mechanical safety against the normal gas pressure still present in the adjacent compartment.

NOTES

1 A partition becomes a part of the enclosure, if it is accessible in any of the positions defined in Sub-clauses 3.116 to 3.119.

2 If a door is provided which can be closed in the positions defined in Sub-clauses 3.115 to 3.119 the partition behind the door is not considered to be a part of the enclosure.

5.103.3 *Shutters*

The shutters of the three types of metal-enclosed switchgear and controlgear may be either metallic or non-metallic.

If shutters are of insulating material, they shall not become part of the enclosure. If they are metallic, they shall be earthed, and if they become part of the enclosure, they shall provide the degree of protection specified for the enclosure.

5.104 *Pressure relief of gas-filled compartments*

Where pressure relief devices are provided, they shall be arranged so as to minimize the danger to an operator during the time that he is performing his normal operating duties if gases or vapours are escaping under pressure.

In certain designs pressure relief may be achieved by allowing the arc to burn through the enclosure at designated points. Where such means are employed, the resultant hole is deemed to be a pressure relief device.

5.105 *Disconnectors and earthing switches*

The devices for ensuring the isolating distance between the high-voltage conductors are considered to be disconnectors which shall comply with I E C 129, except for mechanical operation tests (see Sub-clauses 6.102 and 7.102).

The requirement that it shall be possible to know the operating position of the disconnector or earthing switch is met if one of the following conditions is fulfilled:

— the isolating distance is visible;
— the position of the withdrawable part, in relation to the fixed part, is clearly visible and the positions corresponding to full connection and full isolation are clearly identified;
— the position of the disconnector or earthing switch is indicated by a reliable indicating device.

Any removable part shall be so attached to the fixed part that its contacts will not open inadvertently due to forces which may occur in service, in particular those due to a short circuit.

5.106 *Interlocks*

Interlocks between different components of the equipment are provided for reasons of safety and for convenience of operation. The following provisions are mandatory for main circuits:

a) Metal-enclosed switchgear and controlgear with removable parts

The withdrawal or engagement of a circuit-breaker, switch or contactor shall be impossible unless it is in the open position.

The operation of a circuit-breaker, switch or contactor shall be impossible unless it is in the service, disconnected, removed, test or earthing position.

It shall be impossible to close the circuit-breaker, switch or contactor in the service position unless it is connected to the auxiliary circuit, unless it is designed to open automatically without the use of an auxiliary circuit.

b) Metal-enclosed switchgear and controlgear without removable parts and provided with disconnectors

Interlocks shall be provided to prevent operation of disconnectors under conditions other than those they are intended for (see I E C 129). The operation of a disconnector shall be impossible unless the associated circuit-breaker, switch or contactor is in the open position.

NOTE — This rule may be disregarded if it is possible to have a busbar transfer in a double busbar system without current interruption.

The operation of the circuit-breaker, switch or contactor shall be impossible unless the associated disconnector is in the closed, open or earthing position (if provided).

The provision of additional or alternative interlocks shall be subject to agreement between manufacturer and user. The manufacturer shall give all necessary information on the character and function of interlocks.

It is recommended that earthing switches having a short-circuit making capacity less than the rated peak withstand current of the circuit should be interlocked with the associated disconnectors.

Apparatus installed in main circuits, the incorrect operation of which can cause damage or which are used for assuring isolating distances during maintenance work, shall be provided with locking facilities (for example provision for padlocks).

NOTE — Whenever practical, preference should be given to mechanical interlocks.

5.107 *Provisions for dielectric tests on cables*

When it is not practical to disconnect the cable for the dielectric tests from the metal-enclosed switchgear and controlgear, those parts which remain connected to the cable shall be capable of withstanding the cable test voltages specified in the relevant cable standards.

NOTE — Attention is drawn to the fact that practically no safety margin is left in some cases between the rated power-frequency test voltage for the isolating distance and the resulting voltage stress across the isolating distance due to the application of the d.c. cable test voltage while the other side of the isolating distance of metal-enclosed switchgear and controlgear is still live.

SECTION SIX — RULES FOR TYPE TESTS

6. Type tests

Refer to Clause 6 of I E C 694 with the addition of the following modification:

Components contained in metal-enclosed switchgear and controlgear which are subject to individual specifications not covered by the scope of I E C 694 shall comply with and be tested in accordance with those specifications, taking into account the conditions given in the following sub-clauses.

The type tests are made on a representative functional unit. Because of the variety of types, ratings and possible combinations of components, it is not practical to make type tests with all the arrangements of metal-enclosed switchgear and controlgear. The performance of any particular arrangement may be substantiated by test data of comparable arrangements.

NOTE — A representative functional unit may take the form of one extensible unit. However, it may be necessary to bolt two or three of such units together.

Other tests than those indicated hereafter can be carried out on metal-enclosed switchgear and controlgear including organic insulating materials. These tests are subject to agreement between manufacturer and user.

The type tests and verifications comprise:

Normal type tests

a) Tests to verify the insulation level of the equipment including tests at power-frequency test voltages on auxiliary circuits:	Sub-clause 6.1
b) Tests to prove the temperature rise of any part of the equipment and measurement of the resistance of the main circuit:	Sub-clauses 6.3 and 6.4
c) Tests to prove the capability of the main and earthing circuits to be subjected to the rated peak and the rated short-time withstand currents:	Sub-clause 6.5
d) Test to prove the making and breaking capacity of the included switching devices:	Sub-clause 6.101
e) Tests to prove the satisfactory operation of the included switching devices and removable parts:	Sub-clause 6.102

f) Tests to verify the protection of persons against approach to live parts and contact with moving parts: Sub-clause 6.103

g) Tests to verify the protection of persons against dangerous electrical effects: Sub-clause 6.106

h) Tests to verify the strength of gas-filled compartments: Sub-clause 6.104

i) Gas tightness tests of gas-filled compartments: Sub-clause 6.105

Special type tests (subject to agreement between manufacturer and user)

j) Tests to verify the protection of the equipment against external effects due to weather: Sub-clause 6.107

k) Tests to verify the protection of the equipment against mechanical damage: Sub-clause 5.101.3

l) Tests to assess the effects of arcing due to an internal fault: Sub-clause 6.108

m) Tests to detect certain defects in the solid insulation of the equipment by the measurement of partial discharges: Sub-clause 6.1.9

NOTE — Some of the type tests may impair the suitability of the tested parts for subsequent use in service.

6.1 *Dielectric tests*

6.1.1 *Ambient air conditions during tests*

Refer to Sub-clause 6.1.1 of I E C 694 with the following limitation:

Where the insulation of metal-enclosed switchgear and controlgear comprises atmospheric air, voltage tests shall be made in conditions as near as possible to the standard reference atmosphere. The application of correction factors for air density and humidity are allowed for the determination of the test voltage subject to agreement between manufacturer and user.

6.1.2 *Wet test procedure*

I E C 694 is not applicable as no dielectric tests under wet conditions are necessary for metal-enclosed switchgear and controlgear.

6.1.3 *Conditions of switchgear and controlgear during dielectric tests*

Refer to Sub-clause 6.1.3 of I E C 694 for those tests which are applicable.

6.1.4 *Application of test voltages and test conditions*

I E C 694 is not applicable. Because of the great variety of designs, it is not feasible to give specific indications of the tests to be performed on the main circuit, but, in principle, they shall cover the following tests:

a) To earth and between phases

The test voltages specified in Sub-clause 6.1.5 shall be applied connecting each phase conductor of the main circuit in turn to the high-voltage terminal of the test supply. All other conductors of the main circuit and the auxiliary circuits are to be connected to the earthing conductor or the frame and to the earth terminal of the test supply.

Gas-filled compartments with sealed pressure systems (see Sub-clause 3.107) may be tested at the rated filling pressure when it is lower than 0,5 bar (gauge).

If the phase conductors are segregated, only tests to earth and no tests between phases apply.

The dielectric tests shall be made with all switching devices closed and all removable parts in their service position. Attention shall be given to the possibility that switching devices in their open position or removable parts in the disconnected, removed, test or earthing position may result in less favourable field conditions. Under such conditions the tests shall be repeated.

NOTE — The removable parts are not to be subjected to these voltage tests whilst they are in the disconnected, test or removed position.

For these dielectric tests, current transformers, any direct overcurrent release or overcurrent indicator and the cable terminal boxes (placed, if necessary, in several configurations if in doubt about the most unfavourable situation) should be installed as in normal service.

In order to check compliance with the requirements of Sub-clause 5.102.5 and Item *a)* of Sub-clause 5.103.1 inspection windows, partitions and shutters of insulating material shall be covered on the side accessible during operation or maintenance, in the most unfavourable situation for the test, with a circular or square metal foil having an area as large as possible but not exceeding 100 cm^2; which shall be connected to earth. In case of doubt about the most unfavourable situation, the tests shall be repeated with different situations. For convenience of testing, subject to agreement between manufacturer and user, more than one metal foil may be applied simultaneously or larger parts of the insulating material may be covered.

b) Across the isolating distance

Each isolating distance of the main circuit shall be tested using the test voltages specified in Sub-clause 6.1.5. The isolating distance may be the distance between the two parts of the main circuit intended to be connected by a withdrawn or removed switching device.

If, in the disconnected position, an earthed metallic shutter is interposed between the disengaged contacts to assure a segregation, the gap between the earthed metallic shutter and the live parts shall withstand only the test voltages required to earth.

If, in the disconnected position, there is no earthed metallic shutter or partition between the fixed part and the withdrawable part, the test voltages specified across the isolating distance shall be applied:

— between the fixed and moving contacts intended to engage, if conductive parts of the main circuit of the withdrawable part can inadvertently be touched;

— between the fixed contacts on one side and the fixed contacts on the other side, with the switching device of the withdrawable part in the closed position, if they cannot inadvertently be touched.

c) Complementary tests

In order to check compliance with the requirement of Item *c)* of Sub-clause 5.103.1, the insulation between the live parts of the main circuit and the inside of insulating partitions or shutters shall be subjected to a power-frequency test voltage of 150% of the rated voltage for 1 min after covering the inner surface of the partition or shutter facing the live parts by an earthed metal foil.

6.1.5 *Test voltages*

Refer to Sub-clause 4.2.1 of I E C 694.

The test voltages to earth and between phases shall be selected from table 1, columns (2) or (4) and (6), or the table of annex EE, columns (2) and (4). The test voltages across the isolating distance shall be selected from table 1, columns (3) or (5) and (7), or the table of annex EE, columns (3) and (5).

6.1.6 *Lightning and switching impulse voltage tests*

Refer to Sub-clause 6.1.6 of I E C 694 with the addition of the following supplement:

Metal-enclosed switchgear and controlgear shall be subjected to lightning impulse voltage tests only. Normally, the fifteen-impulse withstand test shall be applied. However, in the case where non-self-restoring insulation predominates, the conventional impulse withstand test may be applied subject to agreement between manufacturer and user, so as to avoid possible damage to the solid insulation.

Voltage transformers, power transformers or fuses may be replaced by replicas reproducing the field configuration of the high-voltage connections.

Overvoltage protective devices shall be disconnected or removed. Current transformer secondaries shall be short-circuited and earthed. Current transformers with a low ratio may have their primaries short-circuited too.

During the lightning impulse voltage tests, the earthed terminal of the impulse generator shall be connected to the enclosure of the metal-enclosed switchgear and controlgear, except that during the tests in accordance with Item *b)* of Sub-clause 6.1.4 the enclosure shall, if necessary, be insulated from earth in order that the voltage appearing between any of the live parts and the enclosure will not exceed the test voltage specified in Item *a)* of Sub-clause 6.1.4.

6.1.7 *Power-frequency voltage tests on the main circuit*

Refer to Sub-clause 6.1.7 of I E C 694 with the addition of the following supplement:

The main circuits of metal-enclosed switchgear and controlgear shall be subjected to power-frequency voltage tests in dry conditions only.

Voltage transformers, power transformers or fuses may be replaced by replicas reproducing the field configuration of the high-voltage connections. Overvoltage protective devices may be disconnected or removed.

During the power-frequency voltage tests, one terminal of the test transformer shall be connected to earth and to the enclosure of the metal-enclosed switchgear and controlgear, except that during the tests in accordance with Item *b)* of Sub-clause 6.1.4 the mid-point or another intermediate point of the voltage source should be connected to earth and to the enclosure in order that the voltage appearing between any of the live parts and the enclosure will not exceed the test voltage specified in Item *a)* of Sub-clause 6.1.4.

If this is not practicable, one terminal of the test transformer may, with the agreement of the manufacturer, be connected to earth and the enclosure shall, if necessary, be insulated from earth.

6.1.8 *Artificial pollution tests*

I E C 694 is not applicable.

6.1.9 *Partial discharge tests*

Refer to Sub-clause 6.1.9 of I E C 694 and to annex FF with the addition of the following supplement:

The measurement of partial discharges should be made as a type test to show, in correlation with the other dielectric tests, if and where there are weak points with respect to the dielectric stresses resulting from the design of the equipment.

If the test is made, it shall be carried out before and after the lightning impulse and power-frequency voltage tests, at the minimum functional pressure or at the rated filling pressure if applicable.

6.1.10 *Dielectric tests on auxiliary and control circuits*

Refer to Sub-clause 6.1.10 of I E C 694 which is applicable to all low voltage auxiliary circuits.

Current transformer secondaries shall be short-circuited and disconnected from earth. Voltage transformer secondaries shall be disconnected.

6.2 *Radio interference voltage (RIV) tests*

I E C 694 is not applicable.

6.3 *Temperature-rise tests*

Refer to Sub-clause 6.3 of I E C 694 with the addition of the following supplement:

Where the design provides alternative components or arrangements, the test shall be performed with those components or arrangements for which the most severe conditions are obtained. The representative functional unit shall be mounted approximately as in normal service, including all normal enclosures, partitions, shutters, etc. and the covers and doors closed.

The tests shall be made normally with the rated number of phases and the rated normal current flowing from one end of the length of busbars to the terminals provided for the connection of cables.

When testing individual functional units, the neighbouring units should carry the currents which produce the power loss corresponding to the rated conditions. It is admissible to simulate equivalent conditions by means of heaters or heat insulation, if the test cannot be performed under actual conditions.

The temperature rises of the different components shall be referred to the ambient air temperature outside the enclosure and shall not exceed the values specified for them in the relevant standards. If the ambient air temperature is not constant, the surface temperature of an identical enclosure may be taken under the same ambient conditions.

6.4 *Measurement of the resistance of the main circuit*

Refer to Sub-clause 6.4 of I E C 694 with the addition of the following paragraph:

The measured resistance across the complete main circuit of an assembly of metal-enclosed switchgear and controlgear is indicative of the proper condition of the current path. However, no tolerance can be specified.

6.5 *Short-time and peak withstand current tests*

Refer to Sub-clause 6.5 of I E C 694.

6.5.101 *Test on main circuits*

Main circuits of metal-enclosed switchgear and controlgear shall be tested to verify their capability to withstand the rated short-time and peak withstand current under the intended conditions of installation and use, i.e. they shall be tested as installed in the metal-enclosed switchgear and controlgear with all associated components influencing the performance or modifying the short-circuit current.

For these tests, short connections to voltage transformers are not considered as parts of the main circuit.

The short-circuit current tests should preferably be carried out three-phase. The r.m.s. value of the short-circuit current during the test shall be obtained by applying the rated short-time withstand current to the main circuit of metal-enclosed switchgear and controlgear.

Short and direct connections between circuits having a high short-circuit current and current limiting devices may be tested with a reduced short-circuit current.

With the exception of protective devices which limit the value and the duration of the short-circuit current, it is necessary to ensure that no protective device operates. Current transformers and tripping devices which may be present shall be installled as in normal service, but with the release made inoperative.

Current limiting fuses, if any, shall be provided with fuse-links having the maximum rated current specified.

After the test, no deformation or damage to components or conductors within the enclosure which may impair good operation of the main circuits shall have been sustained.

6.5.102 *Tests on earthing circuits*

Earthing conductors, earthing connections and earthing devices of metal-enclosed switchgear and controlgear shall be tested to verify their capability to withstand the rated short-time and peak withstand current under the neutral earthing condition of the system, i.e. they shall be tested as installed in the metal-enclosed switchgear and controlgear with all associated components influencing the performance or modifying the short-circuit current.

The short-circuit current tests with earthing devices should preferably be carried out three-phase.

When there are removable parts, the earthing connection between the fixed part and the removable part shall be tested under earth fault conditions. The earth fault current shall flow between the earthing conductor and the frame of the removable part. The earthing connection between two removable parts, if any, shall also be tested.

After the test some deformation and degradation of the earthing conductor, earthing connections or earthing devices is permissible, but the continuity of the circuit shall be preserved.

6.101 *Verification of making and breaking capacities*

Switching devices forming part of the main circuit of metal-enclosed switchgear and controlgear shall be tested to verify their rated making and breaking capacities according to the relevant standards and under the proper conditions of installation and use, i.e. they shall be tested as normally installed in the metal-enclosed switchgear and controlgear with all associated components the arrangement of which may influence the performance, such as connections, supports, provisions for venting etc.

NOTE — In determining which associated components are likely to influence the performance, special attention should be given to mechanical forces due to the short circuit, the venting of arc products, the possibility of disruptive discharges, etc. It is recognized that, in some cases, such influences may be quite negligible.

6.102 *Mechanical operation tests*

6.102.1 *Switching devices and removable parts*

Switching devices shall be operated 50 times and removable parts inserted 25 times and withdrawn 25 times to verify satisfactory operation of the equipment.

6.102.2 *Interlocks*

The interlocks shall be set in the position intended to prevent the operation of the switching devices and the insertion or withdrawal of removable parts. Fifty attempts shall be made to operate the switching devices and 25 attempts shall be made to insert and 25 attempts to withdraw the removable parts. During these tests only normal operating forces shall be employed and no adjustment shall be made to the switching devices, removable parts or interlocks.

The interlocks are considered to be satisfactory, if

a) the switching devices cannot be operated;

b) the insertion and withdrawal of the removable parts are prevented;

c) the switching devices, removable parts and the interlocks are in proper working order and the effort to operate them is practically the same before and after the tests.

6.103 *Verification of the degree of protection*

The tests shall be performed in accordance with the requirements specified in Clause 7 of I E C 529 for the appropriate first characteristic numeral.

It shall be verified that the test instruments according to table 2 cannot either

— cause a lowering of the dielectric strength of the main circuit below the rated insulation level, or

— touch moving parts inside the enclosure, or

— in the case of IP2X pass through openings in the enclosure or partition.

The test shall, however, be made only in the case of doubt as to whether the requirements are met.

TABLE 2

Degree of protection	Test instruments
IP2X	Standard metallic test finger (figure 1) and rigid sphere of $12{,}0^{+0{,}05}_{0}$ mm diameter
IP3X	Straight rigid steel wire of $2{,}5^{+0}_{-0{,}05}$ mm diameter
IP4X	Straight rigid steel wire of $1{,}0^{+0}_{-0{,}05}$ mm diameter

6.104 *Pressure withstand test for gas-filled compartments*

Each design of gas-filled compartments shall withstand a pressure of three times the design pressure for 1 min. After the test this compartment may be distorted. This test is carried out without pressure relief devices if any.

The replacement of pressure relief devices for pressure withstand tests shall not have any effect on the mechanical strength of the enclosure.

6.105 *Gas tightness tests of gas-filled compartments*

Refer to annnex GG.

The measurement of gas tightness shall be performed with each type of gas-filled compartments as a type test to show that the leakage rate will not be changed by influences caused by the thermal and mechanical type tests.

6.106 *Measurement of leakage currents*

When metal-enclosed switchgear and controlgear contains insulating partitions or shutters, the following tests shall be made in order to check compliance with the requirement of item *d)* of Sub-clause 5.103.1.

The main circuit shall, at the discretion of the manufacturer, be connected either to a three-phase supply of power-frequency voltage equal to the rated voltage of the metal-enclosed switchgear and controlgear, with one phase connected to earth, or to a single-phase supply of a voltage equal to the rated voltage, the live parts of the main circuit being connected together. For three-phase tests, three measurements shall be made with the different phases of the supply successively connected to earth. In the case of single-phase tests, only one measurement is necessary.

A metal foil shall be placed in the most unfavourable situation for the test on the accessible surface of the insulation providing the protection against contact with live parts. In case of doubt about the most unfavourable situation, the test shall be repeated with different situations.

The metal foil shall be approximately circular or square, having an area as large as possible but not exceeding 100 cm^2. The enclosure and the frame of the metal-enclosed switchgear and controlgear shall be earthed. The leakage current flowing through the metal foil to earth shall be measured with the insulation dry and clean.

If the value of the leakage current measured is more than 0,5 mA, the insulating surface does not provide the protection required in this standard.

If, as indicated in Item *d)* of Sub-clause 5.103.1, the continuous path over insulating surfaces is broken by small gaps of gas or liquid, such gaps shall be shorted out electrically. If these gaps are incorporated to avoid the passage of the leakage current from live parts to accessible parts of insulating partitions and shutters, the gaps shall withstand the test voltages specified in Sub-clause 4.2.1 of I E C 694 for voltage tests to earth and between poles.

It is not necessary to measure leakage currents, if earthed metal parts are arranged in an appropriate manner to ensure that leakage currents cannot reach the accessible parts of the insulating partitions and shutters.

6.107 *Weatherproofing test*

When agreed between manufacturer and user, a weatherproofing test shall be made on metal-enclosed switchgear and controlgear intended for outdoor use. A recommended method is given in annex CC. This test also takes into account the effects of wind-driven snow.

6.108 *Arcing due to internal fault*

This test is subject to an agreement between manufacturer and user. If such a test is agreed, the procedure shall be in accordance with that described in annex AA.

The test procedure represents the effects of an arc occurring entirely in air or in another insulating gas within the enclosure when doors and covers are closed but does not cover all cases, particularly those faults occurring within the components or in solid or liquid insulation.

SECTION SEVEN — RULES FOR ROUTINE TESTS

7. Routine tests

The routine tests shall be made with each transport unit and, whenever practicable, at the manufacturer's works to ensure that the product is in accordance with the equipment on which the type test has been carried out.

Refer to Clause 7 of I E C 694 with the addition of the following routine tests:

— mechanical operation tests:	Sub-clause 7.102
— tests of auxiliary electrical, pneumatic and hydraulic devices:	Sub-clause 7.105
— verification of correct wiring:	Sub-clause 7.106
— pressure tests of gas-filled compartments (if applicable):	Sub-clause 7.103
— gas tightness tests of gas-filled compartments (if applicable):	Sub-clause 7.104
— partial discharge measurement (subject to agreement between manufacturer and user):	Sub-clause 7.101
— tests after erection on site:	Sub-clause 7.107

NOTE — It may be nessessary to verify the interchangeability of components of the same rating and construction (see Clause 5).

7.1 *Power-frequency voltage tests on the main circuit*

Refer to Sub-clause 7.1 of I E C 694 with the addition of the following supplement:

The metal-enclosed switchgear and controlgear is an assembly of components which individually have been subjected to appropriate routine tests. The tests according to this sub-clause serve in principle, to prove the interconnections.

The power-frequency voltage test shall be performed according to the requirements in Sub-clause 6.1.7. The test voltage specified in table 1, column (6), of I E C 694 or the table of annex EE, column (4), shall be applied connecting each phase conductor of the main circuit in turn to the high-voltage terminal of the test supply, with the other phase conductors connected to earth and the continuity of the main circuit assured (e.g. by closing the switching devices or otherwise).

NOTE — On special request by the user and in addition to these routine tests at the manufacturer's premises, dielectric tests with a reduced test voltage may be performed after erection on site (see annex DD).

For gas-filled compartments the tests shall be performed at the rated filling pressure of the insulating gas (see Sub-clause 4.101).

7.2 *Dielectric tests on auxiliary and control circuits*

Refer to Sub-clause 7.2 of I E C 694.

7.3 *Measurement of the resistance of the main circuit*

I E C 694 is not applicable. Subject to agreement between manufacturer and user the d.c. voltage drop or resistance of each phase of the main circuit shall be measured under conditions as nearly as possible similar to those under which the corresponding type test was carried out.

7.101 *Partial discharge measurement*

This test is subject to agreement between manufacturer and user.

The measurement of partial discharges may be appropriate as a routine test to detect possible material and manufacturing defects especially for gas-filled compartments.

If such a test is agreed, the procedure shall be as described in annex FF.

7.102 *Mechanical operation tests*

Operation tests are made to ensure that the switching devices and removable parts comply with the prescribed operating conditions and that the mechanical interlocks work properly.

During these tests which are performed without voltage on or current in the main circuits, it shall be verified, in particular, that the switching devices open and close correctly within the specified limits of the supply voltage and pressure of their operating devices.

Each switching device and each removable part shall be tested as specified in Sub-clause 6.102, but substituting five operations or five attempts in each direction.

7.103 *Pressure tests of gas-filled compartments*

Pressure tests shall be made on all gas-filled compartments after manufacture. Each compartment shall be subjected to a test at 1.3 times the design pressure for one minute.

This does not apply for sealed compartments with a rated filling pressure of 0,5 bar (gauge) and below.

After this test the compartments shall show no signs of distress or any distortion likely to affect the operation of the switchgear.

7.104 *Gas tightness tests of gas-filled compartments*

Refer to annex GG.

7.105 *Tests of auxiliary electrical, pneumatic and hydraulic devices*

The electrical, pneumatic and other interlocks together with control devices having a predetermined sequence of operation shall be tested five times in succession in the intended conditions of use and operation and with the most unfavourable limit values of auxiliary supply. During the test no adjustment shall be made.

The tests are considered to be satisfactory if the auxiliary devices have operated properly, if they are in good operating condition after the tests and if the effort to operate them is practically the same before and after the tests.

7.106 *Verification of correct wiring*

It shall be verified that the wiring conforms with the diagram.

7.107 *Tests after erection on site*

After erection, metal-enclosed switchgear and controlgear shall be tested to check correct operation.

For parts which are assembled on site and for gas-filled compartments which are filled on site it is recommended to carry out the following tests:

a) Voltage test of the main circuit:	annex DD
b) Gas tightness tests of gas-filled compartments (if applicable):	Sub-clause 7.104
c) Measurement of gas condition after filling on site:	Sub-clause 7.108

7.108 *Measurement of gas condition after filling on site*

The condition of the gas in gas-filled compartments shall be determined and shall meet the manufacturer's specification.

If the gas is sulphur hexafluoride, reference should be made to I E C 480.

SECTION EIGHT — GENERAL INFORMATION

8. Guide to the selection of switching devices for service

For a given duty in service, metal-enclosed switchgear and controlgear is selected by considering the individual rated values of their components required by normal load conditions and in the case of fault conditions.

It is desirable that the rated values be chosen as suggested in this standard regarding the characteristics of the system as well as its anticipated future development. The complete list of ratings is given in Clause 4.

Other parameters such as local atmospheric and climatic conditions and the use at altitudes exceeding 1 000 m are also to be considered.

The duty imposed by fault conditions should be determined by calculating the fault currents at the place where the metal-enclosed switchgear and controlgear is to be located in the system.

9. Information to be given with enquiries, tenders and orders

9.101 *Information with enquiries and orders*

When enquiring about or ordering an installation of metal-enclosed switchgear and controlgear the following information should be supplied by the enquirer:

1. Particulars of the system:

   Nominal and highest voltage, frequency, type of system neutral earthing.

2. Service conditions:

   Minimum and maximum ambient air temperature; any condition deviating from the normal service conditions or affecting the satisfactory operation of the equipment, as, for example, the unusual exposure to vapour, moisture, fumes, explosive gases, excessive dust or salt; the risk of earth tremors or other vibrations due to causes external to the equipment to be delivered.

3. Particulars of the installation and its components:
   a) indoor or outdoor installation;
   b) number of phases;
   c) number of busbars;
   d) rated voltage;
   e) rated insulation level;
   f) rated normal currents of busbars and feeder circuits;
   g) rated short-time withstand current (I_{th});
   h) rated duration of short circuit (if different from 1 s);
   i) rated peak withstand current (if different from 2,5 I_{th});
   j) rated values of components;
   k) degree of protection for the enclosure and partitions;
   l) circuit diagrams;
   m) type of metal-enclosed switchgear and controlgear (e.g. metal-clad, compartmented or cubicle).
4. Particulars of the operating devices:
   a) type of operating devices;
   b) rated supply voltage (if any);
   c) rated supply frequency (if any);
   d) rated supply pressure (if any);
   e) special interlocking requirements.

Beyond these items the enquirer should indicate every condition which might influence the tender or the order, as, for example, special mounting or erection conditions, the location of the external high-voltage connections or the rules for pressure vessels.

Information should be supplied if special type tests are required.

9.102 *Information with tenders*

The following information, if applicable, should be given by the manufacturer with descriptive matters and drawings:

1. Rated values and characteristics as enumerated in Item 3 of Sub-clause 9.101.
2. Type test certificates or reports on request.
3. Constructional features, for example:
   a) Mass of the heaviest transport unit.
   b) Overall dimensions of the installation.
   c) Arrangement of the external connections.
   d) Facilities for transport and mounting.
   e) Mounting provisions.
   f) Instructions for operation and maintenance.
   g) Type of gas-pressure system.
   h) Rated filling pressure and minimum functional pressure.
   i) Volume of gas for the different compartments.
   j) Specification of gas condition.

4. Particulars of the operating devices:
   a) Types and rated values as enumerated in Item 4 of Sub-clause 9.101.
   b) Current or power for operation.
   c) Operating times.
   d) Quantity of free gas for operation.
5. List of recommended spare parts which should be procured by the user.

10. Rules for transport, storage, erection and maintenance

Refer to Clause 10 of IEC 694.

10.1 *Conditions during transport, storage and erection*

Refer to Sub-clause 10.1 of IEC 694.

10.2 *Erection (mounting)*

Refer to Sub-clause 10.2 of IEC 694.

10.3 *Maintenance*

Refer to Sub-clause 10.3 of IEC 694 with the addition of the following paragraph:

If, for certain maintenance purposes, temporary inserted insulating screens are required, these screens shall be supplied by the manufacturer who shall also give advice about their use. Such insulating screens shall meet the requirements of Sub-clause 5.103.1. They and their supports shall have sufficient mechanical strength to avoid incidental touching of live parts.

NOTE — Insulating screens provided for mechanical protection only are not subject to this standard.

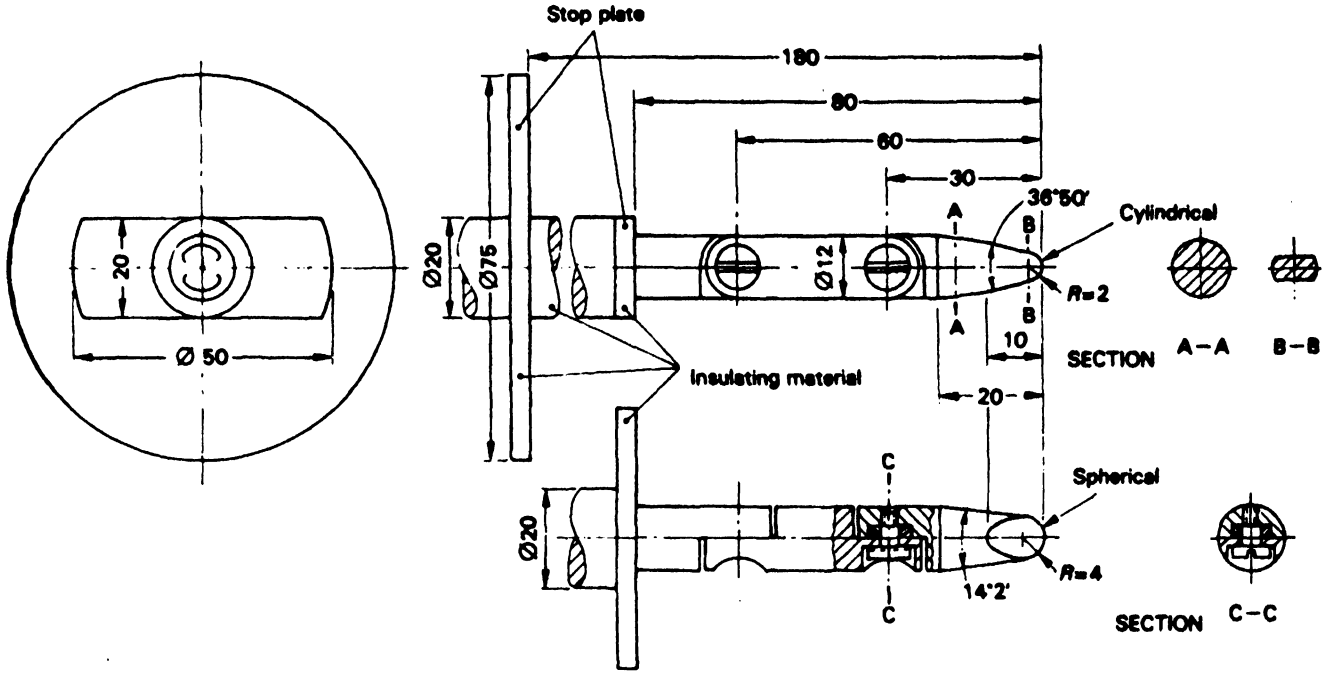

Both joints of this finger may be bent through an angle of 90°, but in one and the same direction only.

Dimensions in millimetres
Tolerances:
on angles: ± 5'
on linear dimensions:
less than 25 mm: $^{+0}_{-0.05}$
over 25 mm: ± 0.2

FIGURE 1 — Standard test finger

Annex AA
(normative)

Internal fault

Table AA.1 — Locations, causes and examples of measures decreasing the probability of internal faults or reducing the risk

Locations where internal faults are more likely to occur (1)	Possibles causes of internal faults (2)	Examples of measures (3)
Cable boxes	Inadequate design	Selection of adequate dimensions.
	Faulty installation	Avoidance of crossed cable connections. Checking of workmanship on site.
	Failure of solid or liquid insulation (defective or missing)	Checking of workmanship and/or dielectric test on site. Regular checking of liquid levels.
Disconnectors Switches Earthing switches	Mal-operation	Interlocks (see Sub-clause 5.105). Delayed reopening. Independent manual operation. Making capacity for switches and earthing switches. Instructions to personnel.
Bolted connections and contacts	Corrosion	Use of corrosion inhibiting coating and/or greases. Encapsulation, where possible.
	Faulty assembly	Checking of workmanship by suitable means.
Instrument transformers	Ferroresonance	Avoidance of these electrical influences by suitable design of the circuit.
Circuit-breakers	Insufficient maintenance	Regular programmed maintenance. Instructions to personnel.
All locations	Error by personnel	Limitation of access by compartmentation. Insulation embedded live parts. Instructions to personnel.
	Ageing under electric stresses	Partial discharge routine tests.
	Pollution, moisture, ingress of dust, vermin, etc.	Measures to ensure that the specified service conditions are achieved (see Clause 2). – Use of gas-filled compartments.
	Overvoltages	Lightning protection. Adequate insulation co-ordination. Dielectric tests on site.

TABLE AA.2 — Examples of measures limiting the consequences of internal faults

— Rapid fault clearance times initiated by detectors sensitive to light, pressure or heat or by a differential busbar protection — Application of suitable fuses in combination with switching devices to limit the let-through current and fault duration — Remote control — Pressure relief devices

METHOD FOR TESTING THE METAL-ENCLOSED SWITCHGEAR AND CONTROLGEAR UNDER CONDITIONS OF ARCING DUE TO AN INTERNAL FAULT

AA.1 Introduction

The occurrence of arcs inside metal-enclosed switchgear and controlgear is coupled with various physical phenomena.

For example, the arc energy resulting from an arc developed in air at atmospheric pressure or in another insulating gas within the enclosure will cause an internal overpressure and local overheating which will result in mechanical and thermal stressing of the equipment. Moreover, the materials involved may produce hot decomposition products, either gaseous or vaporous, which may be discharged to the outside of the enclosure.

This standard makes allowance for internal overpressure acting on covers, doors, inspection windows, etc., and also takes into consideration the thermal effects of the arc or its roots on the enclosure and of ejected hot gases and glowing particles, but not damage to partitions and shutters. Consequently, it does not cover all effects which may constitute a risk, such as toxic gases. Moreover, the test procedure only simulates situations when doors and covers are closed and correctly secured.

AA.2 Types of accessibility

A distinction is made between the two types of accessibility corresponding to the different test conditions given in Sub-clauses AA.5.3.2 and AA.5.3.3. The enclosure may have different types of accessibility on its various sides.

Type A: Metal-enclosed switchgear and controlgear with accessibility restricted to authorized personnel only.

Type B: Metal-enclosed switchgear and controlgear with unrestricted accessibility, including that of the general public.

AA.3 Test arrangements

The choice of the functional units, their number, their equipment and their position in the room, as well as the place of initiation of the arc are to be decided upon in consultation. In each case, the following points shall be observed:

— the test should be carried out on a functional unit not previously subjected to arcing;

— the mounting conditions should be as close as possible to those of normal service. The room should be represented at least by the floor, the ceiling, two perpendicular walls and the cable ducts;

— the functional unit should be fully equipped. Mock-ups of internal components are permitted provided they have the same volume and external material as the original items;

— the test unit shall be earthed at the point provided;

— the arc shall not be initiated in such a way that it can be considered unrealistic in service conditions.

AA.4 Current and voltage applied

AA.4.1 *General*

The tests on metal-enclosed switchgear and controlgear should be carried out three-phase. The short-circuit current applied during the test is to be stated by the manufacturer. It may be equal to or lower than the rated short-time withstand current.

AA.4.2 *Voltage*

The applied voltage of the test circuit should be equal to the rated voltage of the metal-enclosed switchgear and controlgear. A lower voltage may be chosen if the following conditions are met:

a) the current remains practically sinusoidal;

b) the arc is not extinguished prematurely.

AA.4.3 *Current*

AA.4.3.1 *A.C. component*

The short-circuit current for which the metal-enclosed switchgear and controlgear is specified with respect to arcing should be set within a $+5\%$ -0% tolerance. This tolerance applies to the prospective current only if the applied voltage is equal to the rated voltage. The current should remain constant.

NOTE — If the test plant does not permit this, the test should be extended until the integral of the a.c. component of the current equals the value specified within a tolerance of $+10\%$ -0%. In this case, the current should be equal to the specified value at least during the first three half-cycles and should not be less than 50% of the specified value at the end of the test.

AA.4.3.2 *D.C. component*

The instant of closing should be chosen so that the prospective value of the peak current (with a tolerance of $+5\%$ -0%) flowing in one of the outer phases is 2,5 times the r.m.s. value of the a.c. component defined in Sub-clause AA.4.3.1, and so that a major loop also occurs in the other outer phase. If the voltage is lower than the rated voltage, the peak value of the short-circuit current for the metal-enclosed switchgear and controlgear under test should not drop below 90% of the prospective peak value.

AA.4.4 *Frequency*

At a rated frequency of 50 Hz or 60 Hz, the frequency at the beginning of the test should be between 48 Hz and 62 Hz. At other frequencies it should not deviate from the rated value by more than $\pm 10\%$.

AA.4.5 *Duration of the test*

The arc duration is chosen in relation to the probable duration of the arc determined by the protection facilities and should not normally exceed 1 s.

For testing metal-enclosed switchgear and controlgear provided with pressure relief devices, merely for proving its resistance to pressure, an arc duration of 0,1 s is generally sufficient. This does not apply for gas-filled compartments.

NOTE — It is in general not possible to calculate the permissible arc duration for a current which differs from that used in the test. The maximum pressure during the test will generally not decrease with a shorter arcing time and there is no universal rule according to which the permissible arc duration may be increased with a lower test current.

AA.5 Test procedure

AA.5.1 · *Supply circuit*

The neutral is only earthed in the case of metal-enclosed switchgear and controlgear to be operated in a solidly earthed system.

Care shall be taken in order that the connections do not alter the test conditions.

Generally, inside the enclosure, the arc may be fed from two directions: the direction to be chosen is the one likely to result in the highest stress.

AA.5.2 *Arc initiation*

The arc should be initiated between the phases by means of a metal wire of about 0,5 mm diameter or, in the case of segregated phase conductors, between one phase and earth.

In functional units where the live parts are covered by solid insulating material, the arc should be initiated between two adjacent phases at joints or gaps of the insulation-embedded parts. The infeed from the supply circuit shall be three-phase to allow the fault to become three-phase.

NOTE — The arc shall not be initiated by perforating the solid insulation.

The point of initiation shall be chosen so that the effects of the resultant arc produce the highest stresses in the functional unit. In case of doubt it may be necessary to make more than one test on each functional unit.

AA.5.3 *Indicators (for observing the thermal effects of gases)*

AA.5.3.1 *General*

Indicators are pieces of black cotton cloth so arranged that their cut edges do not point toward the test unit. Care shall be taken to see that they cannot ignite each other. This is achieved by fitting them, for example, in a mounting frame of steel sheet (see figure AA.1). The indicator dimensions should be about 150 mm × 150 mm.

AA.5.3.2 *Accessibility Type A*

Indicators should be fitted vertically at the operator's side of the enclosed switchgear and controlgear and, if applicable, at sides which are readily accessible to personnel.

They should be placed, up to a height of 2 m and at a distance of 30 cm ±5% from the enclosed switchgear and controlgear, facing all points where gas is likely to be emitted (e.g. joints, inspection windows, doors). Indicators should also be arranged horizontally at a

height of 2 m above the floor and between 30 cm and 80 cm from the enclosed switchgear and controlgear, (see Figure AA.2).

Black cretonne (cotton fabric approximately 150 g/m²) should be used for the indicators.

AA.5.3.3 *Accessibility Type B*

Indicators should be fitted vertically on all accessible sides of the enclosed switchgear and controlgear.

They should be placed, up to a height of 2 m and at a distance of 10 cm ±5% from the enclosed switchgear and controlgear, facing all points where gas is likely to be emitted (e.g. joints, inspection windows, doors). Indicators should also be arranged horizontally at a height of 2 m above the floor and between 10 cm and 80 cm from the enclosed switchgear and controlgear. If the test unit is lower than 2 m, indicators should be placed horizontally on the top covers, facing all points where gas is likely to be emitted and close to the vertical indicators, which in this case, are only required up to the actual height of the equipment, (see Figure AA.2).

Black cotton-interlining lawn (approximately 40 g/m²) should be used for the indicators.

AA.6 **Assessment of the test**

The following criteria allow for the arcing effects listed in Clause AA.1. Whoever requests the test to be performed shall decide by which of these criteria the results of the test should be assessed.

It is to be observed:

Criterion No. 1

Whether correctly secured doors, covers, etc., do not open.

Criterion No. 2

Whether parts (of the metal-enclosed switchgear and controlgear), which may cause a hazard, do not fly off. This includes large parts or those with sharp edges, for example, inspection windows, pressure relief flaps, cover plates, etc., made of metal or plastic.

Criterion No. 3

Whether arcing does not cause holes to develop in the freely accessible external parts of the enclosure as a result of burning or other effects.

Criterion No. 4

Whether the indicators arranged vertically (Sub-clause AA.5.3) do not ignite. Indicators ignited as a result of paint or stickers burning are excluded from this assessment.

Criterion No. 5

Whether the indicators arranged horizontally (Sub-clause AA.5.3) do not ignite. Should they start to burn during the test, the assessment criterion may be regarded as having been met, if proof is established of the fact that the ignition was caused by glowing particles rather than hot gases. Pictures taken by high-speed cameras should be produced in evidence.

Criterion No. 6

Whether all the earthing connections are still effective.

AA.7 Test report

The following information should be given in the test report:

— Rating and description of the test unit with a drawing showing the main dimensions, details relevant to the mechanical strength, the arrangement of the pressure relief flaps and the method of fixing the metal-enclosed switchgear and controlgear to the floor and to the walls.

— Arrangement of the test connections and the point of initiation of the arc.

— Arrangement and material of indicators with respect to the type of accessibility.

— For the prospective or test current:

a) r.m.s. value of the a.c. component during the first three half-cycles;

b) highest peak value;

c) average value of the a.c. component over the actual duration of the test;

d) test duration.

— Oscillogram(s) showing currents and voltages.

— Assessment of the test results.

— Other relevant remarks.

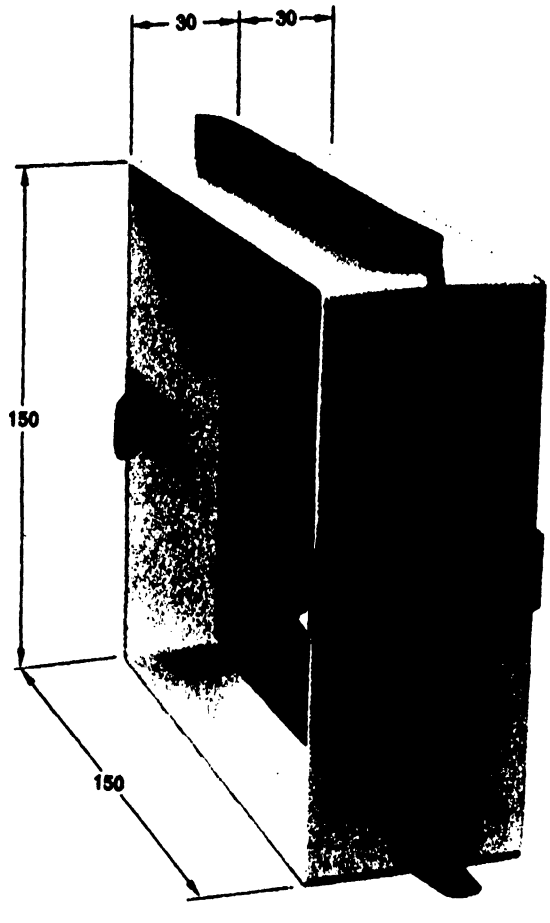

Dimensions in millimetres

FIGURE AA.1 — Mounting frame for indicators

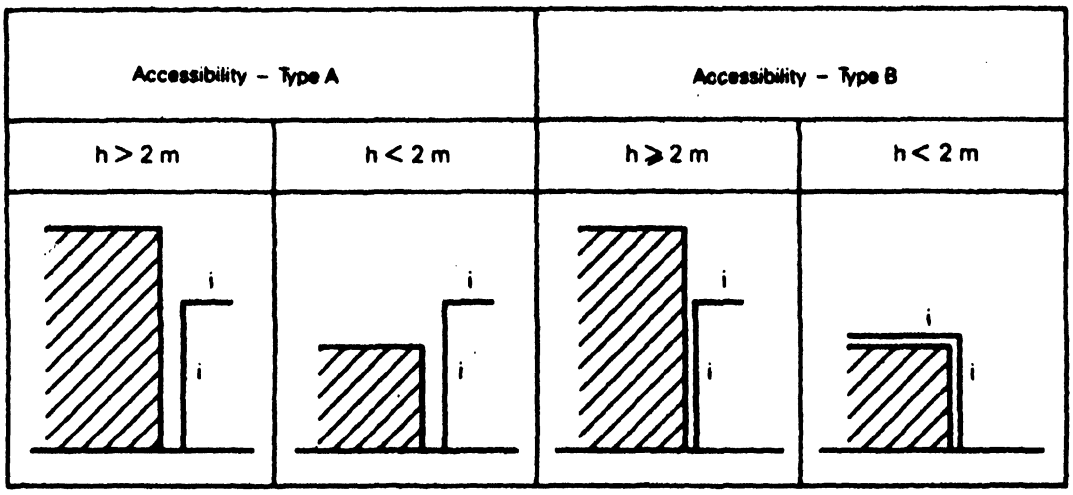

Figure AA.2 — Position of indicators (i)
Height of equipment (h)

Annex BB
(normative)

Method of calculating the cross-sectional area of bare conductors with regard to thermal stresses due to currents of short duration

The following formula can be used to calculate the cross-section of bare conductors necessary to withstand the thermal stress due to currents with a duration of the order of 0,2 s to 5 s.

$$S = \frac{I}{\alpha}\sqrt{\frac{t}{\Delta\theta}}$$

where:

S is the cross-section, expressed in square millimetres

I is the r.m.s. value of the current in amperes

α is expressed in $\frac{A}{mm^2}\left(\frac{s}{K}\right)^{1/2}$ and has the following values:

13 for copper
8,5 for aluminium
4,5 for iron
2,5 for lead

t is the time, expressed in seconds

$\Delta\theta$ is the temperature rise, expressed in Kelvins (K); for bare conductors, it is normally 180 K

If the time is more than 2 s but less than 5 s, the value for $\Delta\theta$ may be increased in the same formula to 215 K.

This takes account of the fact that the temperature rise is not strictly adiabatic.

Annex CC
(normative)

Recommended method for the weatherproofing test for outdoor metal-enclosed switchgear and controlgear

The enclosure to be tested shall be fully equipped and complete with all fittings such as roof bushings, etc., and placed in the area to be supplied with artificial precipitation. For installations comprising several functional units, a minimum of two units shall be used to test the joints between them; a roof joint shall be included.

The artificial precipitation shall be supplied by a sufficient number of nozzles to produce a uniform spray over the surface under test. The various vertical surfaces of an enclosure may be tested separately, provided that a uniform spray is simultaneously applied also to both of the following:

1) the roof surface from nozzles located at a suitable height;
2) the floor outside the enclosure for a distance of 1 m in front of the surface under test with the enclosure located at the minimum height above the floor level specified by the manufacturer.

Where the width of the equipment exceeds 3 m, the spray may be applied to 3 m wide sections in turn.

Each nozzle used for this test shall deliver a square-shaped spray pattern with uniform spray distribution and shall have a capacity of 30 l/min $\pm$ 10% at a pressure of 4,6 bar (460 kPa) $\pm$ 10% and a spray angle of 60° to 80°. The centre lines of the nozzles shall be inclined downwards so that the top of the spray is horizontal as it is directed towards the vertical and roof surfaces being tested. It is convenient to arrange the nozzles on a vertical stand-pipe and space them about 2 m apart (see the test arrangement in figure CC.1).

The pressure in the feedpipe of the nozzles shall be 4,6 bar (460 kPa) $\pm$ 10% under flow conditions. The rate at which water is applied to each surface under test shall be about 5 mm/min, and each surface so tested shall receive this rate of artificial precipitation for a duration of 5 min. The spray nozzles shall be at a distance between 2,5 m and 3 m from the nearest vertical surface under test.

NOTE — When a nozzle in accordance with figure CC.2 is used, the quantity of water is considered to be in accordance with this standard when the pressure is 4,6 bar (460 kPa) $\pm$ 10%.

After the test is completed, the enclosure shall be inspected promptly to determine whether the following requirements have been met:

1) No water shall be visible on the insulation of the main and auxiliary circuits.
2) No water shall be visible on any electrical components or mechanisms of the equipment.
3) No significant accumulation of water shall be retained by the structure or other non-insulating parts (to minimize corrosion).

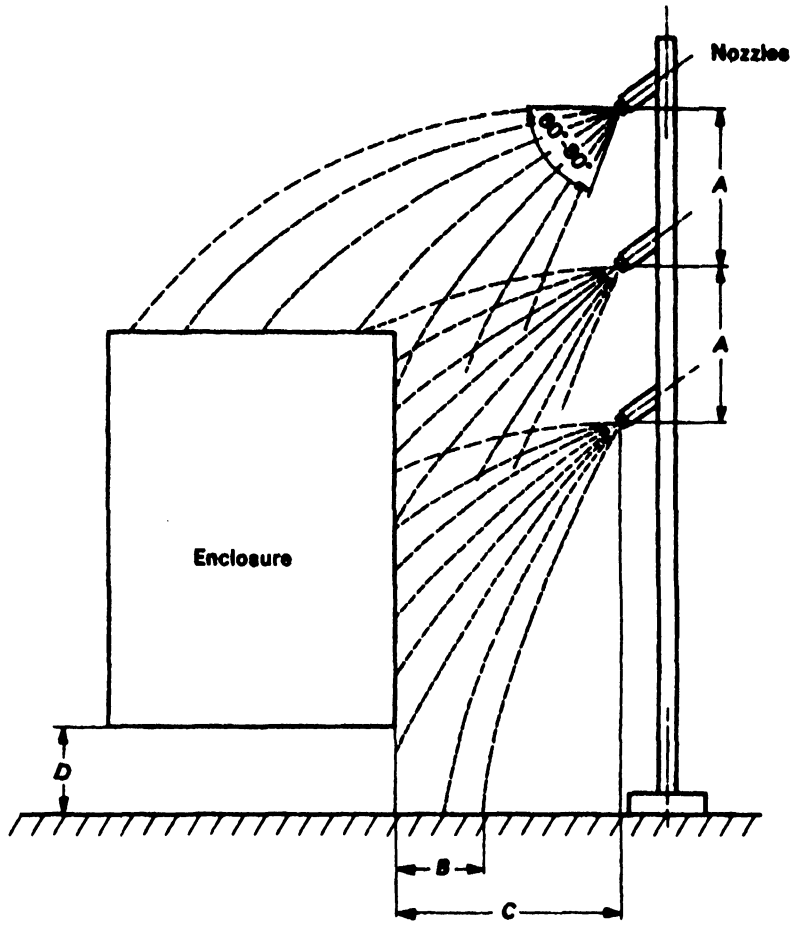

A	About 2 m
B	1 m
C	2,5 m to 3 m
D	Minimum height above floor

FIGURE CC.1 — Arrangement for weatherproofing test

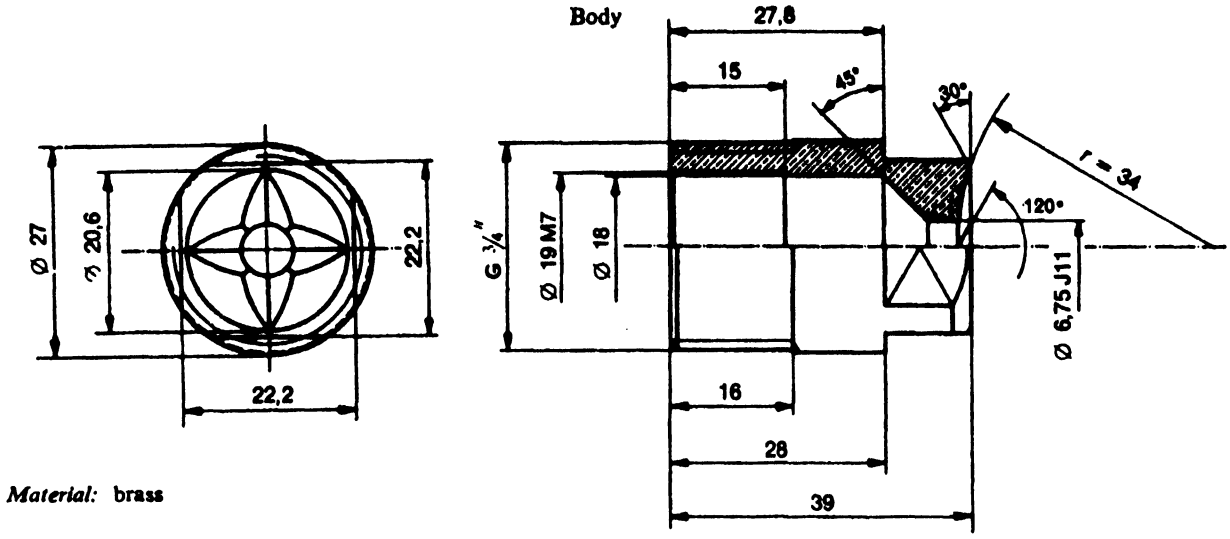

Material: brass

Internal vanes

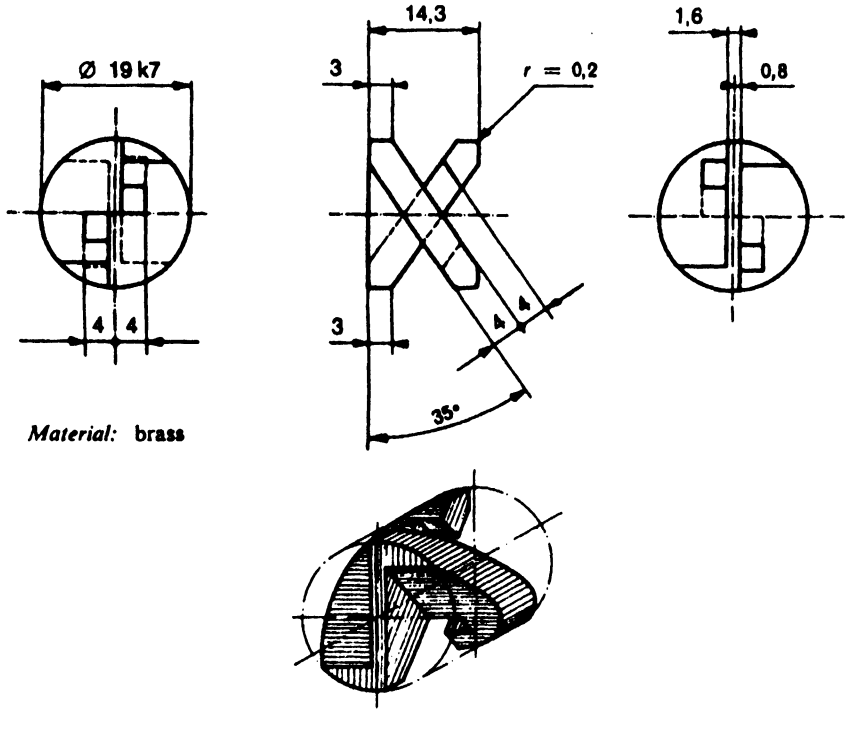

Material: brass

Assembly

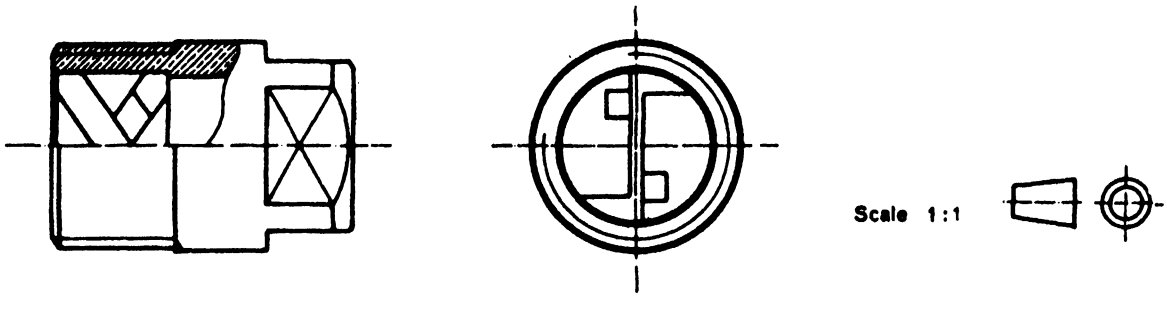

Dimensions in millimetres

FIGURE CC.2 — Nozzle for weatherproofing test

Annex DD
(normative)

Guide for voltage tests after erection on site

When agreed between manufacturer and user, power-frequeny voltage tests in dry conditions may be carried out on the main circuits of metal-enclosed weitchgear and controlgear after the erection on site in exactly the same manner as specified in Sub-clause 7.1 for the routine test at the manufacturer's premises.

The power-frequency test voltage shall be 80% of the values indicated in Sub-clause 7.1 and shall be applied to each phase conductor of the main circuit in succession with the other phase conductors earthed. For the tests, one terminal of the test transformer shall be connected to earth and to the enclosure of metal-enclosed switchgear and controlgear.

If the voltage test after erection on site replaces the routine test at the manufacturer's premises, the full power-frequency test voltage shall be applied.

D.C. voltage tests are under consideration.

Annex EE
(normative)

Rated insulation level for Series II
(based on current practice in Canada and the United States of America)

This annex gives for information the rated insulation levels for Series II, based on current practice in Canada and the United States of America, for 60 Hz only.

Rated voltage *U* (r.m.s. value) (kV)	Rated lightning impulse withstand voltage (peak value)		Rated power-frequency withstand voltage (r.m.s. value)	
	To earth and between phases (kV)	Across the isolating distance (kV)	To earth and between phases (kV)	Across the isolating distance (kV)
(1)	(2)	(3)	(4)	(5)
4,76	60	66	19	21
8,25	75	83	26	29
15	95	105	36	40
15,5	110	121	50	55
25,8	125	138	60	66
38	150	165	80	88
48,3	200	220	100	110

Annex FF
(normative)

Partial discharge measurement

FF.1 General

The measurement of partial discharges is a suitable means of detecting certain defects in the equipment under test and is a useful complement to the dielectric tests. Experience shows that partial discharges may lead in particular arrangements to a progressive degradation in the dielectric strength of the insulation, especially of solid insulation.

On the other hand, it is not yet possible to establish a reliable relationship between the results of partial discharge measurements and the life expectancy of the equipment owing to the complexity of the insulation systems used in metal-enclosed switchgear and control-gear.

FF.2 Application

The measurement of partial discharges may be appropriate for metal-enclosed switchgear and controlgear if organic insulating materials are used therein and is recommended for gas-filled compartments.

Because of the design variations a general specification for the test object cannot be given. In general, the test object should consist of assemblies or sub-assemblies with dielectric stresses which are identical to those which would occur in the complete assembly of the equipment.

NOTES

1 Test objects consisting of a complete assembly are to be preferred. In the case of integrated switchgear design, especially where various live parts and connections are embedded in solid insulation, tests are necessarily carried out on a complete assembly.

2 In the case of designs consisting of a combination of conventional components (for instance instrument transformers, bushings), which can be tested separately in accordance with their relevant standards, the purpose of this partial discharge test is to check the arrangement of the components in the assembly.

For technical and economic reasons, it is recommended to perform the partial discharge tests on the same assemblies or sub-assemblies as are used for the mandatory dielectric tests.

NOTE — This test may be carried out on assemblies or sub-assemblies. Care has to be taken that external partial discharges do not affect the measurement.

The routine test may also be carried out on components.

Criteria to be considered in deciding on the necessity for a partial discharge test are, for instance:

1) Practical experience in service including the results of such testing over a period of production.
2) The value of the electric field strength at the most highly stressed area of the solid insulation.
3) The type of insulating material used in the equipment as part of the major insulation.

FF.3 Test circuits and measuring instruments

The recommended test circuits and measuring instruments and the method of calibration are given in I E C 270.

Three-phase equipment is either tested in a single-phase test circuit or in a three-phase test circuit (see table FF.1).

a) Single-phase test circuit

Procedure A

To be used as a general method for equipment designed for use in systems with or without solidly earthed neutral.

For measuring the partial discharge quantities, each phase shall be connected to the test voltage source successively, the other two phases and all the parts earthed in service being earthed.

Procedure B

To be used only for equipment exclusively designed for use in systems with solidly earthed neutral.

For measuring the partial discharge quantities, two test arrangements shall be used.

At first, measurements shall be made at a test voltage of 1,1 U (U is the rated voltage). Each phase shall be connected to the test voltage source successively, the other two phases being earthed. It is necessary to insulate or to remove all the metallic parts normally earthed in service.

An additional measurement shall be made at a reduced test voltage of 1,1 $U/\sqrt{3}$ during which the parts being earthed in service are earthed and the three phases connected to the test voltage source are bridged.

b) Three-phase test circuit

When suitable test facilities are available, the partial discharge tests may be carried out in a three-phase arrangement.

In this case, it is recommended to use three coupling capacitors connected as shown in figure FF.1. One discharge detector can be used which is connected successively to the three measuring impedances.

For calibration of the detector on one measuring position of the three-phase arrangement, short-duration current pulses of known charge are injected between each of the phases taken in turn on the one hand, and the earth and the other two phases, on the other hand. The calibration giving the lowest deflection is used for the determination of the discharge quantity.

FF.4 Test procedure

The applied power-frequency voltage is raised to at least 1,3 U or 1,3 $U/\sqrt{3}$ in accordance with the test circuit (table FF.1) and maintained at this value for at least 10 s *.

The voltage is then decreased without interruption to 1,1 U or 1,1 $U/\sqrt{3}$ in accordance with the test circuit and the partial discharge quantity is measured at this test voltage (see table FF.1).

* Alternatively, the partial discharge test may be performed while decreasing the voltage after the power-frequency voltage tests.

As far as possible with respect to the actual background noise level, the partial discharge inception and the partial discharge extinction voltages should be recorded for additional information.

In general, tests on assemblies or sub-assemblies should be made with the switching devices in the closed position. In the case of disconnectors where deterioration of the insulation between the open contacts by partial discharges is conceivable, additional partial discharge measurements should be made with the disconnector in the open position.

FF.5 Maximum permissible partial discharge quantity

The maximum permissible partial discharge quantity at 1,1 U and/or 1,1 $U/\sqrt{3}$ shall be agreed between the manufacturer and the user.

NOTE — Limit values of the partial discharge quantity will not be specified until further substantiated information is available. For the time being, these values are left to the responsibility of the manufacturer or, in the case of acceptance tests, are subjected to agreement between the manufacturer and the user.

The partial discharge quantity is expressed in coulombs (C).

TABLE FF.1 — Test circuits and procedures

	Single-phase testing			Three-phase testing
	Procedure A	Procedure B		
Voltage source connected to	Each phase successively	Each phase successively	Three phases simultaneously	Three phases (figure FF.1)
Earth-connected elements	Both the other phases and all the parts earthed in service	Both the other phases	All the parts earthed in service	All the parts earthed in service
Minimum prestress voltage	1,3 U	1,3 U	1,3 $U/\sqrt{3}$	1,3 U [1]
Test voltage	1,1 U	1,1 U	1,1 $U/\sqrt{3}$	1,1 U [1]
Basic diagram				[2]

[1] Voltage between phases.
[2] Additional test in the case of a system without solidly earthed neutral (for type tests only).

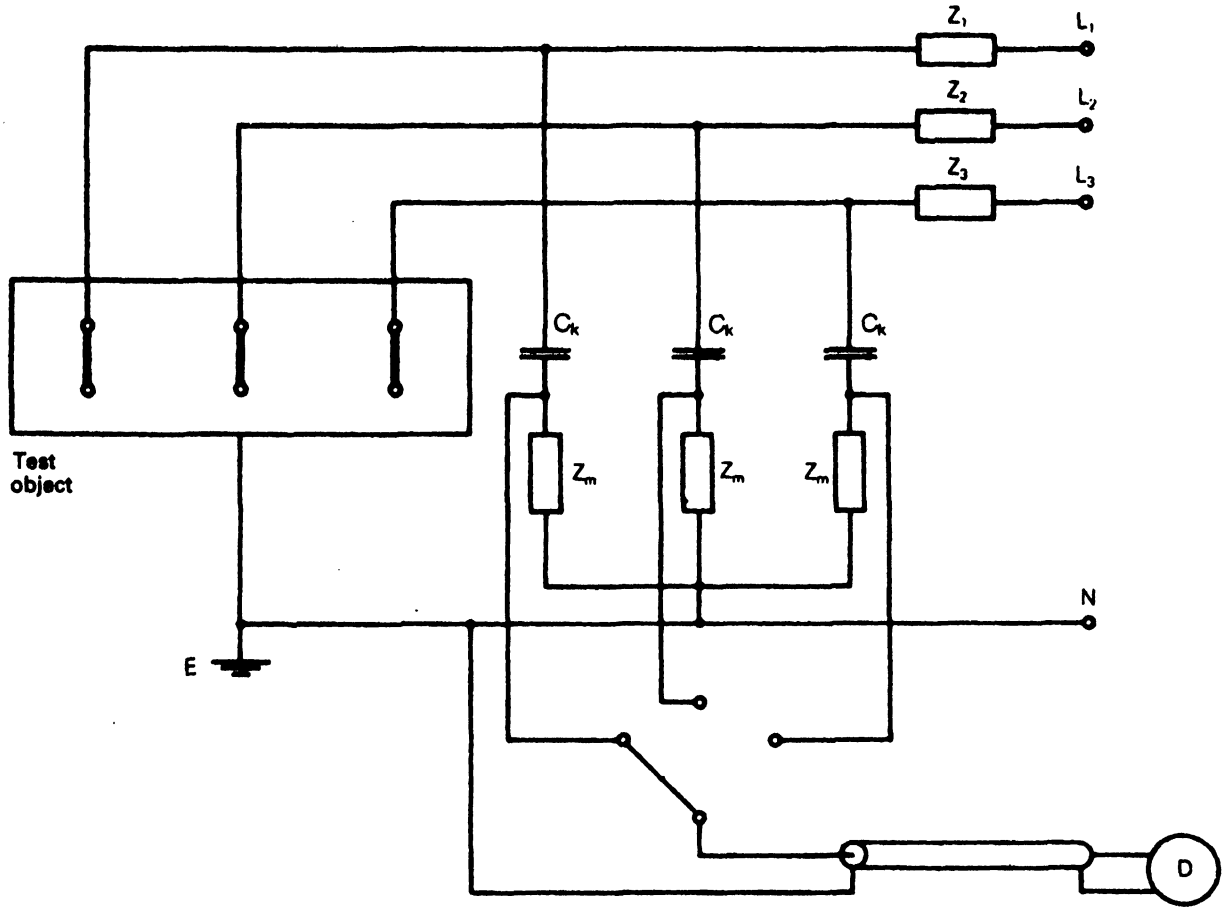

N = Neutral connection
E = Earth connection
L_1, L_2, L_3 = Terminals for the connection of the three-phase voltage source
Z_1, Z_2, Z_3 = Impedances of the test circuit
C_k = Coupling capacitor
Z_m = Measuring impedance
D = Partial discharge detector

FIGURE FF.1 — Partial discharge test circuit (three-phase arrangement)

Annex GG
(normative)

Gas tightness specifications and tests

INTRODUCTION

This annex GG is derived from a corresponding Appendix EE of I E C 56 (1987). At the TC 17 meeting in Helsinki (October 1987) it was decided to transfer gas tightness specifications and tests as a common clause to I E C 694 on the occasion of a future revision. Meanwhile the annexes shall be retained in the relevant standards (I E C 56 (1987), I E C 517 (1990) and I E C 298 (1990)).

Annex GG has been adapted as far as necessary to the conditions of medium voltage gas-filled compartments. Other modifications for example to delete definitions which are not relevant to this standard or to transfer definitions from the annex to the standard itself, have not been implemented in order to preserve the common character of the annex and thus to facilitate a later transfer to I E C 694.

GG.1 Scope and object

This annex applies to gas-tight assemblies and gas-filled compartments of metal-enclosed switchgear and controlgear which use gas, other than air at atmospheric pressure, as insulating or combined insulating and interrupting medium. Its purpose is to define characteristics and test procedures relative to gas tightness.

GG.2 Definitions

GG.2.1 *Controlled pressure system*

An assembly which is automatically refilled from an external or internal gas source.

GG.2.2 *Closed pressure system*

An assembly which is refilled only periodically by manual connection to an external gas source.

GG.2.3 *Sealed pressure system*

An assembly for which no further gas processing is required during its expected operating life.

Note — Sealed pressure systems are completely assembled and tested in the factory.

GG.2.4 *Rated filling pressure*, P_r (or density D_r)

The pressure in bars (gauge) referred to atmospheric air conditions of 20 °C and 1 013 hPa (or density) at which the gas-filled compartment is filled before being put into service or automatically refilled.

GG.2.5 *Minimum functional pressure,* P_m (or density D_m)

The gas pressure in bars (gauge) referred to atmospheric air conditions of 20 °C and 1 013 hPa (or density) at and above which the rated values of the switchgear are maintained and at which refilling becomes necessary.

GG.2.6 *Absolute leakage rate, F*

The amount of gas escaped by time unit, expressed in bar · cm^3/s.

GG.2.7 *Permissible leakage rate,* F_p

The maximum permissible leakage rate specified by the manufacturer for several gas-filled compartments combined into one gas system (gas-tight assembly), by using the tightness co-ordination chart TC, or for single gas-filled compartments.

GG.2.8 *Relative leakage rate,* F_{rel}

The absolute leakage rate related to the total amount of gas in the system at rated filling pressure (or density).

It is expressed in per cent per year or per cent per day.

GG.2.9 *Time between refillings, T*

The time elapsed between two refillings performed either manually or automatically to compensate the leakage rate *F*.

GG.2.10 *Number of refillings per day, N*

The number of refillings to compensate the leakage rate *F*.

This value is applicable to controlled pressure systems.

GG.2.11 *Pressure drop,* ΔP

The drop of pressure in a given time caused by the leakage rate *F*, without refilling.

GG.2.12 *Tightness co-ordination chart,* TC

A survey document supplied by the manufacturer, used when testing single gas-filled compartments to demonstrate the relationship between the tightness of the complete gastight assembly and that of single compartments.

GG.2.13 *Cumulative leakage measurement*

A measurement which takes into account all the leaks from a given assembly to determine the leakage rate.

GG.2.14 *Sniffing*

The action of slowly moving a leakmeter sensing probe around an assembly to locate a leak.

GG.3 Specifications for gas tightness

GG.3.1 *Controlled pressure systems*

The tightness of controlled pressure systems is specified by the number of refilling operations per day (N) or by the pressure drop per day (ΔP). The permissible values shall be given by the manufacturer.

GG.3.2 *Closed pressure systems*

The tightness of closed pressure systems is specified by two quantities:

— relative leakage rate F_{rel}
(preferred values are 1% and 3% per year);

— time between refillings T
(preferred values are 3 and 10 years).

GG.3.3 *Sealed pressure systems*

The tightness of sealed pressure systems is specified by their expected operating life. Preferred values are 10, 20 and 30 years.

GG.4 Tests

The purpose of tightness tests is to demonstrate that the total system leakage F does not exceed the specified value F_p.

If possible, the tests should be performed on a complete gas-tight assembly at P_r (or D_r). If it is not convenient, the tests may be performed on single gas-filled compartments. In these cases, the permissible leakage rate of the tested objects in relation to the leakage rate of the total assembly shall be shown by the tightness co-ordination chart TC. The possible leakages between compartments of different gas-tight assemblies shall also be taken into account (see figure GG.1).

In general, only cumulative leakage measurements allow calculation of leakage rates.

The type test report should include such information as:

— a description of the object under test, including its internal volume and the nature of the filling gas;

— the pressures and temperatures recorded at the beginning and end of the test and the number of refillings;

— the cut in and cut off pressure settings of the pressure (or density) control or monitoring device;

— an indication of the calibration of the meters;

— the results of the measurements;

— if applicable, the test gas and the conversion factor used to assess the results.

GG.4.1 *Type tests of pressure systems*

The tightness test shall be performed before and after the mechanical operation test and the temperature-rise tests (see Sub-clauses 6.102 and 6.3).

NOTE -- For temperature-rise tests the test object is normally fitted with internal sensors and metering feeders which may affect a correct tightness measurement. In this case an additional temperature-rise test with original enclosures has to be performed for the tightness measurement.

An increased leakage rate at extreme temperatures (if such tests are required in the relevant standards), and/or during operations, is acceptable provided that this rate resets to the initial value after the temperature is returned to normal ambient air temperature and/or after the operations are performed. The increased temporary leakage rate shall not exceed three times the specified permissible value F_p.

a) Controlled pressure systems

The relative leakage rate F_{rel} shall be checked by measuring the pressure drop ΔP over a period t sufficient to determine it. A correction should be made to take into account the variation of ambient air temperature. During this period the refilling device shall be inoperative.

$$F_{rel} = \frac{\Delta P}{P_r} \times \frac{24}{t} \times 100 \text{ (\% per day)}$$

$$N = \frac{\Delta P}{P_r - P_m} \times \frac{24}{t}$$

t = test time (hours)

NOTE — In order to maintain the linearity of the formula, ΔP should be of the same order of magnitude as $P_r - P_m$.

Alternatively, the number of refilling operations per day may be measured directly.

b) Closed pressure systems and sealed pressure systems

Any method (examples are given in figure GG.2) may be used to measure the leakage rate F, which is used in combination with the tightness co-ordination chart to calculate:

— the relative leakage rate F_{rel} and the time between refillings T for closed pressure systems;

— the expected operating life for sealed pressure systems.

Due to the comparatively small leakage rates of these systems, pressure drop measurements are not applicable.

If the test object is filled with a test gas different from the gas used in service and/or at a test pressure different from the normal operating pressure, corrective factors defined by the manufacturer shall be used for calculations.

NOTE — Leakage rate measurements in practice may have an inaccuracy of ±50%.

GG.4.2 *Routine tests of pressure systems*

Routine tests shall be performed at normal ambient air temperature with the assembly filled at the pressure (or density) corresponding to the manufacturer's test practice. Sniffing may be used under controlled conditions:

a) Controlled pressure systems

The test procedure corresponds to Sub-clause GG.4.1 *a)*.

b) Closed pressure systems and sealed pressure systems

The test may be performed in accordance with Sub-clause GG.4.1 *b)* at several stages of the manufacturing process on single compartments according to the tightness co-ordination chart TC.

Gas-insulated metal-enclosed switchgear, single-phase encapsulated, circuit-breaker compartments of the three phases connected to the same gas system.

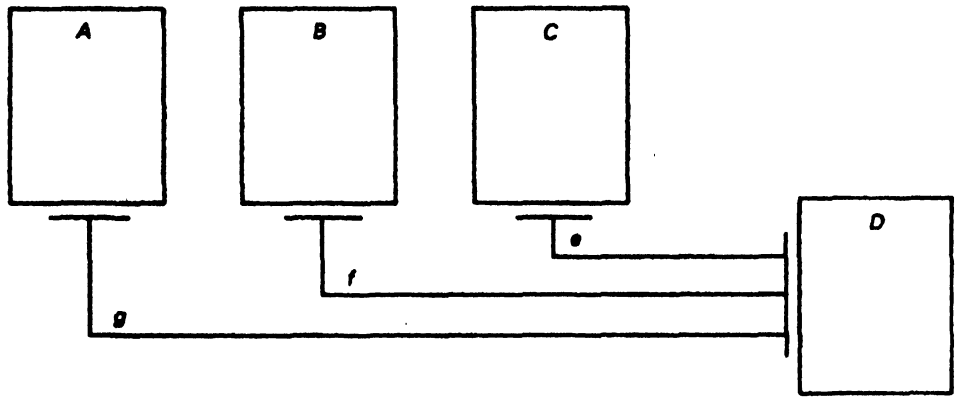

Leakage rate of the system:

Compartment *A*	14×10^{-6} bar × cm^3/s
Compartment *B*	14×10^{-6} bar × cm^3/s
Compartment *C*	14×10^{-6} bar × cm^3/s
Control box *D* (including valves, gauges, monitoring devices)	20×10^{-6} bar × cm^3/s
Piping *e*	2×10^{-6} bar × cm^3/s
Piping *f*	2×10^{-6} bar × cm^3/s
Piping *g*	2×10^{-6} bar × cm^3/s
Complete system	68×10^{-6} bar × cm^3/s

Rated filling pressure	P_r: 0,5 bar (gauge)
Minimum functional pressure	P_{ms}: 0,3 bar (gauge)
Total internal volume:	30 dm^3

$$F_{rel} = \frac{68 \times 10^{-6} \times 60 \times 60 \times 24 \times 365}{(0{,}5 + 1) \times 30 \times 10^3} \times 100 = 4{,}8\% \text{ per year}$$

$$T = \frac{(0{,}5 - 0{,}3) \times 30 \times 10^3}{68 \times 10^{-6} \times 60 \times 60 \times 24 \times 365} = 2{,}8 \text{ years}$$

FIGURE GG.1 — Example for a tightness co-ordination chart TC

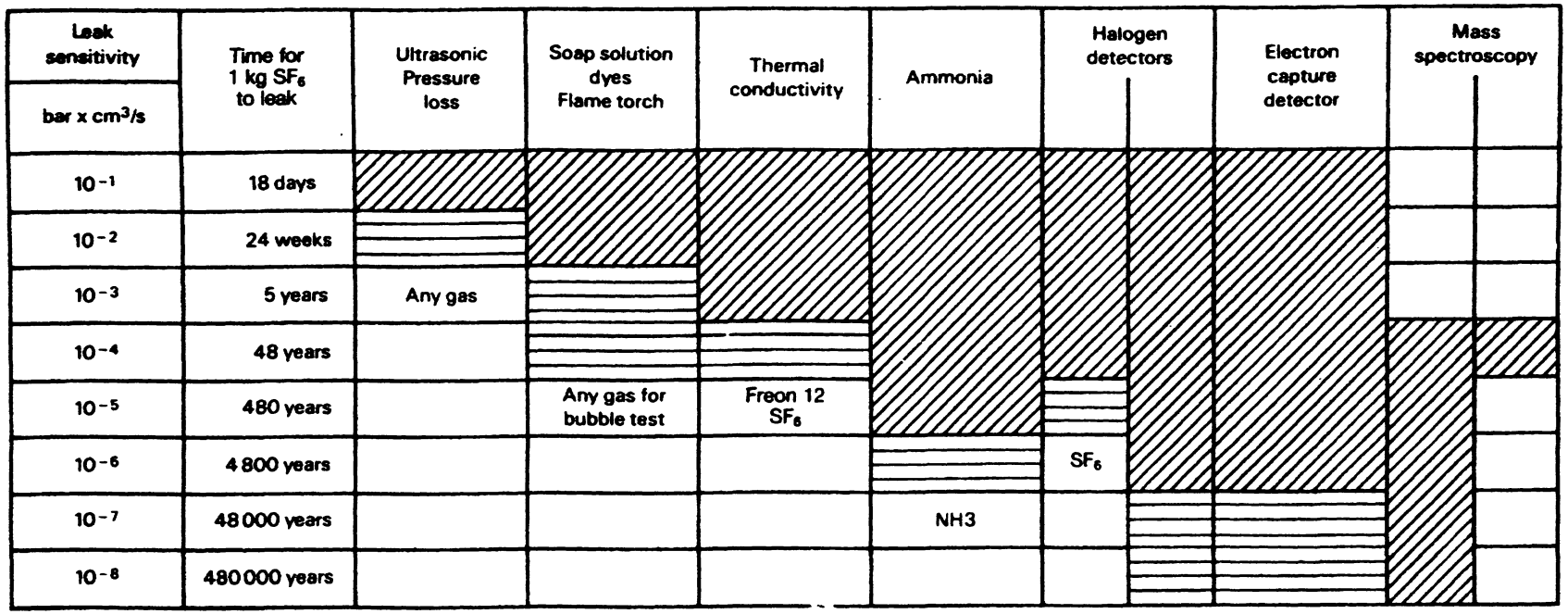

NOTES

1 Sniffing in good conditions. By integrated leakage measurement, better sensitivity can be achieved.

2 In integrated leakage measurement.

3 By sniffing.

FIGURE GG.2 — Comparison of leak detection methods

IEC 298

AMENDMENT 1

Page 5

1 Scope

Replace the fourth paragraph by the following:

Components contained in metal-enclosed switchgear and controlgear are to be designed and tested in accordance with their various relevant standards. This standard supplements the standards for the individual components regarding their installation in switchgear and controlgear.

The notes remain unchanged.

Page 11

5 Design and construction

Replace the first paragraph by the following:

Metal-enclosed switchgear and controlgear shall be designed so that normal service, inspection and maintenance operations, determination of the energized or de-energized state of the main circuit, including the usual checking of phase sequence, earthing of connected cables, locating of cable faults, voltage connected cables or other apparatus and the elimination of dangerous electrostatic charges, can be carried out safely.

Page 12

5.3.2 *Earthing of the enclosure*

Replace the second paragraph by the following:

An earthing conductor shall be provided extending the whole length of the metal-enclosed switchgear and controlgear. The current density in the earthing conductor, if of copper, shall under the specified earth fault conditions not exceed 200 A/mm^2 for a rated duration of short-circuit of 1 s, and 125 A/mm^2 for a rated duration of short-circuit of 3 s. However, its cross-section shall be not less than 30 mm^2. It shall be terminated by an adequate terminal intended for connection to the earth system of the installation.

Replace the last paragraph by the following:

The metallic parts of a withdrawable part which are normally earthed shall also remain earth-connected in the test and disconnected positions under the prescribed conditions for the isolating distance (see IEC 129) and also in any intermediate position.

Add at the end the following new paragraph:

The metallic parts of a removable part which are normally earthed shall remain earth-connected until the removable part is separated from the switchgear.

Page 14

5.101.1 *Protection of persons against approach to live parts and contact with moving parts*

Modify the title as follows:

5.101.1 *Protection of persons against access to hazardous parts and protection of the equipment against solid foreign objects*

Replace the text of this subclause and table 1 by the following:

Refer to IEC 694.

5.101.2 *Protection of equipment against external effects*

Modify the title as follows:

5.101.2 *Protection against ingress of water*

Replace the text of this subclause by the following:

Refer to IEC 694.

5.101.3 *Protection of equipment against mechanical damage*

Replace the title as follows:

5.101.3 *Protection of equipment against mechanical impact under normal service conditions*

Replace the text of this subclause by the following:

Refer to IEC 694.

5.101.4 *Internal fault*

Replace, on page 15, *the penultimate paragraph by the following:*

If such measures are considered to be insufficient, then a test in accordance with annex AA may be agreed between the manufacturer and the user. This test covers only the case of a fault resulting in an arc occurring entirely in air, or in another insulating gas within the enclosure, or within components having housings which form part of the enclosure. In order to take into account possible failure in other components, practical steps shall be taken for the safety of persons who may be in the vicinity of the switchgear.

Page 16

5.102.3 *Tightness of gas-filled compartments*

Replace the first paragraph by the following:

The manufacturer shall state the pressure system used and the permissible gas-leakage rate for the gas-filled compartments (refer to IEC 694).

5.102.4 *Covers and doors*

Replace, on page 17, *item b) in the third paragraph by the following:*

b) those which need to be opened for the normal purposes of operation (removable covers, doors). These shall not require tools for their opening or removal. For the safety of persons they shall be provided with suitable interlocking devices and/or locking facilities (e.g. provisions for padlocks or for bolting).

Add the following note after the last paragraph:

NOTE – Attention should be paid to the requirement (if any) to carry out operation of the switching devices without voltage/current on the main circuit with doors and covers open as part of the maintenance procedures.

Page 17

5.103.1 *General*

Replace the first paragraph by the following:

Partitions and shutters shall provide at least a degree of protection as specified in IEC 694.

Replace item b) in the second paragraph by the following:

b) apart from mechanical strength, the insulating material shall withstand likewise the power-frequency test voltages specified in item a). The appropriate test methods given in IEC 243-1 should be applied;

Add, on page 18, *the following to the penultimate paragraph:*

Means shall be provided to ensure the reliable operation of the shutters, e.g. by a mechanical drive, where the movement of the shutters is positively driven by the movement of the removable part.

Replace the last paragraph by the following:

If, for maintenance or test purposes, there is a requirement that one set of fixed contacts shall be accessible through opened shutters, all the shutters shall be provided with means of locking them independently in the closed position or it shall be possible to insert a screen to prevent the live set of fixed contacts being exposed. When, for maintenance or test purposes, the automatic closing of shutters is made inoperative in order to retain them in the open position, it shall not be possible to return the switching device to the service position until the automatic operation of the shutters is restored. This restoration may be achieved by the action of returning the switching device to the service position.

Add the following sentence to the note:

Non-metallic shutters shall comply with the requirements for non-metallic partitions.

Page 19

5.106 *Interlocks*

Replace, in item a), the third paragraph by the following:

It shall not be possible to close the circuit-breaker, switch or contactor in the service position unless any auxiliary circuits associated with the automatic opening of these devices are connected. Conversely, it shall not be possible to disconnect the auxiliary circuits with the circuit-breaker closed in the service position.

Item b), first paragraph:

Replace this paragraph by the following:

Interlocks shall be provided to prevent operation of disconnectors under conditions other than those they are intended for (see IEC 129). The operation of a disconnector shall not be possible unless the associated circuit-breaker, switch or contactor is in the open position.

Add the following paragraph before the note:

If earthing of a circuit is provided by a circuit-breaker in series with an earthing switch, the earthing switch shall be interlocked with the circuit-breaker and the circuit-breaker shall be secured against unintentional opening.

Page 20

6 Type tests

Replace, on page 21, the existing items f) and k) by the following new items f) and k):

	Subclause
f) Tests to verify the protection of persons against access to hazardous parts and the protection of the equipment against solid foreign objects:	6.103
k) Tests to verify the protection of the equipment against mechanical impact:	6.109

Page 25

6.5.102 *Tests on earthing circuits*

Replace the second paragraph by the following:

The short-circuit current tests with earthing devices shall be carried out three-phase, with further single-phase tests if necessary in order to verify the performance of all the circuits that are intended to provide the connection between the earthing device and earth.

Page 26

6.102.1 *Switching devices and removable parts*

Replace this subclause by the following:

Switching devices and withdrawable parts shall be operated 50 times, and removable parts inserted 25 times and removed 25 times to verify satisfactory operation of the equipment.

6.103 *Verification of the degree of protection*

Replace the title and text of this subclause as well as table 2 by the following:

6.103 *Verification of the IP-coding*

Refer to IEC 694.

6.105 *Gas tightness tests of gas-filled compartments*

Replace the first sentence by the following:

Refer to IEC 694.

Page 27

6.107 *Weatherproofing tests*

Replace this subclause by the following:

When agreed between manufacturer and user, a weatherproofing test can be made on metal-enclosed switchgear and controlgear intended for outdoor use. A recommended method is given in IEC 694.

6.108 *Arcing due to internal fault*

Replace the second paragraph by the following:

The test procedure represents the effects of a fault resulting in an arc occurring entirely in air or another insulating gas within the enclosure when the doors and covers are closed. The test procedure also covers the particular case of a fault occurring in solid insulation where this insulation is both applied during assembly on site of the metal-enclosed switchgear (e.g. tape) and does not comprise prefabricated insulating parts. Faults in all other solid insulation and in liquid insulation are not covered by the test procedure.

Add the following new subclause:

6.109 *Mechanical impact tests*

Refer to IEC 694.

Page 29

7.104 *Gas tightness tests of gas-filled compartments*

Replace this subclause by the following:

Refer to IEC 694.

Page 35

Annex AA

Table AA.2 – Examples of measures limiting the consequences of internal faults

Add to the table the following fifth example:

- Transfer of a withdrawable part to or from the service position only when the front door is closed

AA.1 Introduction

Replace the first paragraph by the following:

Internal faults inside metal-enclosed switchgear and controlgear can occur in a number of locations and can cause various physical phenomena.

AA.3 Test arrangements

Replace this subclause by the following:

The choice of the functional units, their number, their equipment and their position in the room, as well as the place of initiation of the arc are to be decided between manufacturer and user. In each case, the following points should be observed:

- functional units of representative sizes should be tested;
- representative compartments of different designs should be tested;
- the mounting conditions should be as close as possible to those of normal service. The room should be represented at least by the floor, the ceiling, two walls perpendicular to each other and simulated cable access ways;

NOTE – If the switchgear is installed in combination with a special exhaust channel, leading the gas out of the room, no room mock-up is necessary.

- the functional units should be fully equipped. Mock-ups of internal components are permitted, provided they have the same volume and external material as the original items. Subclause 5.101.4 should be taken into account;
- the test unit shall be earthed at the point provided;
- in the case of gas-filled compartments the test should be made with the original gas at the rated filling pressure.

NOTE – As an alternative and with the agreement of the manufacturer, the test may be carried out with air, but it has to be taken into account that the pressure rise will be different.

- the arc shall be initiated in a way that is representative of faults which could occur under service conditions.

Page 36

AA.4.1 *General*

Replace this subclause by the following:

The tests on metal-enclosed switchgear and controlgear should be carried out three-phase. The short-circuit current applied during the test corresponds to the rated short-time withstand current. It may be lower, if specially required by the manufacturer.

Page 37

AA.5.2 *Arc initiation*

Replace the first two paragraphs and the note by the following:

The arc should preferably be initiated between the phases by means of a metal wire of about 0,5 mm diameter or, in the case of segregated phase conductors, between one phase and earth. If the application of such a wire is not practicable in case of arc initiation in a component, it is permissible as an alternative to initiate the fault by other methods. In this case, the method chosen shall be agreed between the manufacturer and the user.

In functional units where the live parts are covered by solid insulating material, the arc should be initiated between two adjacent phases or, in the case of segregated phase conductors, between one phase and earth at the following locations:

i) at gaps in the insulation of insulation-embedded parts;

ii) by perforation at insulated joints made on site when prefabricated insulating parts are not used.

Except for case ii), solid insulation shall not be perforated. The infeed from the supply circuit shall be three-phase to allow the fault to become three-phase.

AA.5.3.2 *Accessibility Type A*

Page 38

AA.5.3.3 *Accessibility Type B*

Add in both subclauses in the second paragraphs the following new second sentence:

Care should be taken when positioning the indicators to take into account the possibility of hot gas escaping in slant directions.

AA.6 Assessment of the test

Replace the first paragraph by the following:

The following criteria should be used to record the results of the internal fault tests.

Delete, under criterion No. 2, the words: "made of metal or plastic".

Page 39

AA.7 Test report

Replace the second dash by the following two new dashes:

- Arrangement of the test connections.
- Point and method of initiation of the internal fault.

Replace the penultimate dash by the following:

- Assessment of the test results, including a record of the observations in accordance with AA.6.

Pages 43, 44 and 45

Delete annex CC.

Pages 53, 54, 55, 56, 57 and 58

Delete annex GG.