STUDY MATERIAL FOR ELECTRICAL SUPERVISOR LICENSE EXAMS (DOMESTIC AND INDUSTRIAL)

Solved MCQs and Question Papers from State Electricity Board Exams for Supervisor License (Supervisor Certificate of Competency)

SUDESH K JAIN



Click to Buy
Amazon | Flipkart | Pothi Store

भारतीय मानक

(Reaffirmed 2002)

वोल्टता ट्रांसफार्मर — विशिष्टि

भाग 4 संधारित्र वोल्टता ट्रांसफार्मर

(दूसरा पुनरीक्षण)

Indian Standard

VOLTAGE TRANSFORMERS — SPECIFICATION

PART 4 CAPACITOR VOLTAGE TRANSFORMERS

(Second Revision)

Second Reprint JANUARY 1998

UDC 621·314·223

© BIS 1992

BUREAU OF INDIAN STANDARDS
MANAK BHAVAN, 9 BAHADUR SHAH ZAFAR MARG
NEW DELHI 110002

August 1992

Price Group 4

FOREWORD

This Indian Standard (Part 4) was adopted by the Bureau of Indian Standards, after the draft finalized by the Instrument Transformers Sectional Committee had been approved by the Electrotechnical Division Council.

This standard was first published in 1967 and was subsequently revised in 1978. Second revision of this standard has been undertaken to bring it in line with the latest developments at international level.

Indian Standard on voltage transformers have been published in four parts:

Part 1 General requirements

Part 2 Measuring voltage transformers

Part 3 Protective voltage transformers

Part 4 Capacitor voltage transformers

In the preparation of this revision assistance has been derived from the following:

IEC Pub 186 (1987) Voltage transformers with Amendment No. 1 December 1988; published by International Electrotechnical Commission.

BS 3941 : 1975 Voltage transformers with latest amendments, published by British Standards Institution.

In addition to the requirements specified in this standard, the capacitor divider part of the capacitor voltage transformers should be tested as per IS 9348 : 1979 'Coupling capacitors and capacitor devices'. Suitable reference to IS 9348 : 1979 has therefore been made in the standard wherever necessary.

For the purpose of deciding whether a particular requirement of this standard is complied with, the final value, observed or calculated, expressing the result of a test or analysis, shall be rounded off in accordance with IS 2 : 1960 'Rules for rounding off numerical values (*revised*)'. The number of significant places retained in the rounded off value should be the same as that of the specified value in this standard.

Indian Standard

VOLTAGE TRANSFORMERS — SPECIFICATION

PART 4 CAPACITOR VOLTAGE TRANSFORMERS

(Second Revision)

1 SCOPE

This standard (Part 4) covers additional requirements for capacitor voltage transformers intended to be connected between line and earth, and comprising essentially a capacitor divider and an eletromagnetic unit.

NOTES

1 The general requirements for such voltage transformers are covered in Part 1 of this standard.

2 The requirements for capacitor voltage transformers in which the capacitance of the high voltage capacitor in such that outputs of 10 VA cannot be obtained have not been specified although some of the clauses may apply to such devices.

2 TERMINOLOGY

2.0 For the purpose of this standard, the following definitions, in addition to those given in Part 1 shall apply.

2.1 Capacitor Voltage Transformer

A voltage transformer comprising a capacitor divider unit and an electromagnetic unit so designed and interconnected that the socondary voltage of the electromagnetic unit is substantially proportional to and in phase with the primary voltage applied to the capacitor divider unit.

2.2 Voltage Divider

A device comprising resistors, capacitors or inductors by means of which it is possible to obtain between two points a voltage proportional to the voltage to be measured.

2.2.1 *Capacitor (Voltage) Divider*

A voltage divider comprising only capacitors.

2.2.2 *High-Voltage (or Line) Terminal*

Terminal to be connected to the power line.

2.2.3 *Low-Voltage Terminal*

Terminal to be connected to the carrier frequency transmission circuit or to the earth terminal.

NOTE — The high voltage and low voltage terminals are the primary terminals.

2.2.4 *Intermediate (Voltage) Terminal*

Terminal to be connected to an intermediate circuit such as the electromagnetic unit of a capacitor voltage transformer.

2.3 High Voltage Capacitor (C_1)

Capacitor connected between the high-voltage terminal and the intermediate-voltage terminal.

2.4 Intermediate-Voltage Capacitor (C_2)

Intermediate-voltage terminal and the low-voltage terminal or the earth terminal.

2.5 Electromagnetic Unit

The component of a capacitor voltage transformer, connected across the intermediate terminal and the earth terminal of the capacitor divider (or possibly directly connected to earth when a carrier-frequency coupling device is used) which supplies the secondary voltage.

NOTE — An electromagnetic unit comprises essentially a transformer to reduce the intermediate voltage to the required value to secondary voltage, and an inductive reactance, approximately equal, at rated frequency, to the capacitive reactance of the two parts of the divider connected in parallel (C_1+ C_2). The inductive reactance may be incorporated wholly or partially in the transformer (*see* Fig. 1 and 2 for diagrams or capacitor voltage transformer and its equivalent circuit).

2.6 Intermediate Voltage

The voltage to earth at the intermediate voltage terminal of the capacitor divider unit when primary voltage is applied between the primary and earth terminals.

2.7 Voltage Ratio (of a Capacitor Divider)

Ratio between the sum of the capacitances of the high-voltage and intermediate-voltage capacitors and the capacitance of the high voltage capacitor.

$$\frac{C_1 + C_2}{C_1}$$

NOTES

1 C_1 and C_2 include the stray capacitances, which are generally negligible.

2 This ratio corresponds also to the ratio of the primary voltage to the open-circuit intermediate voltage.

2.8 Open-Circuit Intermediate Voltage

The voltage across the intermediate-voltage capacitor when a voltage is applied between the high-voltage and low-voltage terminals, no impedance being connected in parallel with the intermediate-voltage capacitor.

NOTE — This voltage is equal to the applied voltage (primary voltage) divided by the voltage ratio.

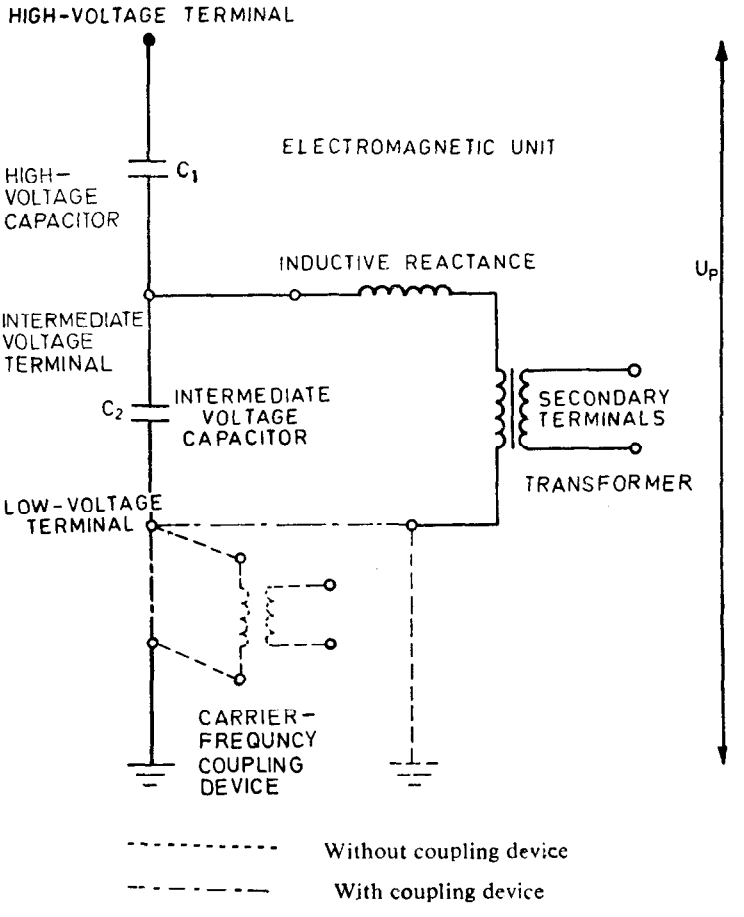

NOTE — The protective device defined in **2.12** is not shown in diagram as it may be located in several different ways depending on its nature.

FIG. 1 TYPICAL DIAGRAM FOR A CAPACITOR VOLTAGE TRANSFORMER

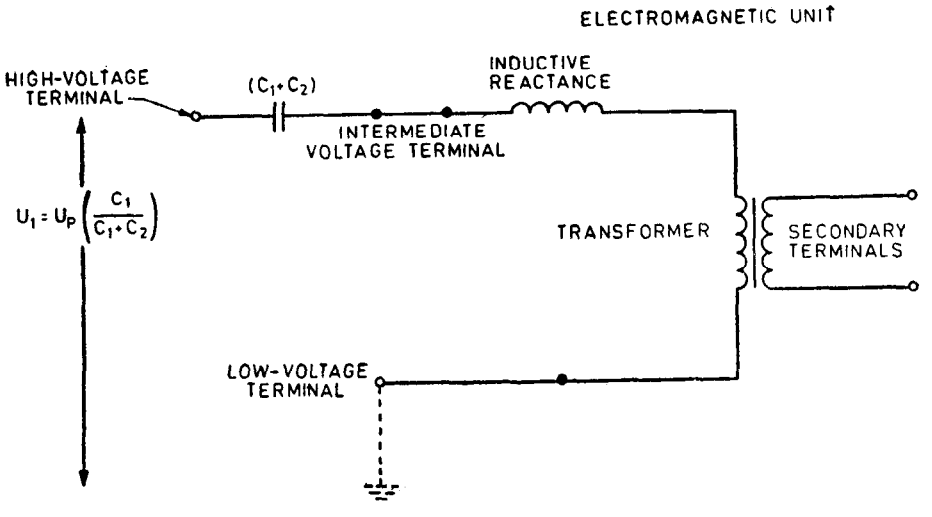

FIG. 2 DIAGRAM OF EQUIVALENT CIRCUIT FOR A CAPACITOR VOLTAGE TRANSFORMER

2.9 Rated Open Circuit Intermediate-Voltage

The voltage across the intermediate-voltage capacitor when the rated voltage is applied between the high-voltage and low-voltage terminals and both the high-voltage and the intermediate-voltage capacitors have the capacitance value for which they have been designed.

2.10 Reference Range of Frequency

The range of frequency value within which a capacitor voltage transformer complies with the relevant accuracy requirements (*see* Note 2 of **5.2**).

2.11 Reference Range of Temperature

The range of ambient temperature values within which a capacitor voltage transformer complies with the relevant accuracy requirements (*see* Note 2 of **5.2**).

2.12 Protective Device

A device incorporated in a capacitor voltage transformer for the purpose of limiting over-voltage which may appear across one or more of its components, and/or to prevent sustained ferro-resonance.

NOTE — The device may include a spark gap, and may be located in several different ways according to its nature.

2.13 Carrier-Frequency Coupling Device

A circuit element intended to permit the injection of carrier frequency, and which is connected between the earth terminal of a capacitor divider unit and earth, having an impedance which is insignificant at power frequency but appreciable at the carrier frequency.

3 GENERAL REQUIREMENTS

3.1 Unless otherwise specified in this standard all capacitor voltage transformers shall comply with the relevant requirements specified in Parts 1, 2 and 3 of this standard.

3.2 In addition, the capacitors shall comply with the requirements of IS 9348 : 1979.

4 RATING

4.1 Standard Reference Range of Frequency

The standard reference range of frequency shall be from 99 percent to 101 percent of the rated frequency for accuracy classes for measurement, and from 96 percent to 102 percent for accuracy classes for protection.

4.2 Standard Values of Rated Output

The standard values of rated output shall be as specified in **6.4** of Part 1 of this standard.

NOTE — Attention is drawn to the fact that the load taken by a resistor or reactor permanently connected to the secondary terminals and forming an integral part of the electromagnetic unit is not considered to be part of the rated output.

5 ACCURACY REQUIREMENT

5.1 Standard Accuracy Classes

The standard accuracy classes for capacitor voltage transformers shall be:

a) For measurement: 0.2, 0.5, 1.0 and 3.0 (*see* Part 2 of this standard), and

b) For protection 3P and 6P (*see* Part 3 of this standard).

5.2 Limits of Voltages Error and Phase Displacement

The voltage error and phase displacement shall not exceed the values given in **5** of Part 2; and **5** of Part 3 of this standard for the appropriate accuracy class, under the conditions specified therein and also for any value of temperature and frequency within the reference range (*see* **4.2** of Part 1; and **4.1** of this standard).

NOTE

1 For capacitor voltage transformers with electromagnetic units having two separate secondary windings reference should be made to **6** of Part 2 and **6** of Part 3 of this standard.

2 Whatever the ambient temperature may be within its reference range, it is necessary for the best to be carried out in steady state temperature conditions.

6 EFFECTS OF TRANSIENTS

6.1 Ferro-resonance

6.1.1 When a capacitor transformer, supplied at 120 percent of rated voltage and with a substantially zero burden, has its secondary terminals short-circuited, and the short circuit suddenly removed, the peak of the secondary voltage shall revert to a value which does not differ from its normal values by more than 10 percent after ten cycles of rated frequency.

6.1.2 When a capacitor voltage transformer, supplied at a voltage corresponding to its rated voltage factor and with substantially zero burden, has its secondary terminals short-circuited, and the short circuit suddenly removed, ferro-resonance shall not be sustained for more than 2 seconds.

6.2 Transient Response

Following a short circuit of the supply between the high-voltage terminal and the low-voltage terminal connected to earth, the secondary output voltage of a capacitor voltage transformer shall decay, within one cycle or rated frequency, to a value of less than 10 percent of the peak value before short circuit.

NOTE — The influence of the transient response on the behaviour of the network protection is very complex matter and it is not possible to give value valid for all cases. The influence on the relay is not only dependent on the amplitued but also on the frequency of the transient. The given value permits correct behaviour of the usual electromechanical protection relay for usual line length and short-circuit currents. For high speed relay (for example, solid state relay) or very short lines, or low short-circuit current, the transient response should be part of an agreement between purchaser and manufacturer of the network protection relay and the capacitor voltage transformer.

7 COUPLING DEVICE

7.1 Carrier-Frequency Coupling Device

When a carrier-frequency coupling device is connected by the manufacturer into the earth lead of the intermediate-voltage capacitor the accuracy of the capacitor voltage transformer shall remain within the specified class.

NOTE — The impedance offered by the coupling devices shall not exceed 1 / 1 000 of the impedance of intermediate-voltage capacitance.

8 MARKING

8.1 Rating Plate

The capacitor voltage transformer (or the electromagnetic unit if separate) shall carry the following additional information on the rating plate:

a) The words 'Capacitor voltage transformer' or a similar reference.

b) Rated capacitance between high-voltage and low-voltage terminals:

$$C_N = \frac{C_1 \times C_2}{C_1 + C_2}$$

c) Identification numbers of the capacitor units belonging to the capacitor voltage transformer (in the case of when the capacitor stack is composed of more than one unit).

d) Only in the cases where an intermediate terminal is still accessible when the capacitor voltage transformer is completely assembled.

i) rated open circuit intermediate-voltage in volts or kilovolts; and

ii) the measured voltage ratio.

The capacitor divider unit shall carry markings in accordance with IS 9348 : 1979.

NOTE — The above mentioned information may be indicated on two rating plates, one for the magnetic part and one for the capacitive part.

9 TEST

9.1 General

9.1.1 The type and routine tests on capacitor voltage transformers are essentially the same at those specified in Parts 1, 2 and 3 of this standard with exceptions below. Type tests shall be made in accordance with **9.2.1** to **9.2.5** and routine tests in accordance with **9.3.1** and **9.3.2**.

9.1.2 The tests specified in **9.2.3, 9.2.4, 9.2.5** and **9.3.2** are direct tests on the capacitor voltage transformer (Fig.1) or tests on the equivalent circuit (Fig.2) as specified in the relevent clauses.

9.1.3 The main conditions to allow tests on the equivalent circuit is given in Annex A.

9.1.4 All tests shall be performed with the actual electromagnetic unit and not with a model. On the contrary, a specially made equivalent capacitance with the capacitance value of C_1+C_2 may be used in place of the capacitor divider.

9.1.5 The circuit used for each test shall be indicated on the test report.

9.1.6 The capacitors should be tested in accordance with IS 9348 : 1979 as far as possible taking into account any other duty that the capacitors may have to perform in addition to their operation as the voltage divider of the capacitor voltage transformer.

9.2 Type Test

9.2.1 *Temperature Rise Test*

The temperature rise test shall be made in accordance with **9.5** of Part 1 and may be performed on the electromagnetic unit alone.

9.2.2 *Impulse Test*

An impulse test shall be performed, preferably on a complete capacitor voltage transformer, in accordance with **9.6** of Part 1 but using a (1.2 to 5)/(40 to 60) microsecond impulse, or at the option of the manufacturer, the capacitor divider unit may be tested in accordance with IS 9348 : 1979 and the electromagnetic unit given a separate impulse test in accordance with **9.6** of Part 1 deviating only by the value of test voltage, which shall be reduced in accordance with the voltage ratio of the capacitor divider unit.

NOTE — If a protective gap across the electromagnetic unit is incorporated, it should be prevented from functioning during the tests. Any protective gap across the carrier-current coupling device should be short-circuited during the test.

9.2.3 *Ferro-resonance Tests*

The tests shall be made on a complete capacitor voltage transformer (or on the equivalent circuit provided the relations given in Annex A are satisfied) to prove compliance with **6.1**. The tests shall be made by short-circuiting the secondary terminals for at least 0.1 s, the short circuiting being opened by a protective device (for example fuse, circuit-breaker, etc). The burden on the capacitor voltage transformer after the short circuit has cleared shall be only that imposed by the recording equipment and shall not exceed 5 VA. The voltage of the power source (high voltage terminal), the secondary voltage and the short-circuit current during the tests shall be recorded and oscillograms shall be part of the test report.

NOTE — If it is known that a saturable burden will be used in service, agreement should be made between the purchaser and the manufacturer regarding the tests to be made at or near that burden.

9.2.3.1 During the short circuit the voltage of the power source shall not differ by more than 10 percent from the voltage before short circuit and it shall remain substantially sinusoidal. The voltage drop over the short circuit loop (contact resistance of the closed contactor included) measured directly at the secondary terminals of the capacitor voltage transformer, shall be less than 10 percent of the voltage at the same terminals before the short circuit.

NOTE — In order to ensure that the voltage of the power source does not differ during the short circuit by more than 10 percent from the voltage before short circuit, the short circuit impedance of the supply circuit should be low. If the test is performed on the complete capacitor voltage transformer, this condition is generally fulfilled because of the relatively high current of the capacitor divider. On the contrary, should the equivalent circuit be employed, a much lower impedance source than that which would be suitable for a accuracy measurement only is necessary.

9.2.3.2 The test shall be made a minimum of 30 times at 120 percent of rated primary voltage.

9.2.3.3 The test shall be repeated 10 times at a primary voltage corresponding to the appropriate voltage factor.

9.2.4 *Transient Response Tests*

The test to prove compliance with **6.2** shall be made on complete capacitor voltage transformer or on the equivalent circuit (provided that the relations given in Annex A are satisfied) by short-circuiting the high-voltage and earthed low voltage terminals while the capacitor voltage transformer is operating at rated primary voltage at 25 percent and 100 percent rated burden. The burden shall be one of the following at the option of the manufacturer:

a) Series burden composed of pure resistance and an inductive reactance connected in series; and

b) Series-parallel burden composed of two impedance connected in parallel, one impedance being a pure resistance and the other having a power factor of 0.5.

The circuit diagrams and values of the components of both burdens are given in Annex B.

9.2.4.1 The collapse of the secondary voltage shall be recorded on an oscillograph. The oscillograms shall be part of the test report.

9.2.4.2 The test shall be made at the option of the manufacturer, either 10 times at random, or twice at the peak of the primary voltage and twice at the zero passage of primary voltage. In the latter case, the phase angle of the primary voltage shall not differ by more than ± 20 electrical degrees from the peak and zero passage.

9.2.5 *Test for Accuracy*

9.2.5.1 The tests should be made at rated frequency, at room temperature and at both extreme temperature on a complete capacitor voltage transformer, or on the equivalent circuit for class 1 above. For classes 0.5 and 0.2, the use of the equivalent circuit, or a calculation of the influence of the temperature shall be agreed upon between the purchaser and the manufacturer.

NOTE — Tests at extreme temperature on a complete capacitor voltage transformer are more severe than tests on the equivalent circuit or than a calculation of the temperature influence, but are very difficult to perform and expensive. Tests on a complete capacitor voltage transformer give also the best possible indication concerning the measuring errors which may appear in service because of the changes in ambient temperature.

9.2.5.2 If the equivalent circuit is used, two measurements under identical conditions of voltage, burden, frequency and temperature (within the standard reference range) have to be carried out; once on the complete apparatus and once with the equivalent circuit.

The difference between the results of these two measurements must not exceed 50 percent of the accuracy class (for instance 0.25 percent and 10 min for accuracy class 0.5) and must, of course be taken into account in determining the errors of the complete capacitor voltage transformer at the limits of temperature and frequency.

9.2.5.3 Provided the temperature characteristics of the capacitor divider are known over the reference range of temperature, the errors at extreme values of temperature may be determined by calculations based on the measured results at one temperature and the temperature coefficient of the capacitor divider. Alternatively, a measurement at room temperature only may be performed on the equivalent circuit of

the equivalent capacitance (for example a capacitor made especially for this purpose) is adapted to the temperature extreme values, taking into account the temperature coefficient of the actual capacitor divider.

9.2.5.4 Tests at a constant value of temperature shall be made at the extreme values of frequency.

9.2.5.5 The actual values of test frequency and test temperature shall be part of the test report.

NOTES

1 Measurement of the capacitance and of the temperature coefficient of the capacitors is part of the requirements of IS 9348 : 1979.

2 The tests shows the influence of burden, voltage and frequency as well as of temperature on the equivalent capacitance $C_1 + C_2$. Attention should be paid to the fact that the temperature effect on the inductive reactance and on the winding resistances of the electromagnetic unit can be determined only if the actual electromagnetic unit is subjected to the extreme temperatures. As a supplementary indication concerning changes in the capacitor divider ratio caused by temperature, it is recommended to measure the voltage errors and phase displacements before and immediately after (or during), the temperature-rise test of Part 1 performed as a direct test on the capacitor voltage transformer. In this case, the measurement as well as the temperature rise test cannot be performed on the equivalent circuit of the electromagnetic unit alone.

3 Present-day service experience has shown that capacitor voltage transformer may be used satisfactorily in the accuracy class 0.5. Unfortunately it is at present not possible to recommend tests resulting in satisfactory conclusion concerning the amount of influence of sudden changes in temperature of particular weather conditions, of strary capacitances and of leakage currents on the voltage errors and phase displacements. These influences can be evaluated only by theoretical considerations.

9.3 Routine Tests

9.3.1 *Power-Frequency Tests*

The test voltage corresponding to the rated insluation level shall always be determined as provided in Part 1 of this standard.

9.3.1.1 *Capacitor voltage divider*

Tests on the capacitor voltage divider shall be made in accordance with IS 9349 : 1979 with the test voltage determined in accordance with Part 1 of this standard for the rated insulation level.

9.3.1.2 *Low-voltage terminal of the capacitor voltage divider*

Capacitor dividers with a low-voltage terminal shall be subjected for 1 min to an ac test voltage 10 kV (rms) between the low voltage and earth terminals.

If the low-voltage terminal is now exposed to the weather or if a carrier frequency coupling device with overvoltages protection is part of the capacitor voltage transformer, a lower test voltage of 4 kV (rms) may be applied, unless otherwise agreed between manufacturer and purchaser.

9.3.1.3 *Electromagnetic unit*

For this test, the electromagnetic unit may be disconnected from the capacitor divider. The test voltage may be either applied between the intermediate-voltage terminal and earth or alternatively, induced from the secondary winding. In either case, it shall have a value equal to the test voltage for the whole of the capacitor voltage determined in accordance with Part 1 of this standard for the rated insulation level, divided by its voltage ratio. The frequency may be increased to prevent excessive magnetizing current and the test shall be applied for a time in accordance with **9.3.1.2** of Part 1.

NOTE — If a protective gap across the electromagnetic unit is incorporated, it should be prevented from functioning during the tests. Any protective gap across the carrier-current coupling device should be short-circuited during the tests.

9.3.2 *Tests for Accuracy*

9.3.2.1 Routine tests for accuracy shall be made on the complete capacitor voltage transformer or on the equivalent circuit at one value of frequency within the standard reference range of frequency, and at one value of temperature within the standard reference range of temperature. The actual values of test frequency and test temperature shall be part of the test report.

NOTE — Test on the equivalent circuit are generally less accurate than tests on the complete circuit.

9.3.2.2 Routine tests at 100 percent rated voltage with 25 percent and 100 percent rated burden are permissible provided it has been shown by type test on a similar capacitor voltage transformer that such a reduced number of tests is sufficient to prove compliance with the accuracy requirements.

9.3.2.3 Tests on the equivalent circuit can be performed if:

a) the type test according to **9.2.5** has shown that the difference between the measured values on the complete circuit and the equivalent circuit is smaller than 20 percent of the accuracy class, for example smaller than 0.2 percent and 8 min for accuracy class 1;

b) the inaccuracy in the determination of the capacitor divider ratio, for example by measurement of each capacitance separately (capacitances of each unit and of the intermediate voltage capacitor C_2), is smaller than 20 percent of the accuracy class, for example smaller than 0.2 percent for accuracy class 1; and

c) the test according to **9.2.5** has shown that the limits of error of the accuracy class will not be surpassed as a combined effect of the burden, frequency temperature and inaccuracy mentioned under Items (a) and (b).

For more details concerning the use of the equivalent circuit, *see* Annex C.

ANNEX A

(*Clauses* 9.1.3, 9.2.3 *and* 9.2.4)

MAIN CONDITIONS ALLOWING TESTS ON THE EQUIVALENT CIRCUIT

A-1 The main condition allowing tests on the equivalent circuit according to Fig. 1 and 2 is that the relations:

$$L_1 \times C_1 = L_2 \times C_2$$

and

$$R_1 \times C_1 = R_2 \times C_2$$

are fulfilled for the capacitor dividers.

A-2 In these relations C_1, L_1 and R_1 are the capacitance, the series inductance and the series loss resistance of the high voltage capacitor C_1; and C_2, L_2 and R_2 and the corresponding values of the intermediate voltage capacitor C_2.

A-3 These relations involve the necessity that the capacitors C_1 and C_2 of the divider are of the same construction and have values of the dielectric dissipation factor which do not differ from each other by more than 3×10^{-4}.

A-4 The relations regarding the series inductances has no practical influence on most capacitor dividers having a natural frequency of 100 kHz or more.

A-5 If an additional resistance is connected in series with one of the capacitors C_1 or C_2, tests on the equivalent circuit do not give results truly representative of direct tests and, in this case, the equivalent circuit should be used with precaution.

ANNEX B

(*Clause* 9.2.4)

BURDENS FOR THE TRANSIENT RESPONSE TEST

B-1 The circuit diagrams of the two possible burdens are given in Fig. 3 and the corresponding values of their components in Table 1.

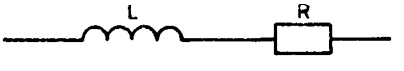

3(A) SERIES BURDEN

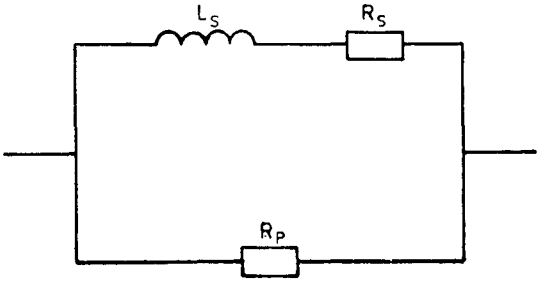

3(B) SERIES-PARALLEL BURDEN

FIG. 3 CIRCUIT DIAGRAM OF THE BURDEN FOR THE TRANSIENT RESPONSE TEST.

Table 1 Impedance Values of the Pure Series and of the Series-Parallel Burden for the Transient Response Test

(*Clause* B-1)

	Burden (a) (pure series)		Burden (b) (Series-Parallel)		
	R	WL	R_p	R_s	WL_s
100 Percent of S_n	0.8 $\lvert Z_n \rvert$	0.6 $\lvert Z_n \rvert$	2.2 $\lvert Z_n \rvert$	0.72 $\lvert Z_n \rvert$	1.25 $\lvert Z_n \rvert$
25 Percent of S_n	3.2 $\lvert Z_n \rvert$	2.4 $\lvert Z_n \rvert$	8.8 $\lvert Z_n \rvert$	2.88 $\lvert Z_n \rvert$	5 $\lvert Z_n \rvert$

where

S_n = rated burden in voltamperes.

U_n = secondary voltage in volts, such that

$$\lvert Z_n \rvert = \frac{U_n^2}{S_n} \text{ where } \lvert Z_n \rvert \text{ in ohms.}$$

NOTES

1 The total burden given by these values has a power factor of 0.8.

2 The inductive reactance should be a linear one, for example core type. The series resistance is composed of the equivalent series resistance of the inductive reactance (resistance of the winding plus equivalent series resistance of the iron losses) and of a separate resistance.

3 The error of the burden shall be less than ± 5% for Z_n and smaller than ± 0.03 for the power factor.

ANNEX C

(*Clause* 9.3.2.3)

USE OF THE EQUIVALENT CIRCUIT FOR THE ROUTINE TESTS FOR ACCURACY

C-1 In the present state of technology the equivalent circuit may be used for the routine tests for accuracy without difficulties up to class 1. For higher accuracy classes, the equivalent circuit may be used after agreement between the manufacturer and the purchaser.

C-2 The error introduced by the equivalent circuit test is a cumulative offset of the following factors.

C-2.1 Determination of the capacitor divider ratio (main cause of error) the errors being particularly caused by:

i) inaccuracy of the measurement, for example of each capacitance separately; and

ii) influence of stray capacitance.

NOTE — This influence may be reduced provided that capacitance values of C_1 and C_2 are measured on and erected capacitor divider and not on each capacitor unit separately.

C-2.2 Determination of the equivalent capacitance, as the sum of the measured capacitance of C_1 and C_2 and of the especially made equivalent capacitance if used.

NOTES

1 Present day technology for capacitance measurement gives such accuracy for the equivalent capacitance that it will add only small errors (about 1 min).

2 The use of an actual capacitor divider in the equivalent circuit may introduce errors due to the stray capacitance because of the supplementary connections.

C-2.3 Differences between the tangent of the loss angles of the capacitance C_1 and C_2 and the specially made equivalent capacitance, if used.

NOTE — A difference of the tangent of the loss angles of the capacitances (C_1 and C_2) of less than 3×10^{-4} has negligible influence.

C-2.4 Variation of the capacitance and of the dielectric dissipation factors in C_1 and C_2 due to voltage changes, especially because the voltage across the equivalent capacitance is much smaller than the normal voltages across C_2 and especially C_1.

NOTE — A sepeically made equivalent capacitance connected in the equivalent circuit operates within a small voltage range and has only small variations of capacitance and losses due to the applied voltage. The variations have therefore negligible influence on the measured errors of the capacitor voltage transformer. The equivalent capacitance shall always be exactly adjusted to the measured value of C_1 and C_2 in order to avoid the introduction of new errors according to **C-2.2** above.

Bureau of Indian Standards

BIS is a statutory institution established under the *Bureau of Indian Standards Act*, 1986 to promote harmonious development of the activities of standardization, marking and quality certification of goods and attending to connected matters in the country.

Copyright

BIS has the copyright of all its publications. No part of these publications may be reproduced in any form without the prior permission in writing of BIS. This does not preclude the free use, in the course of implementing the standard, of necessary details, such as symbols and sizes, type or grade designations. Enquiries relating to copyright be addressed to the Director (Publication), BIS.

Review of Indian Standards

Amendments are issued to standards as the need arises on the basis of comments. Standards are also reviewed periodically; a standard along with amendments is reaffirmed when such review indicates that no changes are needed; if the review indicates that changes are needed, it is taken up for revision. Users of Indian Standards should ascertain that they are in possession of the latest amendments or edition by referring to the latest issue of 'BIS Handbook' and 'Standards Monthly Additions'.

This Indian Standard has been developed from Doc: No. ETD 34 (2919)

Amendments Issued Since Publication

Amend No.	Date of Issue	Text Affected

BUREAU OF INDIAN STANDARDS

Headquarters:

Manak Bhavan, 9 Bahadur Shah Zafar Marg, New Delhi 110002
Telephones: 323 01 31, 323 33 75, 323 94 02

Telegrams: Manaksanstha
(Common to all offices)

Regional Offices:		Telephone
Central	: Manak Bhavan, 9 Bahadur Shah Zafar Marg NEW DELHI 110002	323 76 17, 323 38 41
Eastern	: 1/14 C.I.T. Scheme VII M, V.I.P. Road, Maniktola CALCUTTA 700054	337 84 99, 337 85 61 337 86 26, 337 91 20
Northern	: SCO 335-336, Sector 34-A, CHANDIGARH 160022	60 38 43 60 20 25
Southern	: C.I.T. Campus, IV Cross Road, CHENNAI 600113	235 02 16, 235 04 42 235 15 19, 235 23 15
Western	: Manakalaya, E9 MIDC, Marol, Andheri (East) MUMBAI 400093	832 92 95, 832 78 58 832 78 91, 832 78 92
Branches	: AHMADABAD. BANGALORE. BHOPAL. BHUBANESHWAR. COIMBATORE. FARIDABAD. GHAZIABAD. GUWAHATI. HYDERABAD. JAIPUR. KANPUR. LUCKNOW. NAGPUR. PATNA. PUNE. THIRUVANANTHAPURAM.	

Printed at Dee Kay Printers, New Delhi, India