STUDY MATERIAL FOR ELECTRICAL SUPERVISOR LICENSE EXAMS (DOMESTIC AND INDUSTRIAL)

Solved MCQs and Question Papers from State Electricity Board Exams for Supervisor License (Supervisor Certificate of Competency)

SUDESH K JAIN



Click to Buy
Amazon | Flipkart | Pothi Store

(Reaffirmed 2002)

भारतीय मानक

धारा ट्रांसफार्मर – विशिष्टि

भाग 3 संरक्षी धारा ट्रांसफार्मर

(दूसरा पुनरीक्षण)

Indian Standard

CURRENT TRANSFORMERS — SPECIFICATION

PART 3 PROTECTIVE CURRENT TRANSFORMERS

(Second Revision)

Third Reprint MARCH 1997

UDC 621·314·224

© BIS 1992

BUREAU OF INDIAN STANDARDS
MANAK BHAVAN, 9 BAHADUR SHAH ZAFAR MARG
NEW DELHI 110002

November 1992

Price Group 3

FOREWORD

This Indian Standard (Part 3) was adopted by the Bureau of Indian Standards, after the draft finalized by the Instrument Transformers Sectional Committee had been approved by the Electrotechnical Division Council.

This standard was first published in 1964 and revised in 1981. This revision has been undertaken to bring it in line with the latest developments at the international level.

Indian Standards on current transformers have been published in four parts:

Part 1 General requirements

Part 2 Measuring current transformers

Part 3 Protective current transformers

Part 4 Protective current transformers for special purpose applications

For obtaining an efficient protection, it is necessary that the protective current transformers should maintain the accuracy up to several times the rated current. The requirements of protective current transformers differ from measuring current transformers mainly in this respect.

This specification applies to protective current trasformers intended for use in non-balaced protective equipment, for example, for the operation of overcurrent devices both of the non-directional types and the protective current transformrrs used for the operation of earth-fault devices with time lag characteristics. When the operation of the protective equipment is more precisely dependent upon the magnitude and phase relationship of voltage and current, for example, earth-fault protection in resonant earthed networks, or upon the balance of current, for example, instantaneous earth-fault protection and differential protection, the current transformers may require characteristics other than those prescribed in this specification. In such case, the designer of the protective system should specify the additional requirements that may be necessary.

In the preparation of this standard, assistance has been derived from the following:

IEC Pub 185 (1987) Current Transformers, published by International Electrotechnical Commission.

BS 3938 : 1973 Specification for Current Transformers with latest amendments; published by British Standards Institution.

For the purpose of deciding whether a particular requirement of this standard is complied with the final value, observed or calculated, expressing the result of a test or analysis, shall be rounded off in occordance with IS 2 : 1960 'Rules for rounding off numerical values (*revised*)'. The number of significant places retained in the rounded off value should be the same as that of the specified value in this standard.

Indian Standard

CURRENT TRANSFORMERS — SPECIFICATION

PART 3 PROTECTIVE CURRENT TRANSFORMERS

(Second Revision)

1 SCOPE

This standard (Part 3) gives the specific requirements and tests for protective current transformers used with electrical protective devices (relays/trip coils). It also covers the protective cores of multi-core current transformers.

2 TERMINOLOGY

2.0 For the purpose of this standard, the following definitions shall apply in addition to those covered in Part 1 of this standard.

2.1 Protective Current Transformer

A current transformer intended to supply protective devices (relays/trip coils).

2.2 Composite Error

Under steady state conditions, the rms value of the difference between:

a) the instantaneous values of the primary current, and

b) the instantaneous values of the actual secondary current multiplied by the rated transformation ratio.

The positive signs of the primary and secondary currents are corresponding to the convention for terminal markings.

The composite error E_c is generally expressed as a percentage of the rms values of the primary current according to the formula:

$$E_c = \frac{100}{I_p}\sqrt{\frac{1}{T}\int_0^T (K_n . i_s - i_p)^2 \, dt}$$

where

K_n = rated transformation ratio,

I_p = rms value of the primary current,

i_p = instantaneous value of the primary current,

i_s = instantaneous value of the secondary current, and

T = duration of one cycle.

2.3 Accuracy Limit Factor

The ratio of the rated accuracy limit primary current to the rated primary current.

2.3.1 *Rated Accuracy Limit Factor*

The value of the accuracy limit factor for which the accuracy requirements of this specification are met at rated burden.

2.3.2 *Rated Accuracy Limit Primary Current*

The value of the highest primary current up to which the transformer will comply with the specified limits of composite error. It is the product of the rated primary current and the rated accuracy limit factor.

2.4 Secondary Limiting emf

The product of the accuracy limit factor, the rated secondary current and the vectorial sum of the rated burden and the impedance of the secondary winding.

2.5 Exciting Current

The rms value of the current taken by the secondary winding of a current transformer when a sinusoidal voltage of rated frequency is applied to the secondary terminals, the primary and any other windings being open-circuited.

3 ACCURACY LIMIT FACTOR

The standard accuracy limit factors shall be 5, 10, 15, 20 and 30.

4 ACCURACY CLASS

The accuracy class shall be designated by the highest permissible percentage composite error at the rated accuracy limit primary current prescribed for the accuracy class concerned, followed by the letter "P" (meaning protection).

4.1 Standard Accuracy Classes

The standard accuracy classes for protective current transformers shall be 5P, 10P and 15P.

NOTE — Protective current transformers are designated by accuracy class followed by the accuracy limit factor (for example 5P10).

5 LIMITS OF ERRORS

5.1 The current error, composite error and the phase displacement at the rated frequency and with rated burden connected, shall not exceed the values given in Table 1.

Table 1 Limits of Errors
(*Clause* 5.1)

Accuracy Class	Current Error at Rated Primary Current (Percent)	Phase Displacement at Rated Primary Current (Minutes)	Composite Error at Rated Accuracy Limit Primary Current (Percent)
(1)	(2)	(3)	(4)
5P	±1	±60	5
10P	±3	—	10
15P	±5	—	15

6 MARKING

6.1 The following particulars shall be marked in addition to those required in Part 1 of this standard:

Rated accuracy limit factor shall be indicated following the corresponding output and accuracy class (for example, 30 VA Class 5P10 or 30/5P10).

6.2 In case of current transformers required to meet combination of output and accuracy classes, the necessary information should be given.

7 TESTS

Accuracy test for current error and phase displacement and for composite error shall be carried out both as type test and routine test.

7.1 Type Test

7.1.1 *Current Error and Phase Displacement*

Test shall be made to prove compliance with **5.1** with respect to the current error and phase displacement.

7.1.2 *Composite Error*

7.1.2.1 *Direct test*

Compliance with the limit of composite error given in **5.1** shall be demonstrated by a direct test, in which a substantially sinusoidal current equal to the rated accuracy limit primary current is passed through the primary winding, with the secondary winding connected to the rated burden. The composite error may be determined as given in Annex A (*see* **A-5** and **A-6**).

NOTE — The distance of the return primary conductor from the current transformer shall be taken into account from the point of view of reproducing service conditions.

7.1.2.2 *Indirect test*

For low reactance current transformers (*see* **A-9**), the direct test given in **7.1.2.1** may be replaced by the following indirect test provided that the effect of return conductor is negligible.

With the primary winding open circuited, the secondary winding is energized at rated frequency by a substantially sinusoidal voltage having an rms value equal to the secondary limiting emf. The resulting exciting current expressed as a percentage of the rated secondary current multiplied by the accuracy limit factor shall not exceed the limit of composite error given in **5.1** (*see also* **A-7**).

NOTES
1 In calculating the secondary limiting emf used above, the secondary winding impedance shall be assumed to be equal to the secondary winding resistance measured at room temperature and corrected to 75°C.

2 In determining the composite error by the indirect method, a possible difference between turns ratio and rated transformation ratio need not be taken into account.

7.1.3 For the determination of ratio error and phase displacement in accordance with **7.1.1**, the burden shall have a power factor of 0.8 lagging except that when it is less than 5 VA, power factor of unity is permissible. For the determination of composite error in accordance with **7.1.2**, the burden shall have a power factor between 0.8 lagging and unity at the discretion of the manufacturer.

7.2 Routine Tests

7.2.1 *Current Error and Phase Displacement*

This test shall be carried out as given in **7.1.1**.

7.2.2 *Composite Error*

7.2.2.1 For low reactance current transformers, the routine test shall be as given in **7.1.2.2**.

7.2.2.2 For other current transformers, the test may be made by the indirect method given in **7.1.2.2**. In such cases, a correction factor shall be applied to the results. This correction factor is obtained from a comparative test between the indirect and the direct methods of test and the results of such test shall be held available by the manufacturer.

NOTE — The correction factor is equal to the ratio of the composite error obtained from the direct method (*see* **7.1.2.1**) and the exciting current expressed as a percentage of the rated secondary current mutliplied by the accuracy limit factor, as determined by the indirect method (*see* **7.1.2.2**).

ANNEX A

(*Clause* 7.1.2.1)

NOTES ON PROTECTIVE CURRENT TRANSFORMERS

A-1 VECTOR DIAGRAM

A-1.1 Considering a current transformer where the turns ratio (number of secondary turns to number of primary turns) is equal to the rated transformation ratio, and idealized to the extent that it contains only linear electric and magnetic components in itself and in its burden, and further assuming a sinusoidal primary current, all the currents, voltages, and fluxes will be sinusoidal and the performance of the current transformer can be described in vector diagram, such as Fig. 1.

A-1.2 In Fig. 1, I_s represents the secondary current. It flows through the impedance of the secondary winding and through the burden which determines the magnitude and direction of the necessary induced voltage E_s, and of the flux which is prependicular to the voltage vector. This flux is maintained by the exciting current I_e having a magnetizing component I_m parallel to the flux, and a loss component I_i parallel to the voltage vector. The vector sum of the secondary current and the exciting current (I_s + I_e) is the vector I_p" representing the primary current divided by the turns ratio (number of secondary turns to number of primary turns).

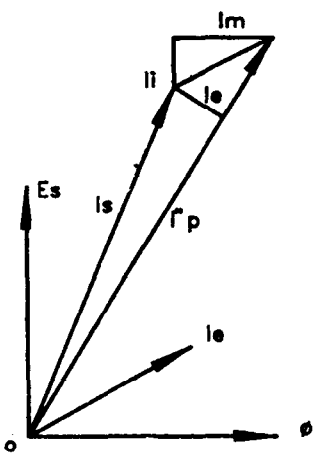

FIG. 1 VECTOR DIAGRAM OF CURRENT TRANSFORMERS

A-1.3 Thus, for a current transformer with turns ratio equal to the rated transformation ratio, the difference in the lengths of the vectors I_s and I_p", related to the length of I_p", is the current error and the angular difference is the phase displacement according to 3.13 and 3.14 respectively of Part 1 of this standard.

A-2 TURNS CORRECTION

A-2.1 When there is a difference between the actual turns ratio and the rated transformation ratio the current transformer is said to have turns correction.

A-2.2 Turns correction may be intentional, accidental (for example, if the number of turns is so great that an accurate check is difficult) or it may be unavoidable (for example, if the rated transformation ratio is not rational, as in the case where it is a multiple of $\sqrt{3}$).

A-2.3 In evaluating the current transformer performance I_p', the primary current divided by the rated transformation ratio, and I_p", the primary current divided by the turns ratio has to be distinguished. Absence of turns correction means I_p' is equal to I_p".

A-2.4 If intentional turns correction is present, we have I_p' less than I_p" and since it is I_p" that goes into the vector diagram and I_p' is used for the determination of the ratio error, it is seen that turns correction will have an influence on the ratio error (and may be deliberately used with that purpose). However, the vectors I_p' and I_p" have the same direction so that turns correction has no influence on phase displacement. It is also apparent that turns correction has only a partial influence on composite error.

A-3 ERROR TRIANGLE

A-3.1 In Fig. 2, the upper part of Fig. 1 is redrawn to a larger scale and under further assumption that the phase displacement is so small that for practical purposes the two vectors, I_s and I_p" may be considered parallel. Assuming again that there is no turns correction, it may be seen by projecting I_e on to I_p" that with a good approximation, the in-phase component of I_e (ΔI) instead of the arithmetic difference between I_p" and I_s may be used when the ratio error is to be found, and likewise the quadrature component of I_e (ΔI_q) may be used to express the phase displacement.

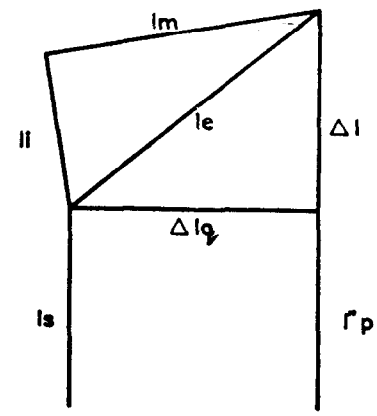

FIG. 2 ERROR TRIANGLE OF CURRENT TRANSFORMERS

A-3.2 It is further seen that under the given assumptions the exciting current I_e divided by I_p" is equal to the composite error according to 2.2. Thus, for a current transformer without turns correction and under conditions where a vector representation is justifiable, the ratio error, the phase displacement, and the composite error form a right-angled triangle.

A-3.3 In this triangle, the hypotenuse representing the composite error is proportional to the magnitude of the total burden impedance consisting of burden and secondary winding, while the division between

current ratio and phase displacement depends upon the power factors of the total burden impedance and of the exciting current. Zero phase displacement will result when these two power factors are equal, that is when I_s and I_e are in phase.

A-4 COMPOSITE ERROR

A-4.1 The most important application, however, of the concept of composite error is under conditions where a vector representation cannot be justified because non-linear conditions introduce higher harmonics in the exciting current and in the secondary current (*see* Fig. 3).

It is for this reason that the composite error is defined as in **2.2** and not in the far simpler way as the vector sum of ratio error and phase displacement as shown in Fig. 2.

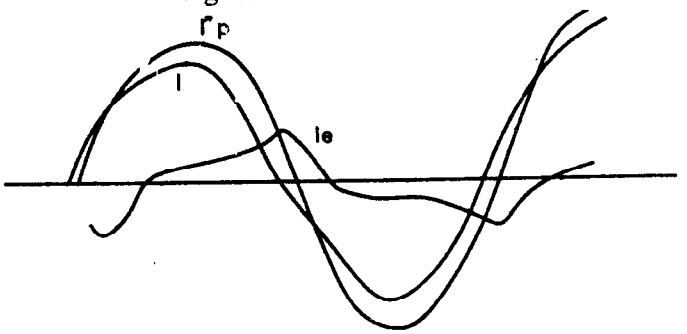

FIG. 3 CONCEPT OF COMPOSITE ERROR

A-4.2 Thus, in the general case, the composite error also represents the deviations from the ideal current transformer that are caused by the presence, in the secondary winding, of higher harmonics which do not exist in the primary. The primary current is always considered sinusoidal for the purpose of this standard.

A-5 DIRECT TEST FOR COMPOSITE ERROR

A-5.1 A current transformer having a turns ratio 1:1 is shown in Fig. 4. It is connected to a source of primary (sinusoidal) current, a secondary burden with linear characteristics, and to an ammeter in such a manner that both the primary and the secondary current pass through the ammeter, but in opposite directions. In this manner the resultant current through the ammeter will be equal to the exciting current under the prevailing conditions of sinusoidal primary current and the rms value of that current, related to the rms value of the primary current, is the composite error according to the definition in **2.2**.

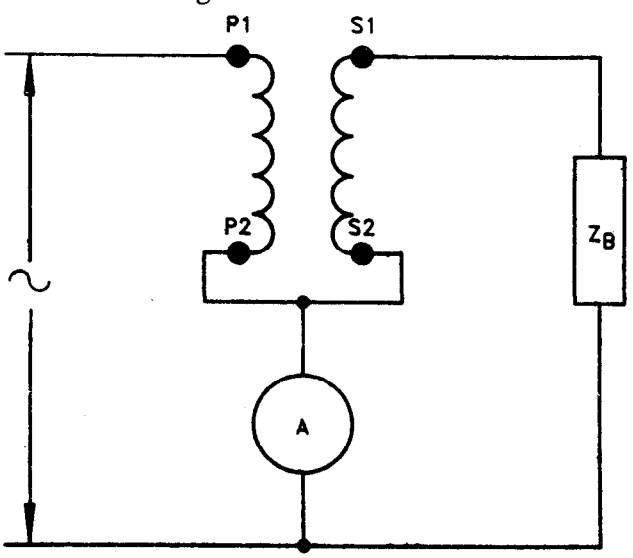

FIG. 4 BASIC CIRCUIT FOR THE DIRECT MEASUREMENT OF COMPOSITE ERROR

A-5.2 Figure 4, therefore, represents the basic circuit for the direct measurement of composite error.

A-5.3 Two current transformers having the same rated transformation ratio are shown in Fig. 5. The current transformer marked N is assumed to have no (or negligible) composite error under the prevailing conditions (minimum burden), while the other current transformer marked X is connected to its rated burden.

They are both fed from the same source of primary sinusoidal current and an ammeter is connected to measure the difference between the two secondary currents. Under these conditions the rms value of the current through the ammeter A_2, related to the rms value of the primary current in ammeter A_1, is the composite error of the transformer X.

NOTE — The ammeter A_2 in Fig. 5 should have an impedance of not more than 0.1 ohm for a 5-ampere current transformer, a..d not more than 2.5 ohms for a 1-ampere current transformer. This is to ensure that there is minimum effect of the ammeter on the actual composite error of the current transformer under test.

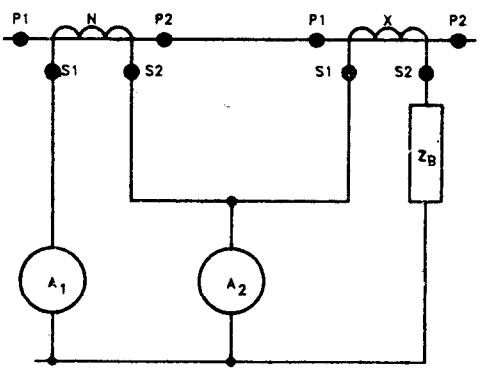

FIG. 5 MEASUREMENT OF COMPOSITE ERROR WITH THE USE OF AN AUXILIARY CURRENT TRANSFORMER

A-5.3.1 The measurement is further simplified if a ratio meter is used as shown in Fig. 6. This ratio meter

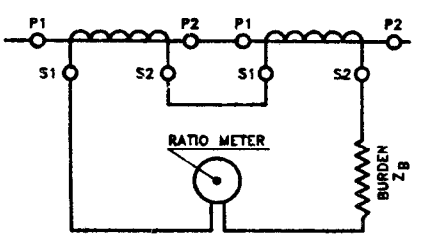

FIG. 6 USE OF RATIO METER FOR THE MEASUREMENT OF COMPOSITE ERROR

reads directly the ratio of the rms spill current and rms primary current.

A-5.4 Figure 5, therefore, represents the practical circuit for the direct measurement of the composite error for current transformers having rated transformation ratios differing from unity. For the use of this method, it is, however, necessary that the composite error of transformer N is truly negligible. It is not sufficient that the transformer N has a known composite error, for it is not possible to correct the results accordingly. The reason for this is that while the composite error is expressed simply by a numerical value, it is in fact of a highly complicated nature.

A-6 ALTERNATIVE METHOD FOR THE DIRECT MEASUREMENT OF COMPOSITE ERROR

A-6.1 Composite error of current transformers may be measured by an alternative method as shown in Fig. 7.

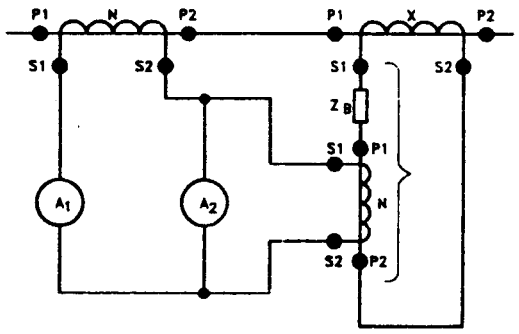

FIG. 7 ALTERNATIVE METHOD FOR THE DIRECT MEASUREMENT OF COMPOSITE ERROR

A-6.2 While the method described for the measurement of composite error for current transformer in Fig. 5 requires a special reference current transformer N of the same rated transformation ratio as the transformer *X* and having negligible composite error at the accuracy limit primary current, the alternative method as shown in Fig. 7 enables standard reference current transformer *N* and *N'* to be used at or about their rated primary currents. It is still essential, however, that these reference transformers should have negligible compsite error.

A-6.3 In Fig. 7, *X* is the current transformer under test, *N* is a standard reference transformer with a rated primary current of the same order of magnitude as the rated accuracy limit primary current of current transformer *X*, and *N* is a standard reference transformer having a rated primary current of the order of magnitude of the secondary current corresponding to the rated accuracy limit primary current of transformer *X*. It should be noted that the transformer *N'* constitutes a part of the burden Z_b of transformer *X* and must, therefore, be taken into account in determining the value of the burden Z_B. A_1 and A_2 are two ammeters and care should be taken that A_2 measures the difference between the secondary currents of transformer *N* and *N'*.

A-6.4 If the rated transformation ratio of transformer *N* is *Kn*, of transformer *A* is *Knx* and of transformer *N'* is *K'n* the ratio *Kn* should equal the product of *k'n* and *Knx*, that is *Kn* = *K'n*. *Knx*.

A-6.5 Under these conditions the rms value of the current in ammeter A_2, related to the current in ammeter A_1, is the composite error of transformer *X*.

A-6.6 While using the methods shown in Fig. 5 and 7, great care should be taken to use a lower impedance instrument for ammeter A_2, since the voltage across this ammeter (divided by the ratio of transformation of *N'* in the case of Fig. 7) constitutes part of the burden voltage of transformer *X* and tends to reduce the burden on this transformer. Similarly, this ammeter voltage increases the burden on transformer *N*.

A-6.7 In order to carry out the test as described in any of the direct methods, the primary winding may be required to carry a high current for the duration of the test. This may cause damage or destruction of the winding or the adjacent insulation. If the effect of the return primary conductor is negligible, the test may be carried out on a prototype in which :

a) the accuracy limit primary ampere turns are the same;

b) the geometrical arrangement of the primary with respect to the cores and secondary windings is the same;

c) the magnetic materials and the secondary windings are identical; and

d) the insulation may be reduced and/or changed.

A-7 INDIRECT TEST FOR COMPOSITE ERROR

A-7.1 Under the conditions of Fig. 4. where the primary current is sinusoidal, the direct measurement of the composite error is in practice equivalent to measuring the exciting current under these conditions. In particular, it should be noted that the secondary voltage is not sinusoidal.

A-7.2 The definition of exciting current according to **2.5** however, presumes a sinusoidal secondary voltage.

A-7.3 It has been shown that under certain conditions (as mentioned in **A-9**) the rms value of these two kinds of exciting currents are almost alike, and consequently the indirect test for the determination of composite error is acceptable. The applied voltage should preferably be measured by a rectifier-operated moving coil voltmeter indicating 1.11 times the mean value and the exciting current should be measured by an instrument for measuring rms values.

A-7.4 In those cases where these symmetrical conditons are not fulfilled, there exists, nevertheless, a relation between the results obtained by the two methods

of determining the composite error. Once this relation has been established for a certain type of transformer (preferably with no turns correction) for a given burden, and for a given accuracy limit factor, then this relation may be used in the routine determination of the composite error by the indirect method as mentioned in **7.2.2.2.**

A-8 USE OF COMPOSITE ERROR

A-8.1 The numerical value of the composite error will always be larger than the vector sum of ratio error and the phase displacement. The composite error consequently is always a true expression for the maximum value of ratio error or phase displacement. When the power factor of the total load is known, the error triangle may be used for an estimate of the ratio error (of particular interest, for example overload relays), and of the phase displacement (of particular interest for phase-sensitive relays, for example, directional relays). For differential relays, the sum of the composite errors of the current transformers involved is always a conservative estimate of the maximum error.

A-8.2 For burdens between 50 percent and 100 percent of the rated burden, it is usually conservative to estimate the composite error proportionally lower, but no estimate can be made for greater burdens.

A-8.3 An additional advantage of a limitation of composite error is the resulting limitation of the harmonic content of the secondary current which is necessary for the correct operation of certain types of relays.

A-9 DETERMINATION OF LOW REACTANCE TYPE CURRENT TRANSFORMER

A-9.1 Protective Current Transformers may be established to be of low reactance in any of the ways described below.

A-9.1.1 All current transformers are of low reactance if:

a) The core is of the jointless ring type (including spirally wound cores);

b) The secondary turns are substantially evenly distributed along the whole length of the magnetic circuit;

c) The primary conductor(s) passes through the approximate centre of the core aperture or is approximately evenly distributed along the whole length of the magnetic circuit.

d) Flux equalizing windings, where employed to meet the requirements of design, consist of at least four parallel connected coils, evenly distributed along with whole length of the magnetic circuit, each coil occupying one quadrant.

Such an arrangement ensure substantially even flux distribution within the core irrespective of the presence of stray flux which may result from such conditions as the close proximity of the return primary conductor.

A-9.1.2 Alternatively, any current transformer may be shown to be of low reactance by a type test comprising the determination of the composite error of the current transformer by the direct test and comparing it to the composite error determined by the indirect test. If the composite error obtained by the direct test is less than 1.3 times the error obtained by the indirect test, the current transformer shall be accepted as of low reactance. However, since in the case of Class PS current transformers (*see* Part 4) which must be of low reactance, there is no rated burden and accuracy limit current, the burden and primary current for the direct test, and the voltage to be applied to the secondary winding for the indirect test, should be agreed between the manufacturer and the purchaser.

Bureau of Indian Standards

BIS is a statutory institution established under the *Bureau of Indian Standards Act*, 1986 to promote harmonious development of the activities of standardization, marking and quality certification of goods and attending to connected matters in the country.

Copyright

BIS has the copyright of all its publications. No part of these publications may be reproduced in any form without the prior permission in writing of BIS. This does not preclude the free use, in the course of implementing the standard, of necessary details, such as symbols and sizes, type or grade designations. Enquiries relating to copyright be addressed to the Director (Publication), BIS.

Review of Indian Standards

Amendments are issued to standards as the need arises on the basis of comments. Standards are also reviewed periodically; a standard along with amendments is reaffirmed when such review indicates that no changes are needed; if the review indicates that changes are needed, it is taken up for revision. Users of Indian Standards should ascertain that they are in possession of the latest amendments or edition by referring to the latest issue of 'BIS Handbook' and 'Standards Monthly Additions'.

This Indian Standard has been developed from Doc: No. ETD 34 (3389)

Amendments Issued Since Publication

Amend No.	Date of Issue	Text Affected

BUREAU OF INDIAN STANDARDS

Headquarters:

Manak Bhavan, 9 Bahadur Shah Zafar Marg, New Delhi 110002
Telephones: 323 01 31, 323 33 75, 323 94 02

Telegrams: Manaksanstha
(Common to all offices)

Regional Offices:		Telephone
Central	: Manak Bhavan, 9 Bahadur Shah Zafar Marg NEW DELHI 110002	323 76 17, 323 38 41
Eastern	: 1/14 C.I.T. Scheme VII M, V.I.P. Road, Maniktola CALCUTTA 700054	337 84 99, 337 85 61 337 86 26, 337 91 20
Northern	: SCO 335-336, Sector 34-A, CHANDIGARH 160022	60 38 43 60 20 25
Southern	: C.I.T. Campus, IV Cross Road, CHENNAI 600113	235 02 16, 235 04 42 235 15 19, 235 23 15
Western	: Manakalaya, E9 MIDC, Marol, Andheri (East) MUMBAI 400093	832 92 95, 832 78 58 832 78 91, 832 78 92
Branches	: AHMADABAD. BANGALORE. BHOPAL. BHUBANESHWAR. COIMBATORE. FARIDABAD. GHAZIABAD. GUWAHATI. HYDERABAD. JAIPUR. KANPUR. LUCKNOW. NAGPUR. PATNA. PUNE. THIRUVANANTHAPURAM.	

Printed at Dee Kay Printers, New Delhi, India