STUDY MATERIAL FOR ELECTRICAL SUPERVISOR LICENSE EXAMS (DOMESTIC AND INDUSTRIAL)

Solved MCQs and Question Papers from State Electricity Board Exams for Supervisor License (Supervisor Certificate of Competency)

SUDESH K JAIN



Click to Buy
Amazon | Flipkart | Pothi Store

भारतीय मानक

पॉवर ट्रांसफार्मर

भाग 2 तापमान वृद्धि

(पहला पुनरीक्षण)

Indian Standard

POWER TRANSFORMERS

PART 2 TEMPERATURE-RISE

(First Revision)

ICS 29-180

© BIS 2010

B U R E A U O F I N D I A N S T A N D A R D S
MANAK BHAVAN, 9 BAHADUR SHAH ZAFAR MARG
NEW DELHI 110002

April 2010

Price Group 7

SUNSHINE GRAPHICS: 2009_85

Power Transformers Sectional Committee, ETD 16

FOREWORD

This Indian Standard (Part 2) (First Revision) was adopted by the Bureau of Indian Standards, after the draft finalized by the Power Transformers Sectional Committee had been approved by the Electrotechnical Division Council.

This standard was first published in 1977 and revised to bring it in line with the revision of IEC Pub 76 (1967) 'Power transformers'.

The normal temperature-rise limits in oil immersed transformers are modified as per Indian conditions.

This standard is published in 8 parts. Other parts in this series are:

Part 1	General
Part 3	Insulation levels and dielectric tests
Part 4	Terminal markings, tappings and connections
Part 5	Ability to withstand short circuit
Part 7	Loading guide for oil-immersed power transformers
Part 8	Application guide
Part 10	Determination of sound levels

For the purpose of deciding whether a particular requirement of this standard is complied with, the final value, observed or calculated, expressing the result of a test or analysis, shall be rounded off in accordance with IS 2 : 1960 'Rules for rounding off numerical values (*revised*)'. The number of significant places retained in the rounded off value should be the same as that of the specified value in this standard.

Indian Standard

POWER TRANSFORMERS

PART 2 TEMPERATURE-RISE

(First Revision)

1 SCOPE

This standard (Part 2) identifies transformers according to their cooling methods, defines temperature-rise limits and details the methods of test for temperature-rise measurements. It also applies to transformers as defined in the scope of IS 2026 (Part 1) 'Power transformers: Part 1 General (*second revision*)'.

2 REFERENCES

The standards given in Annex A are necessary adjuncts to this standard.

3 IDENTIFICATION SYMBOLS ACCORDING TO COOLING METHOD

Transformers shall be identified according to the cooling method employed. For oil-immersed transformers this identification is expressed by a four-letter code as described below. Corresponding codes for dry-type transformers are given in IS 11171.

a) **First Letter** — Internal cooling medium in contact with the windings:

   1) O : mineral oil or synthetic insulating liquid with fire point 'Cleveland open-cup' test method {*see* IS 1448 [P : 69]};
   2) K : insulating liquid with fire point 'Cleveland open-cup' test method {*see* IS 1448 [P : 69]}; and
   3) L : insulating liquid with no measurable fire point.

b) **Second Letter** — Circulation mechanism for internal cooling medium:

   1) N : natural thermosiphon flow through cooling equipment and in windings;
   2) F : forced circulation through cooling equipment, thermosiphon flow in windings; and
   3) D : forced circulation through cooling equipment, directed from the cooling equipment into at least the main windings.

c) **Third Letter** — External cooling medium:

   1) A : air; and
   2) W : water.

d) **Fourth Letter** — Circulation mechanism for external cooling medium:

   1) N : natural convection; and
   2) F : forced circulation (fans, pumps).

NOTE — In a transformer designated as having forced directed oil circulation (second code letter D), the rate of oil flow through the main windings is determined by the pumps and is not, in principle, determined by the loading. A minor fraction of the flow of oil through the cooling equipment may be directed as a controlled bypass to provide cooling for core and other parts outside the main windings. Regulating windings and/or other windings having relatively low power may also have non-directed circulation of bypass oil.

In a transformer with forced, non-directed cooling, on the other hand (second code letter F), the rates of flow of oil through all the windings are variable with the loading, and not directly related to the pumped flow through the cooling equipment.

A transformer may be specified with alternative cooling methods. The specification and the nameplate shall then carry information about the power figures at which the transformer fulfils the temperature-rise limitations when these alternatives apply [*see* **7.1** of IS 2026 (Part 1)]. The power figure for the alternative with the highest cooling capacity is the rated power of the transformer or of an individual winding of a multi-winding transformer [*see* **4.1** of IS 2026 (Part 1)]. The alternatives are conventionally listed in rising order of cooling capacity.

Examples:

1) ONAN/ONAF — The transformer has a set of fans which may be put in service as desired at high loading. The oil circulation is by thermosiphon effect only in both cases.
2) ONAN/OFAF — The transformer has cooling equipment with pumps and fans but is also specified with a reduced power-carrying capacity under natural cooling (for example, in case of failure of auxiliary power).

4 TEMPERATURE-RISE LIMITS

4.1 General

Temperature-rise limitations for transformers are specified according to different options.

a) A set of requirements apply which refer to continuous rated power. These requirements are given in **4.2**.

b) When explicitly specified, an additional set of requirements is imposed which is related to a specified loading cycle. This procedure is described in **4.4**. It is applicable mainly to large system transformers for which emergency loading conditions deserve particular attention, and should not be regularly used for small and medium-size standardized transformers.

It is assumed in this standard that the service temperatures of different parts of a transformer can each be described as the sum of a cooling medium temperature (ambient air or cooling water) and a temperature-rise of the transformer part.

The cooling medium temperature and the altitude (with regard to cooling air density) are characteristic of the installation site. When normal service conditions in these respects prevail [*see* **2.1** of IS 2026 (Part 1)], then normal values of temperature-rise for the transformer will result in allowable service temperatures.

The values of temperature-rise are characteristics of the transformer which are subject to guarantees and to tests under specified conditions. Normal temperature-rise limits apply unless the enquiry and contract indicate unusual service conditions. In such cases the limits of temperature-rise shall be modified as indicated in **4.3**.

No plus tolerance is permitted on temperature-rise limits.

4.2 Normal Temperature-Rise Limits at Continuous Rated Power

When a transformer has a tapped winding with a tapping range exceeding ±5 percent then the temperature-rise limits shall apply to every tapping at the appropriate tapping power, tapping voltage and tapping current [*see* **5.6** of IS 2026 (Part 1)]. The load losses are different for different tappings and sometimes also the no-load losses, namely within tapping ranges where variable flux voltage variation is specified. If a temperature-rise type test is to be made on such a transformer it will, unless otherwise specified, be carried out on the 'maximum current tapping' [*see* **5.3** of IS 2026 (Part 1)].

For a multi-winding transformer, the temperature-rise requirements refer to rated power in all windings simultaneously, if the rated power of one winding is equal to the sum of the rated powers of the other windings. If this is not the case, one or more particular loading combinations have to be selected and specified for the temperature-rise test (*see* **5.2.3**).

In transformers with concentric winding arrangement, two or more separate windings may be situated one above the other. In this case, the winding temperature limit shall apply to the average of the readings for the stacked windings, if they are of equal size and rating. If they are not, the evaluation shall be subject to agreement.

The temperature-rise limits given below are valid for transformers with solid insulation designated as 'Class A' according to and immersed in mineral oil or synthetic liquid with fire point not above 300°C (first code letter: O).

Temperature-rise limits of transformers which have a more temperature-resistant insulation system and/or are immersed in a less flammable liquid (code letter K or L) are subject to agreement.

Temperature-rise limits for dry-type transformers with different insulation systems are given in IS 11171.

The following limits for temperature-rise in oil-immersed transformers (code letter O) are referred to steady state under continuous rated power. They are valid only when normal service conditions with regard to cooling apply (*see* **4.3.1**):

	External Cooling Medium	
	Air	Water
Top oil temperature rise 60 K (*see* **5.3.1**)	50°C	55°C

Average winding temperature-rise [by resistance measurement (*see* **5.4**)]:

a) For transformers identified as ON or OF — 55°C : 60°C

b) For transformers identified as OD..— 60°C : 65°C

No numerical limits are specified for the temperature- rise of the core, of electrical connections outside the windings or of structural parts in the tank. It is a self-evident requirement, however, that such parts shall not reach temperatures which will cause damage to adjacent parts or undue ageing of the oil. For large transformers this may be investigated by special testing (*see* Annex B).

NOTE — In a separate-winding transformer, the maximum current tapping is normally the tapping with the highest load loss. In an auto-transformer with tappings, the choice of tapping for the temperature-rise test will be dependent on how the tappings are arranged.

4.3 Modified Requirements Because of Unusual Service Conditions

If the service conditions at the intended installation site do not fall within the limits of normal service conditions, then the limits of temperature-rise for the transformer shall be modified accordingly.

Rules for dry-type transformers are given in **2.2** of IS 11171.

4.3.1 *Oil-Immersed, Air-Cooled Transformers*

Normal ambient temperature limits (–25°C and +40°C) for power transformers are given in **2.1** of IS 2026 (Part 1). With regard to cooling of air-cooled transformers the temperature conditions at the intended installation site should neither exceed,

a) +40°C monthly average, of the hottest month; nor
b) +32°C yearly average.

If the temperature conditions at site exceed one of these limits, the specified temperature-rise limits for the transformer shall all be reduced by the same amount as the excess. The figures shall be rounded to nearest whole numbers of degrees.

If the installation site is more than 1 000 m above sea-level but the factory is not, then the allowable temperature-rise during the test in the factory shall be reduced as follows:

a) *For a naturally cooled transformer (.. AN)*, the limit of average winding temperature rise shall be reduced by 1 K for every interval of 400 m by which the installation's altitude exceeds 1 000 m.
b) *For a forced-cooled transformer (.. AF)*, the reduction shall be 1 K for every 250 m.

A corresponding reverse correction may be applied in cases where altitude of the factory is above 1 000 m and the altitude of the installation site is below 1 000 m.

Any altitude correction shall be rounded to the nearest whole number of degree.

When the specified temperature-rise limits of a transformer have been reduced, either because of high cooling medium temperature or because of high-altitude installation, this shall be indicated on the rating plate [*see* **7.2** of IS 2026 (Part 1)].

NOTES

1 The average temperatures are to be derived from meteorological data as follows [*see* **3.12** of IS 2026 (Part 1)]:

a) *Monthly average temperature*, half the sum of the average of the daily maxima and the average of the daily minima during a particular month, over many years;
b) *Yearly average temperature*, one-twelfth of the sum of the monthly average temperatures.

2 When standardized transformers are to be applied at high altitudes, a reduced figure of power may be calculated, which from the point of view of cooling and temperature-rise corresponds to service with rated power under normal ambient conditions.

4.3.2 *Oil-Immersed, Water-Cooled Transformers*

Normal cooling water temperature is, according to **2.1** of IS 2026 (Part 1) not above +25°C. If the cooling water temperature exceeds this limit, the specified temperature-rise limits for the transformer shall all be reduced by the same amount as the excess. The figures shall be rounded to the nearest whole number of degrees.

The influence of differing ambient temperature or altitude on the air cooling of the tank is disregarded.

4.4 Temperature-Rise During a Specified Load Cycle

If guarantees and/or a special test regarding a load cycle are to be specified, this shall involve the following parameters:

a) Initial temperature condition of the transformer, either at ambient temperature or with steady-state temperature-rises corresponding to a specified fraction of rated current (preload);
b) Magnitude of the test current (constants), expressed as a multiple of rated current, and its duration;
c) Maximum permissible temperature-rise values for top oil and winding average (by resistance) at the termination of the test. This statement is optional. The test may be executed for information only, without any limits being agreed on beforehand; and
d) Any special observations or measurements to be performed, for example direct hot-spot temperature measurements, thermal imaging of tank-wall heating, and possible limitations in relation to them.

For further recommendations and discussion regarding load cycle studies — particularly measurements and evaluation (*see* **B-4**).

5 TEST OF TEMPERATURE-RISE

5.1 General

This clause describes the procedures for determination of temperatures and temperature-rise values during factory testing and also the methods for substituting service loading by equivalent test procedures.

This clause gives requirements for the testing of both oil-immersed and dry-type transformers, as applicable.

During the temperature-rise test, the transformer shall be equipped with its protective devices (for example, Buchholz relay on an oil-immersed transformer). Any indication during the test shall be noted.

5.1.1 *Cooling-Air Temperature*

Precautions should be taken to minimize variations of cooling-air temperature, particularly during the later part of a test period when a steady state is approached. Rapid variation of readings due to turbulence should be prevented by appropriate means such as heat sinks of suitable time constant for the temperature sensors. At least three sensors shall be used. The average of their readings shall be used for the evaluation of the test. Readings should be taken at regular intervals, or automatic continuous recording may be used.

The sensors shall be distributed around the tank, 1 m to 2 m away from tank or cooling surfaces, and protected from direct heat radiation. Around a self-cooled transformer, the sensors shall be placed at a level about halfway up the cooling surfaces.

A forced-air-cooled transformer shall have the sensors placed so as to record the true temperature of the air taken into the coolers. Attention shall be paid to possible recirculation of hot air. The test object should be placed so as to minimize obstructions to the air flow and to provide stable ambient conditions.

5.1.2 *Cooling-Water Temperature*

Precautions should be taken to minimize variation of cooling-water temperature during the test period. The temperature is measured at the intake of the cooler. Readings of temperature and rate of water flow should be taken at regular intervals, or automatic continuous recording may be used.

5.2 Test Methods for Temperature-Rise Determination

5.2.1 *General*

For practical reasons, the standard method for determination of the steady-state temperature-rise of oil-immersed transformers on the test floor is the equivalent test in short-circuit connection according to **5.2.2**.

Alternatively it may be agreed, in special cases, to perform a test with approximately rated voltage and current by connection to a suitable load. This is mainly applicable to transformers with low rated power.

A 'back-to-back' method may also be agreed. In this method, two transformers, one of which is the transformer under test, are connected in parallel and excited at the rated voltage of the transformer under test. By means of different voltage ratios or an injected voltage, rated current is made to flow in the transformer under test.

Procedures applicable to dry-type transformers are described in IS 11171.

5.2.2 *Test to Steady State by Short-Circuit Method*

During this test the transformer is not subjected to rated voltage and rated current simultaneously, but to the calculated total losses, previously obtained by two separate determinations of losses, namely load loss at reference temperature, and no-load loss [*see* **10.4** and **10.5** of IS 2026 (Part 1)].

The purpose of the test is twofold,

- — to establish the top oil temperature-rise in steady-state condition with dissipation of total losses; and
- — to establish the average winding temperature-rise at rated current and with the top oil temperature rise as determined above.

This is achieved in two steps:

a) *Total loss injection* — First the top oil and average oil temperature-rises are established when the transformer is subjected to a test voltage such that the measured active power is equal to the total losses of the transformer [*see* **3.6**, **10.4** and **10.5** of IS 2026 (Part 1)]. The test current will be above rated current to the extent necessary for producing an additional amount of loss equal to the no-load loss, and the winding temperature rise will be correspondingly elevated.

The oil temperature and cooling medium temperature are monitored, and the test is continued until a steady-state oil temperature rise is established.

The test may be terminated when the rate of change of top oil temperature-rise has fallen below 1 k/h and has remained there for a period of 3 h. If discrete readings have been taken at regular intervals, the mean value of the readings during the last hour is taken as the result of the test. If continuous automatic recording is applied, the average value during the last hour is taken.

b) *Rated current injection* — When the top oil temperature rise has been established, the test shall immediately continue with the test current reduced to rated current for the winding combination connected (for a multi-winding transformer, *see* **5.2.3**). This condition is maintained for 1 h, with continuous observation of oil and cooling medium temperatures.

At the end of the 1 h, the resistances of the windings are measured, either after a rapid disconnection of the supply and short circuits (*see* **5.5**, **D-2** and **D-3**) or, without switching off the supply, by means of the superposition method which consists of injecting into the winding a dc measuring current of low value superimposed on the load current.

The values of average temperature of the two windings are determined from the resistances, according to **5.4**.

During the period with rated current the oil temperature falls. The measured values of winding temperature shall therefore be raised by the same amount as the average oil temperature-rise has fallen from the correct value, obtained according to procedure **5.2.2** (a). The corrected winding temperature value minus the cooling medium temperature at the end of the total losses injection period is the winding average temperature-rise.

By agreement, the two steps of the test may be combined in one single application of power at a level between load loss and total loss. The temperature-rise figures for the top oil and for the windings shall then be determined using the correction rules of **5.6**. The power injected during the test shall however be at least 80 percent of the total losses figure.

NOTES

1 If the time constant of the oil temperature-rise is no more than 3 h the truncation error of this procedure will be negligible. Alternative truncation rules are given in Annex D.

2 The use of a superimposed dc current for the measurement of winding resistances is described in IS 13226.

3 With regard to calculation of temperatures under variable loading, it is convenient to regard the winding temperature rise as the sum of two terms: the average oil temperature rise (above cooling medium temperature) plus the difference between average winding and average oil temperatures (*see* **5.6**, **B-2** and **B-3**).

5.2.3 *Test Modification for Particular Transformers*

Two-winding transformer with tapping range larger than ±5 percent.

Unless otherwise specified, the temperature-rise test is conducted with the transformer connected on the maximum current tapping [*see* **5.3** of IS 2026 (Part 1)] and the tapping current for that tapping is used during the later part of the test [*see* **5.2.2** (b)].

The total losses to be injected during the first part of the test [*see* **5.2.2** (a)], shall be equal to the highest value of total loss appearing at any tapping (corresponding to its tapping quantities). This tapping is also often, but not always, the maximum current tapping. This part of the test determines the maximum top oil temperature-rise. For the determination of winding temperature-rise at the maximum current tapping, the figure of oil temperature-rise to be used in the evaluation shall correspond to the total losses of that tapping. The value from the first part of the test will be re-calculated, if obtained with other data.

5.2.3.1 *Multi-winding transformer*

For the first part of the test a total loss shall be developed which corresponds to rated power (or tapping power) in all windings, if the rated power of one winding is equal to the sum of the rated powers of the other windings.

If this does not apply, there are specified loading cases with different combinations of individual winding loads. That case which will be associated with the highest total loss shall determine the test power for the determination of oil temperature-rise.

The temperature-rise figure for an individual winding above oil shall be obtained with rated current in the winding.

In the determination of winding temperature-rise above ambient, the oil temperature-rise for the relevant loading case will be re-calculated from the total loss injection test, according to **5.6**, and likewise the winding temperature-rise above oil for each winding, as applicable.

Guidance for the recalculation of losses in multi-winding transformers is given in IS 10561.

The injection of total loss for determination of oil temperature-rise may be made,

a) either in a manner as near as possible to the actual loading case, by injecting the current corresponding to the total losses in one winding, the other ones being simultaneously short-circuited or connected to an impedance; and

b) or in an approximate manner by not short-circuiting or closing certain windings; for example if one of the windings has a relatively low rated power and low contribution to the total loss of the transformer, it may be acceptable to leave it open and raise the current in the other windings concerned until the correct total loss is obtained.

If none of the methods above can be applied in full, because of limitations of test facilities, it may be agreed to perform the test with reduced loss, down to 80 percent of the correct value. Then the measured temperature value shall be corrected according to **5.6**.

The details of the temperature-rise test for a multi-winding transformer should, as a rule, be presented and agreed already at the tender stage.

5.3 Determination of Oil Temperatures

5.3.1 *Top Oil*

The top oil temperature is determined by one or more sensors immersed in the oil in the top of the tank, in pockets in the cover, or in headers leading from the tank to separate radiators or coolers. The use of several sensors is particularly important on large transformers, and their readings shall be averaged in order to arrive at a representative temperature value.

NOTE — The temperature of the oil may be different at different places in the top of the tank, depending on the design. Measurements using a pocket in the cover may be disturbed by eddy current heating of the cover. In transformers with forced circulation of oil to the cooling equipment there is a mixture of oil from the windings with bypass oil in the tank, which may not be uniform between different parts of the tank or between different cooling-circuit headers. Concerning the significance of top oil temperature in transformers with forced circulation (*see also* Annex C).

5.3.2 *Bottom Oil and Average Oil*

Bottom oil is the term which actually means the (temperature of) oil entering the windings at the bottom. For practical reasons it is identified with the temperature of the oil returning from the cooling equipment to the tank. Average oil is a concept used for correction of certain temperature-rise test results (*see* **5.2.2** and **5.6**). It is also used in the mathematical model for prediction of temperatures in service under specific load, constant or variable (*see* Annex B).

The bottom oil temperature is determined by sensors fitted in the return headers from coolers or radiators. If several batteries of cooling equipment are fitted, more than one sensor should be used.

The average oil temperature shall, in principle, be the average temperature of the cooling oil in the windings. For the purpose of test evaluation, it is conventionally taken as the average between the top oil temperature and the bottom oil temperature, determined as described above.

NOTES

1 The flow of oil in return headers may be turbulent, if forced by a pump, or mainly laminar, if there is natural circulation through the radiators. This is of importance for a representative determination of the oil temperature in the header.

2 For ONAN transformers up to 2 500 kVA, with plain or corrugated tanks or individual cooling tubes mounted directly on the tank, the average oil temperature-rise above ambient air temperature may be taken as 80 percent of the top oil temperature-rise.

3 For purposes other than test evaluation, the average oil temperature may be determined differently (*see* Annex C).

5.4 Determination of Average Winding Temperature

The average winding temperature is determined *via* measurement of winding resistance. In a three-phase transformer the measurement should preferably be associated with the middle limb. The ratio between the resistance value R_2 at temperature θ_2 (°C), and R_1 at θ_1 is taken as:

A reference measurement (R_1, θ_1) of all winding resistances is made with the transformer at ambient temperature, in a steady-state condition [*s*` ` *ee* **10.2.3** of IS 2026 (Part 1)]. When the resistance R_2 at a different temperature is measured, this yields the temperature value:

The external cooling medium temperature at the time of shutdown is θ_a.

The winding temperature rise is then, finally:

$$\Delta\theta_w = \theta_2 - \theta_a$$

When the winding resistance is measured after disconnection of the power supply and the short-circuit connection, the resistance value R_2, immediately before shutdown, shall be determined in accordance with **5.5**.

5.5 Determination of Winding Temperature Before Shutdown

The temperature-rise test (*see* **5.2.2**), requires that the average winding temperature immediately before shutdown shall be determined. The standard method is as follows:

Immediately after disconnection of the test power supply and removal of the short-circuiting connection, a dc measuring circuit is connected across the phase windings to be measured. The windings have a large electrical time constant, l/*r*.

Accurate readings are, therefore, obtained only after a certain delay. The resistance of the winding varies with time as the winding cools down. It shall be measured for a sufficient time to permit extrapolation back to the instant of shutdown.

Recommendations for the detailed execution of the measurement, and alternative methods which may be used to advantage in particular cases are given in Annex D.

In order to obtain as correct a result as possible, the cooling conditions should be disturbed as little as possible while resistance measurements are conducted. This problem, in relation to forced-cooled oil-immersed transformers, is discussed further in Annex C.

5.6 Corrections

If the specified values of power or current have not been obtained during the test, the result shall be corrected according to the following relations. They are valid within a range of ±20 percent from target value of power and ±10 percent from target value of

current. By agreement they may be applied over a wider range (*see* **B-2**).

The oil temperature-rise above ambient during the test is multiplied by:

x = 0.8 for distribution transformers (natural cooling, maximum rated power 2 500 kVA).

x = 0.9 for larger transformers with ON.. cooling.

x = 1.0 for transformers with OF.. or OD.. cooling.

The average winding temperature-rise above average oil temperature during the test is multiplied by:

y = 1.6 for ON.. and OF.. cooled transformers.

y = 2.0 for OD.. cooled transformers.

ANNEX A
(*Clause* 2)

LIST OF REFERRED INDIAN STANDARDS

IS No.	*Title*
1448 [P : 69] : 1969	Methods of test for petroleum and its products : [P : 69] Flash and five point by cleveland (open) cup.
2026 (Part 1) : 2008	Power transformers: Part 1 General (*second revision*)
6600 : 1972	Guide for loading of oil immersed transformers
10561 : 1983	Application guide for power transformers
11171 : 1985	Specification for dry-type power transformers
13226 : 1991	Automotive Vehicles — Resistances in starter motor circuits — Methods of measurement.

ANNEX B
(*Clauses* 4.2, 4.4, 5.2.2, 5.3.2 *and* 5.6)

TRANSIENT LOADING — MATHEMATICAL MODEL AND TESTING

B-1 GENERAL

The result from a temperature-rise test to steady state, according to **5.2**, may be used for an estimate of steady-state temperature-rise at a different loading, and also for an estimate of transient temperature-rise (if the thermal time-constants of the transformer are known).

For small and medium-size transformers such estimates are performed according to a conventional mathematical model which is described in **B-2** and **B-3**.

The validity of this model for any particular large transformer is, however, not so certain as for transformers of lower rated power. When loadability analysis is to be performed, for example, concerning emergency loading above rated power, it is advisable to obtain relevant data for the actual transformer. One way is to conduct special testing with transient load in excess of rated power. Recommendations for a suitable test procedure and for the associated measurements and observations are presented in **B-4**.

B-2 MATHEMATICAL MODEL FOR TEMPERATURE DISTRIBUTION IN A WINDING OF AN OIL-IMMERSED TRANSFORMER — THE HOT-SPOT CONCEPT

Cooling oil enters the bottom of the winding and is at bottom oil temperature. It passes upwards through the winding and its temperature is assumed to rise linearly with the height. The winding losses are transferred from the winding to the oil all along the winding. This heat transfer requires a temperature drop between winding and surrounding oil which is assumed to be the same at all levels of height. In the graphic presentation (*see* Fig. 1), the winding temperature and the oil temperature will therefore appear as two parallel lines.

The maximum temperature occurring in any part of the winding insulation system is called the hot-spot temperature. This parameter is assumed to represent the thermal limitation of loading of the transformer.

As a general rule other parts of the transformer, for example, bushings, current transformers or tapchangers, should be selected so as not to represent any narrower restriction of the loadability of the transformer [*see* **4.2** of IS 2026 (Part 1)].

Towards the upper end of the winding there is usually a concentration of Eddy current losses and the winding may be provided with extra electrical insulation which increases the thermal insulation. The actual local temperature difference between conductor and oil is therefore assumed to be higher by the hot-spot factor.

This factor is assumed to be from 1.1 in distribution transformers to 1.3 in medium size power transformers. In large transformers there is considerable variation depending on design, and the manufacturer should be consulted for information, unless actual measurements are carried out (*see* **B-4**).

The steady-state temperature difference between winding and oil, average along the winding, is taken as the difference between (resistance-measured winding average temperature) and [average oil temperature (*see* **5.3** and **5.4**)], respectively.

The steady-state hot-spot temperature-rise above external cooling medium temperature (air or water) is the sum of (top oil temperature-rise above cooling medium temperature) and (hot-spot factor) × (average temperature difference winding-to-oil).

In transformers with forced non-directed oil flow (code OF..) the concepts of top oil temperature and average oil temperature are ambiguous as long as they are based only on measurements according to **5.3** and **5.4** (*see* Annex B).

Measured values of steady-state temperature-rises at a specific loading are used to calculate corresponding rises at a different loading by means of the exponents given in **5.6**. These are typical values, subject to variation depending on the design, and valid with some accuracy only within limited ranges of loading variation. Clause **5.6** imposes rather narrow limits for the purpose of evaluation of test results subject to guarantees. For estimates with moderate requirements of accuracy, the exponents may give useful results over wider ranges.

B-3 VARIABLE LOADING OR COOLING THERMAL TIME-CONSTANTS

When the loading varies, or when the intensity of a forced cooling is changed, the temperatures of winding and oil will follow with some delay. This is conventionally described by two time-constants. One of these reflects the calorimetric heat capacity of the complete transformer (where the heat capacity of the mass of oil plays a dominant part). This is generally of the order of 1 h to 5 h; shorter for large, compact, forced-cooled transformers, and longer for naturally cooled transformers. The other time-constant is shorter, of the order of 5 min to 20 min, and reflects how the temperature difference between winding and oil responds to changes of dissipated loss.

Under variable conditions the winding temperature-rise above the cooling air or water temperature is expressed

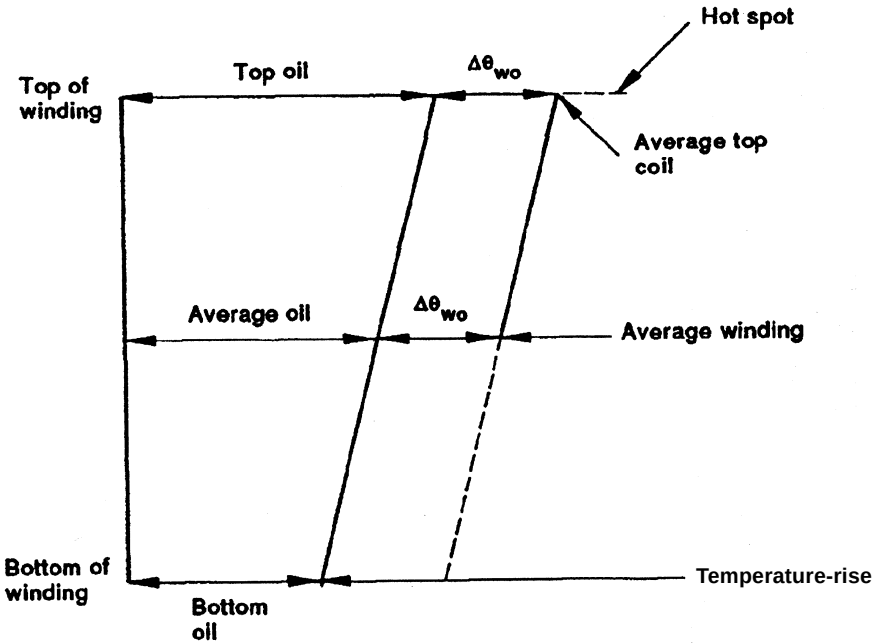

FIG. 1 TEMPERATURE DISTRIBUTION MODEL

as the sum of an oil temperature-rise, subject to the long time-constant, and a winding-above-oil temperature-rise, subject to the short time-constant. Mathematical expressions for the transient temperature variation with time are presented in IS 6600.

Mathematical models for dry-type transformers are presented in IS 11171.

B-4 RECOMMENDATIONS FOR TEMPERATURE-RISE TEST WITH TRANSIENT LOAD

As outlined in **4.4** of this part it may be agreed to perform temperature-rise testing with loading above rated current for a limited time duration. Such a test may, for example, be intended to simulate a peak load period during a day of emergency service.

A recommended test loading consists of a constant current, suitably expressed in per unit of rated current, and with a specified duration, after which the test current is switched off. The test is run in short-circuit connection in the same way as the test to steady state at rated loading (The specified load current value may be selected to include an allowance for no-load loss).

Calculations regarding actual load cycles may be performed for example according to the guidance given in IS 6600, to verify the approximate equivalence of the simplified test load cycle in terms of maximum temperatures. It shall be specified whether the test shall start with the whole transformer at test-floor ambient temperature, or in a temperature condition corresponding to steady state at a specified pre-load current, again suitably expressed as a fraction of rated current.

Temperature sensors should be fitted to at least the same extent as that required for a temperature-rise test to steady state. The temperatures of oil and windings (average, by resistance), at the time of shutdown, are determined by standard methods.

Additional temperature sensors inside the transformer tank may be used as agreed. If sensors are installed inside the winding system in an effort to record winding hot-spot temperature, it is advisable to utilize several sensors at the same time. This is because the precise location of the hottest spot is not generally known beforehand. Local temperatures may vary from point to point, and also with time, depending on random variation of oil flow. It is also to be recognized that actual measured, local temperatures in a large transformer may deviate considerably from estimates according to the conventional mathematical models. Unless earlier experience from measurements on similar designs is available, the studies are to be regarded as exploratory investigations. Great caution is recommended regarding the possible specification of temperature limits beforehand.

Monitoring of local temperatures of the tank and of electrical terminations by means of infrared camera technique may be carried out in order to reduce the risk of damage during the test. Monitoring of temperature of structural metal parts inside by means of temporarily installed sensors may serve the same purpose. Gas-in-oil analysis before and after the test is a diagnostic method for hidden overheating (*see* **D-4**).

ANNEX C
(*Clauses* 5.3.1, 5.3.2 *and* 5.5)

NOTE ON OIL TEMPERATURE IN TRANSFORMERS WITH FORCED OIL CIRCULATION

C-1 In an ON.. transformer, the steady-state volume rate of flow of oil through the windings is in principle equal to the rate of flow through the radiators. In general, the same holds for a genuine OD.. transformer where only a moderate leakage or controlled bleed passes from the coolers out into the free tank volume. Conditions are different, on the other hand, in an OF.. transformer with non-directed flow through the windings.

In an OF.. transformer, the full pump capacity has to be sufficient to satisfy the maximum flow rate through the windings even under some limited overloading. Under rated load and part load there is therefore a considerable surplus rate of flow through the coolers which is shunted outside the windings, in the tank. The shunted oil slowly rises, with unchanged temperature, up to the level where the hot oil from the top of the windings is ejected.

This hot stream of oil mixes in a turbulent way with the cooler, shunted oil in the tank. The volume from the winding outlet level to the top of the tank is filled with a mix having a relatively homogeneous temperature, lower than the temperature of the oil leaving the top of the winding.

Conventional measurement of the top oil temperature will show this mixed oil temperature. If the measurement is used for determination of average oil temperature in the winding, and of the temperature difference between winding and oil, the results are unrealistic and can be misleading, if used for hot-spot temperature calculation and loadability studies.

An alternative method for the determination of oil temperature in the winding is sometimes referred to as 'extrapolated mean oil. According to this method the monitoring of average winding temperature by resistance measurement after shutdown of the temperature-rise test is continued for some additional time. The rate of change of the resistance decays in the course of 5 min to 20 min. As there is no further loss dissipation in the winding, its temperature will approach the temperature of the surrounding oil. It has then been tacitly assumed that the average oil temperature can be regarded as unchanged (or falling only slowly in step with the temperature of the whole volume of oil in the transformer). This assumption is unfounded. For some designs the method gives quite unrealistic results.

There is, as a matter of fact, no universal and reliable method to determine surrounding oil temperature in an OF.. transformer based only on measurements external to the winding.

In **5.5**, it is pointed out that the cooling conditions should be disturbed as little as possible while winding temperature measurements are carried out after shutdown. Before shutdown the free volume of oil around the windings has bottom oil temperature. The winding takes its oil at this temperature. The coolers receive oil from a volume of mixed oil in the top of the tank, above the winding oil exit.

After disconnection of the test power, the circulation of oil may continue in different ways:

a) If the pump circulation and fan ventilation are continued, the coolers continue to draw mixed oil and deliver oil with bottom oil temperature to the tank. Successively, the mixed oil temperature starts to go down, and the bottom oil temperature follows in step;

b) If the pump circulation is continued but the fans are stopped, the coolers will deliver oil with almost top oil temperature to the bottom of the tank from where it will rise and mix with the free oil around the windings; and

c) If both pumps and fans are stopped, the winding continues to supply hot oil to the top of the tank. The demarcation level between top oil and bottom oil starts to sink below the level of the oil exit from the winding. This successively changes the thermal head of the oil in the tank outside the winding and influences the updrift of oil inside the winding.

In general it is preferred to keep both pumps and fans operating, but the differences in test results between the different possibilities are, indeed, not important when compared with the large uncertainty of the oil temperature distribution in the winding as described above.

ANNEX D

(*Clauses* 5.2.2, 5.5 *and* B-4)

TECHNIQUES USED IN TEMPERATURE-RISE TESTING OF OIL-IMMERSED TRANSFORMERS

D-1 TRUNCATION OF A TEST TO STEADY STATE

List of symbols

θ	:	Temperature, in °C
$\theta(t)$	:	Oil temperature, varying with time (this may be top oil, or average oil)
θ_a	:	External cooling medium temperature (ambient air or water) assumed to be constant
$\Delta\theta$	:	Oil temperature rise above θ_a
θ_u, $\Delta\theta_u$	:	Ultimate values in steady state
$\varepsilon(t)$	:	Remaining deviation from steady-state value θ_u
T_o	:	Time constant for exponential variation of bulk oil temperature rise
H	:	Time interval between readings
θ_1, θ_2, θ_3	:	Three successive temperature readings with time interval h between them.

In principle, the test should continue until the steady-state temperature-rise (of the oil) is ascertained. The ambient air temperature, or cooling water temperature, should be kept as constant as possible. It is assumed that the oil temperature q(t) will approach an ultimate

value θ_u along an exponential function with a time constant T_o. The ambient temperature is θ_a. The ultimate oil temperature rise is $\Delta\theta_u$.

$$\theta_u = \theta_a + \Delta\theta_u \quad \ldots (1)$$

$$\theta(t) = \theta_a + \Delta\theta_u (1 - e^{-t/To}) \quad \ldots (2)$$

The remaining deviation from steady state is then:

$$\varepsilon(t) = \theta_u - \theta(t) = \Delta\theta_u \times e^{-t/To} \quad \ldots (3)$$

Values of ε at equal intervals of time will form a geometric series. This permits a graphical extrapolation procedure according to Fig. 2.

For any two consecutive points on the curve, with a separation in time of h hours:

$$\Delta(\Delta\theta)_t = e_{t-h} - e_t = e_t \left(e^{h/T_o} - 1\right) \quad \ldots (4)$$

$$\varepsilon_t = \frac{\Delta(\Delta\theta)_t}{e^{h/T_o} - 1} \quad \ldots (4a)$$

At any later time $(t + t_1)$:

$$e_{(t+t_1)} = e_t e^{-t_1/T_o} = \frac{\Delta(\Delta q)_t}{e^{t_1/T_o}\left(e^{h/T_o} - 1\right)} \quad \ldots (5)$$

The conventional criterion for truncation is to observe when the rate of change of temperature has fallen below 1 K/hour, for example:

h = 1 and $\Delta(\Delta\theta)$ t

Equation (4a) gives

$$\varepsilon_t < \left(e^{1/T_o} - 1\right)^{-1}$$

The test should then continue for 3 h and may then be interrupted. The average temperature rise during the last hour is taken as the result of the test. With T_o = 3 h this theoretically leads to a truncation error of about 1 K. If the time constant is shorter the error is smaller and *vice-versa.*

The time constant T_o may be estimated in different ways.

The following formula is based on information available on the transformer rating plate:

$$T_o = \frac{5 \times [\text{Total mass}] + 15 \times [\text{Mass of oil}]}{\text{Total loss}} \times \left(\frac{\Delta\theta_u}{60}\right) h \quad \ldots (6)$$

where

masses are, in tonne and loss is, in kilowatt; and

$\Delta\theta_u$ = estimated ultimate top oil temperature-rise.

The mass of the oil in the conservator should be subtracted from the total mass of oil — it does not take part in the changes of temperature.

An experimental estimation of the time constant in the course of the test may be made from successive temperature readings at equal time intervals h.

Given three successive readings $\Delta\theta_1$, $\Delta\theta_2$ and $\Delta\theta_3$, if the exponential relation, equation (2), is a good approximation of the temperature curve, then the increments will have the following relation:

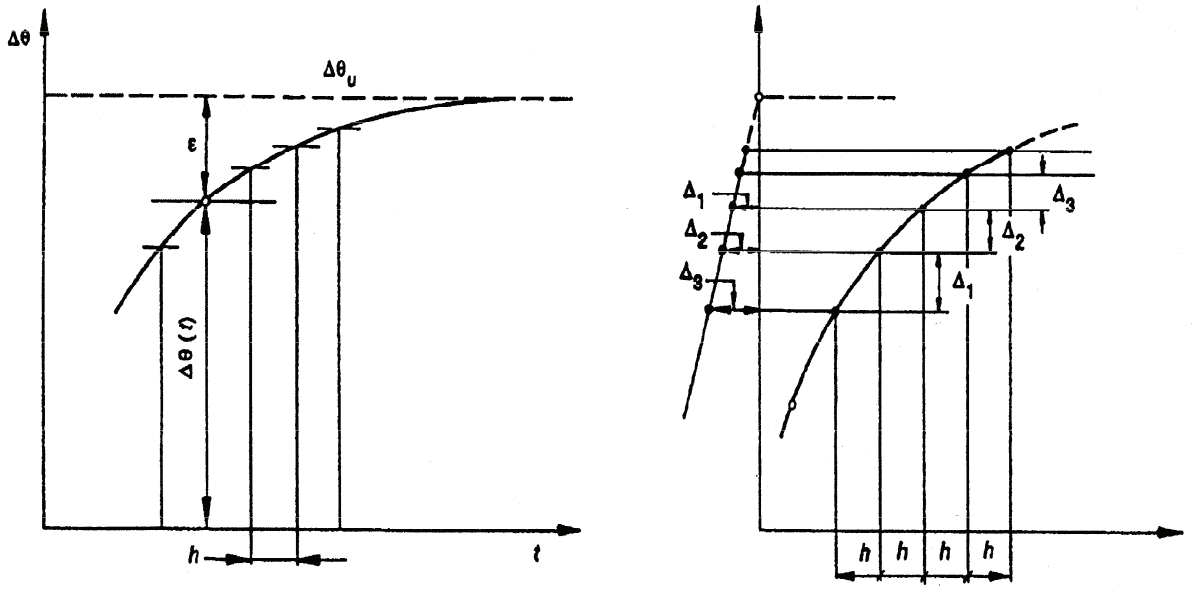

FIG. 2 GRAPHICAL EXTRAPOLATION TO ULTIMATE TEMPERATURE RISE

$$\frac{\Delta\theta_2 - \Delta\theta_1}{\Delta\theta_3 - \Delta\theta_2} = e^{h/T_o}$$

$$T_o = \frac{h}{\ln\frac{\Delta\theta_2 - \Delta\theta_1}{\Delta\theta_3 - \Delta\theta_2}} \quad ...(7)$$

The readings also permit a prediction of the final temperature-rise:

$$\Delta\theta_u = \frac{(\Delta\theta_2)^2 - \Delta\theta_1\Delta\theta_3}{2\Delta\theta_2 - \Delta\theta_1 - \Delta\theta_3} \quad ...(8)$$

Successive estimates are to be made and they should converge. In order to avoid large random numerical errors the time interval h should be approximately T_o and $\Delta\theta_3/\Delta\theta_u$ should be not less than 0.95.

A more accurate value of steady-rate temperature-rise is obtained by a least square method of extrapolation of all measured points above approximately 60 percent of $\Delta\theta_u$ ($\Delta\theta_u$ estimated by the three point method).

A different numerical formulation is:

$$\Delta\theta_u = \Delta\theta_2 + \frac{\sqrt{(\Delta\theta_2 - \Delta\theta_1) - (\Delta\theta_3 - \Delta\theta_2)}}{\ln\frac{\Delta\theta_2 - \Delta\theta_1}{\Delta\theta_3 - \Delta\theta_2}} \quad ...(9)$$

D-2 PROCEDURE FOR WINDING RESISTANCE MEASUREMENT AFTER SHUTDOWN

Clause **5.5** indicates that the temperature of the winding at the end of the test to steady state will normally be determined by measurement of the winding resistance. The measurement is commenced after shutdown of the test power and reconnection of the windings from the ac test power source to the dc measuring current source.

The winding temperature and its resistance vary with time; and the problem is to extrapolate backwards in time to the instant of shutdown. This extrapolation procedure is discussed in **D-3**.

Resistance measurement is commenced as soon as possible after the connection of the windings to the measuring equipment. In the beginning the readings are false because of the inductive voltage drop in the winding, before the dc measuring current is stabilized. The necessary time for this stabilization is reduced by,

a) driving the core into saturation so that the effective inductance drops down from a high no-load value to a value of the same order of magnitude as the short-circuit inductance; and

b) using a constant-current supply. An electronically stabilized supply source or a powerful battery with a large additional series resistor.

Driving the core into saturation means building up a certain amount of flux (dimension: Volt × Second). The use of high e.m.f in the circuit therefore reduces the delay — in practice to the order of a few seconds.

The two windings of the tested pair may either be connected to two separate dc circuits or connected in series to one in common. In both cases, the current directions are to co-operate for the saturation of the core.

The electrical time-constant of the dc circuit, after saturation is reached, may also be brought down to the order of a few seconds, even in difficult cases. A temperature difference of 1 K corresponds to a relative difference of resistance in the order of 1/300, which, for an exponential decay of the error, would correspond to a delay of five to six times the electrical time constant. This all means that useful measurements should be obtainable within not more than 1 min after effective saturation has been established.

There are also other methods in use for special cases. One is to pick up the inductive component of voltage across a different winding which is open, and not part of the dc current circuit, and use this voltage for correction of the voltage across the winding subjected to resistance measurement.

When two well-balanced, parallel halves of a winding are available, it is possible to circulate a dc current into one and back through the other. This permits monitoring of the resistance, in principle without inductive effects, and possibly even while ac power is supplied to the transformer.

D-3 EXTRAPOLATION OF WINDING TEMPERATURE TO THE INSTANT OF SHUTDOWN

Clause **D-2** of discusses the dc supply circuit for resistance measurement and the delay before the inductive effects have died away.

The instrumentation used for the measurement may be for manual reading or for automatic recording, analogue or digital. A considerable number of discrete readings are obtained over a period of, say 20 min, and these have to be evaluated for the extrapolation backwards in time to the instant of shutdown.

A plot of the readings would look as Fig. 3. It indicates that the temperature of the winding varies relatively rapidly for a period of a few minutes and then flattens out.

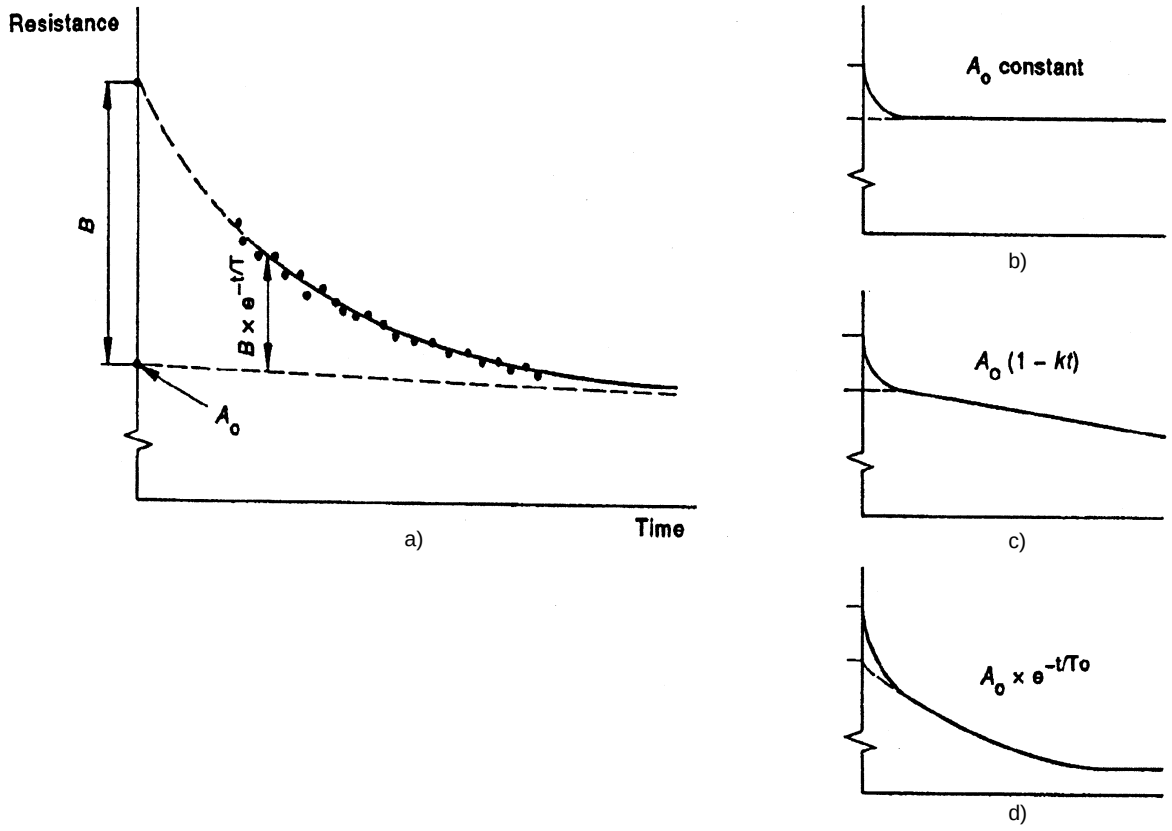

NOTE — a) — The initial part of the record, with the rapid temperature decay.
b), c), d) — Alternative mathematical models for the following, slow decay.

FIG. 3 EVALUATION OF WINDING RESISTANCE VARIATION AFTER SHUTDOWN

In a transformer with large thermal time-constant for oil-temperature variation (this applies mainly to ON. transformers of relatively low rated power) it may be assumed that the asymptote is a constant value.

In other cases (particularly when large transformers with forced cooling are tested, and the cooling equipment is left operating after test power shutdown (*see* Annex B), it may be necessary to recognize a falling asymptote, on which the more rapid initial variation is superimposed. Figure 3 illustrates this.

The evaluation will suitably be performed using a numerical computer procedure, which fits an analytical function to the set of readings. The discussion below only illustrates general principles.

The variation of the resistance R with time t is interpreted as a combination of a fixed or slowly varying term A and another term showing an exponential decay from a value B with a time-constant T:

$$R(t) = A(t) + B \times e^{-t/T} \qquad \ldots (10)$$

For the first term, a constant, a linear decay, or an exponential decay may be used:

$$A = A_o \quad A = A_o(1 - kt) \; A = A_o \times e^{-t/To} \qquad \ldots (11)$$

The measurements are conducted for a length of time such that the second term has practically died away. Parameter A_o or A_o and k, or A_o and T_o can then be estimated well enough from the latter part of the record.

After this has been done, the rapid exponential variation is isolated by putting:

$$R(t) = R(t) - A(t) = B \times e^{-t/T} \qquad \ldots (12)$$

To the set of values (R_i, t_i), the parameters B and T are determined by some numerical regression procedure.

The result of the estimate is then:

$$R(0) = A_o + B \qquad \ldots (13)$$

from which the average temperature of the winding is calculated according to **5.4**.

A conventional graphical extrapolation procedure for the same purpose uses a manually smoothed plot. Intercepts are made at equal intervals of time, starting from the instant of shutdown. The resistance differences should form a geometric series, if the decay

curve is exponential. A sloping line in the graph is fitted, as shown in Fig. 4. This line tends to the intersection corresponding to parameter A_o (*see* Fig. 4) and, at the other end, permits a graphical estimate of R_o as well.

D-4 GAS-IN-OIL ANALYSIS

A chromatographic analysis of dissolved gases in the oil may be used to advantage in order to detect possible local overheating which will not show up as abnormal temperature-rise figures during the test.

Such analysis is in general capable of indicating mild overheating of windings or structural parts, say, 170°C to 200°C, or serious local overheating, say 300°C to 400°C, for example, an unintentional contact carrying circulating eddy current.

Gas-in-oil analysis is particularly recommended for large transformers, as stray flux effects are a potential risk factor increasing with size.

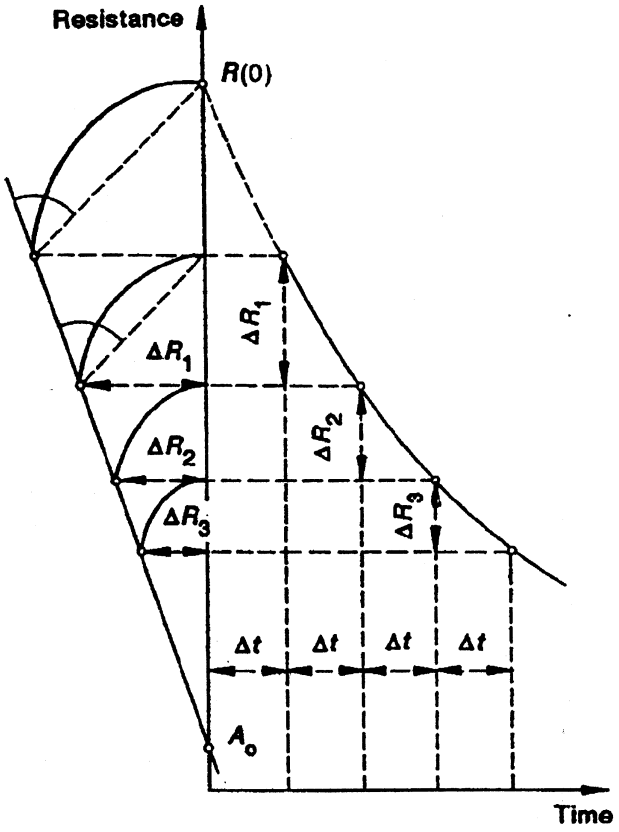

FIG. 4 GRAPHICAL EXTRAPOLATION TO RESISTANCE VALUE AT SHUTDOWN

Bureau of Indian Standards

BIS is a statutory institution established under the *Bureau of Indian Standards Act*, 1986 to promote harmonious development of the activities of standardization, marking and quality certification of goods and attending to connected matters in the country.

Copyright

BIS has the copyright of all its publications. No part of these publications may be reproduced in any form without the prior permission in writing of BIS. This does not preclude the free use, in the course of implementing the standard, of necessary details, such as symbols and sizes, type or grade designations. Enquiries relating to copyright be addressed to the Director (Publications), BIS.

Review of Indian Standards

Amendments are issued to standards as the need arises on the basis of comments. Standards are also reviewed periodically; a standard along with amendments is reaffirmed when such review indicates that no changes are needed; if the review indicates that changes are needed, it is taken up for revision. Users of Indian Standards should ascertain that they are in possession of the latest amendments or edition by referring to the latest issue of 'BIS Catalogue' and 'Standards : Monthly Additions'.

This Indian Standard has been developed from Doc No.: ETD 16 (6059).

Amendments Issued Since Publication

Amend No.	Date of Issue	Text Affected

BUREAU OF INDIAN STANDARDS

Headquarters:

Manak Bhavan, 9 Bahadur Shah Zafar Marg, New Delhi 110 002
Telephones : 2323 0131, 2323 3375, 2323 9402 *Website*: www.bis.org.in

Regional Offices: *Telephones*

Central : Manak Bhavan, 9 Bahadur Shah Zafar Marg, NEW DELHI 110002 — 2323 7617, 2323 3841

Eastern : 1/14 C.I.T. Scheme VII M, V. I. P. Road, Kankurgachi, KOLKATA 700054 — 2337 8499, 2337 8561, 2337 8626, 2337 9120

Northern : SCO 335-336, Sector 34-A, CHANDIGARH 160022 — 60 3843, 60 9285

Southern : C.I.T. Campus, IV Cross Road, CHENNAI 600113 — 2254 1216, 2254 1442, 2254 2519, 2254 2315

Western : Manakalaya, E9 MIDC, Marol, Andheri (East), MUMBAI 400093 — 2832 9295, 2832 7858, 2832 7891, 2832 7892

Branches: AHMEDABAD. BANGALORE. BHOPAL. BHUBANESHWAR. COIMBATORE. DEHRADUN. FARIDABAD. GHAZIABAD. GUWAHATI. HYDERABAD. JAIPUR. KANPUR. LUCKNOW. NAGPUR. PARWANOO. PATNA. PUNE. RAJKOT. THIRUVANANTHAPURAM. VISAKHAPATNAM.

Laser Typeset by Sunshine Graphics