STUDY MATERIAL FOR ELECTRICAL SUPERVISOR LICENSE EXAMS (DOMESTIC AND INDUSTRIAL)

Solved MCQs and Question Papers from State Electricity Board Exams for Supervisor License (Supervisor Certificate of Competency)

SUDESH K JAIN



Click to Buy
Amazon | Flipkart | Pothi Store

Indian Standard

CODE OF PRACTICE FOR THE SELECTION, INSTALLATION AND MAINTENANCE OF SWITCHGEAR AND CONTROLGEAR

PART II SELECTION

0. FOREWORD

0.1 This Indian Standard (Part II) was adopted by the Indian Standards Institution on 3 March 1982, after the draft finalized by the Code of Practice for Power Installation and Maintenance Sectional Committee had been approved by the Electrotechnical Division Council.

0.2 The object of this standard (Part II) is to provide guidelines for the selection of switchgear and controlgear and the associated auxiliary equipment.

0.3 It has been generally felt that the requirements of the switchgear of different voltage ratings can be conveniently covered in a single standard. Keeping this in view, the Indian Standard IS : 3072-1975* was brought out to cover equipments for indoor and outdoor use. Equipment so covered included circuit-breakers, isolators and other switches operating on ac or dc. Separate Indian Standards had been formulated as follows, for detailed codes of practices for fuses, ac induction motor starters, high voltage ac circuit-breakers and other switches:

IS : 3106-1966 Code of practice for selection, installation and maintenance of fuses (voltage not exceeding 650 volts)

IS : 3914-1967 Code of practice for selection of ac induction motor starters (voltage not exceeding 1 000 volts)

IS : 5124-1969 Code of practice for installation and maintenance of ac induction motor starters (voltage not exceeding 1 000 V)

IS : 5987-1970 Code of practice for selection of switches (voltage not exceeding 1 000 V)

IS : 7987-1976 Guide for selection of high voltage ac circuit-breakers

*Code of practice for installation and maintenance of switchgear (*first revision*).

0.4 This standard is being brought out with a view to presenting in a cogent fashion, the codes of practice for the various types of switchgear and controlgear used in electric power system, filling up the gaps between these specifications, utilizing the latest in concepts introduced in the product specifications.

0.5 This standard presents the subject product-wise, bringing out the relevant good practices recommended for LT and HT applications separately. This standard is being brought out in four parts, namely:

Part I General,

Part II Selection,

Part III Installation, and

Part IV Maintenance.

All these parts shall be read in conjunction with each other.

0.6 In the preparation of this standard, considerable assistance has been derived from the information contained in the Indian Standards listed in **0.3**. On publication of this standard (Parts I to IV), the Indian Standards in **0.3** would stand withdrawn.

0.7 During the preparation of various parts of this standard, the expert Panel, responsible for the same, had kept in view the fact that the standard could at best give guidance on the bulk of the equipment used in the country and should be understood in the manner; that aspects relating to selection, installation or maintenance of EHV equipment as well as those intended for very special application would have to be supplemented with additional data, not attempted by the present series.

0.8 For the purpose of deciding whether a particular requirement of this standard is complied with, the final value, observed or calculated, expressing the result of a test, shall be rounded off in accordance with IS : 2-1960*. The number of significant places retained in the rounded off value should be the same as that of the specified value in this standard.

1. SCOPE

1.1 This standard (Part II) covers guidelines for selection of all types of switchgear and controlgear for indoor and outdoor use.

1.2 The requirements provided here shall be read in conjunction with those in Part I of this standard.

*Rules for rounding off numerical values (*revised*).

SECTION 1 GENERAL

2. GENERAL CRITERIA FOR SELECTION

2.0 The information collected on the nature of the installation and the availability of equipment combined with the characteristics of the same as conforming to the relevant Indian Standard shall guide optimum choice.

2.1 The selection of equipment shall be based on criteria, such as the function of the equipment, type of the equipment, enclosures, dimensions, rating and operational characteristics, type of duty envisaged and other relevant considerations as listed in this standard.

NOTE — For the purposes of this standard, the term 'equipment' is used to denote any type of switchgear or controlgear.

2.2 The service conditions for which an equipment is suitable are defined in the respective product standards. These normally include ambient temperature conditions and the reference ambient temperature, altitude, atmospheric pressure, humidity, degree of tolerable pollution and such other conditions under which the design of the equipment is expected to guarantee the declared performance.

The actual service conditions at the location of installation of the equipment shall be studied to assess any correction factors to be employed. This should be of consideration while selecting the equipment. Guidance on the same shall be obtained from the relevant Indian Standards or from manufacturer's instructions.

SECTION 2 SPECIFIC GUIDELINES FOR LOW VOLTAGE EQUIPMENT

3. SPECIFIC GUIDELINES FOR SELECTION OF EQUIPMENT FOR VOLTAGES UP TO AND INCLUDING 1 000 V ac or 1 200 V dc

3.1 Fuses

3.1.1 *Function* — A fuse in an electric circuit stands guard at all times to protect the circuit and the equipment connected to it from damage within the limits of its rating.

3.1.2 *Classification* — Fuses for low voltage application can be classified according to the:

a) type of contacts of the fuse-link,

b) principle of replacement of the fuse-link,

c) principle of operation, and

d) degree of protection against contacts and influences.

The broadly accepted classification is therefore:

a) Rewirable type (*see* IS : 2086-1963*) — { reversible type, non-reversible type, and sliding type }

b) Cartridge type —
- D-type (*see* IS : 8187-1976†) — { with knife-blade contacts, for bolted connection, and with cylindrical caps }
- Link-type [*see* IS : 9224 (Part I)-1979‡] — { General purpose { *gI* / *gII* }, and Back-up fuse links (*aM*) }

NOTE 1 — The fuses should be used in each live conductor of the distribution system. They should not be used in the neutral conductor or a conductor which is always earthed while the system is live. The various points to be considered for the selection of the appropriate type and rating of the fuse are explained further.

NOTE 2 — If protective devices are discriminative, then the fault is localized and only the faulty portion is disconnected. The rewirable fuses do not offer reliable discrimination. The fuse-element of the rewirable fuse is exposed to atmosphere; it oxidizes with the time and, therefore, it results in premature operation of the fuse. Further its characteristics are easily affected by the fluctuation in the ambient temperature or by the improper handling during installation. Due to the ageing effects, the rewirable fuses cannot be calibrated accurately. Cartridge fuses, both D-type and link-type, on the other hand, have definite characteristics.

3.1.3 *Rating and Operational Characteristics*

3.1.3.0 The selection of fuses, for voltages below 1 000 V, shall be in respect of the parameters listed below:

a) Rated voltage;

b) Rated current and rated frequency, if applicable;

c) Breaking capacity;

d) Cut-off characteristics; and

e) Time-current characteristics.

NOTE — *Type of Supply* — The fuses are designed for ac or dc application or for both. It is not necessary that the fuses designed for ac should also be suitable for use on dc systems or *vice versa*.

*Specification for carriers and bases used in rewirable type electric fuses up to 650 volts (*revised*).

†Specification for D-type fuses.

‡Specification for low voltage fuses: Part I General requirements.

3.1.3.1 *Rated voltage* — The rated voltage of the fuse should always be equal to or higher than:

a) the voltage of the circuit in single-phase ac or 2-wire dc circuit; and

b) the line voltage or the voltage between the outer conductors, in three-phase ac or 3-wire dc circuits.

NOTE 1 — When two or more phase circuits are in the same enclosure, it should be considered as a three-phase system.

NOTE 2 — Fuses rated for a particular voltage can, however, be used on lower voltage systems but care should be taken to check that the arc voltage generated by the fuse during its operation is not more than the system insulation capability.

Example :

When a 415 V fuse is to be used on a 60 V system, the switching voltage shall not exceed the value corresponding to the system voltage [*see* IS : 9224 (Part I)-1979*]. This shall be guaranteed by the manufacturer.

3.1.3.2 *Rated current and rated frequency* (*for ac*) — Since the characteristics of fuses are related to the rated current, the selection of appropriate rated current of a fuse for a particular installation will mainly depend upon the fuse characteristics and the type of load (*see* **5.2.1**). Further, manufacturer should be consulted for any derating factor for installation of the fuse unit at higher surrounding air temperature, also taking into consideration the type of enclosure and the presence of any other heat generating source in close vicinity of the fuse.

The rewirable fuses are standardized for rated currents up to 100 A, but the link-type cartridge fuses are standardized for currents as high as 1 250 A. The fuse-links (fuse wire in case of rewirable fuses) are available in a range of rated currents for flexibility of selection. On the other hand only a few sizes of the fuse-bases and carriers are standardized, each permitting the use of a number of fuse-links of different ratings.

Under certain circumstances, such as in cable distribution pillars of electric supply undertakings, it may be preferable to select the fuse-base of such a design which permits installation of fuse-links of maximum number of ratings for the sake of flexibility. However, adequate care shall be taken to ensure that during replacements, the correct ratings of the fuse link be chosen.

The electrical apparatus and the connecting cables and wires have specific thermal capacity to withstand overloads and short-circuit

*Specification for low voltage fuses : Part I General requirements.

currents of certain duration. The fuses used for protection shall therefore be so selected that they are rated to operate before the thermal capacity limit of the electrical apparatus is reached. The manufacturer of the apparatus shall state the maximum rating of the fuse that should not be exceeded.

In the absence of any marking regarding rated frequency on ac fuses, it implies that the fuse meets the conditions for frequencies between 45 and 62 Hz only.

3.1.3.3 *Breaking capacity* — The fuses used in a particular installation should have a breaking capacity rating equal to or more than the prospective short-circuit current at the point of installation. Therefore, when calculating the prospective short-circuit current and the breaking capacity rating of the fuses to be used, it is recommended that due allowance should be made for potential increase of the prospective short-circuit current available as a result of the natural growth of the system or installation.

Rewirable fuses up to 16 A rated current should not be used in locations where short-circuit level exceeds 2 kA and those of higher ratings should be used in such locations where the short-circuit level is 4 kA (*see* IS : 2086-1963*). D-type or link-type cartridge fuses should be used for higher breaking capacities. Cartridge fuses are now available with breaking capacity exceeding 100 kA.

Breaking capacity of a fuse is expressed in modern times in kiloamperes (rms) and is applicable for a given voltage. IS : 9224 (Part II)-1979† specifies for industrial applications, a minimum breaking capacity of 50 kA.

3.1.3.4 *Time-current characteristics* — For the sake of comparison of two fuses, it may be necessary to compare the time-current characteristics of the fuses (*see* **5.2.1**). This is a curve giving the virtual time (for example, pre-arcing time or operating time) as a function of the prospective breaking current under stated conditions of operation. Together with the cut-off characteristics and the I^2t (joule Integral) characteristics, it gives a clear picture of the behaviour of the fuse under a given condition. The standard zones of time-current characteristics based on an ambient temperature of 27°C and on a maximum rated voltage of 500 V ac are given in IS : 9224 (Part II)-1979† for link type cartridge fuses.

*Specification for carriers and bases used in rewirable type electric fuses up to 650 volts (*revised*).

†Specification for low voltage fuses : Part II Supplementary requirements for fuses with high breaking capacity for industrial applications (*superseding* IS : 2208).

General purpose fuse-links are those capable of breaking under specified conditions all currents which cause melting of the fuse-element up to its rated breaking capacity. The standard time-current zones and the limits for general purpose fuse-links of rated currents of 100 A to 1 000 A are identical to *gI* and *gII*.

Back-up fuse-links are those capable of breaking all currents between the lowest current on its time-current characteristicts and its rated breaking current. These are generally used to provide short-circuit protection. Standard time current zones for back-up fuse-links are given in IS : 9224 (Part II)-1979*.

3.1.3.5 *Cut-off characteristics* — Cut-off characteristics give the cut-off current as a function of the prospective breaking current under stated conditions of operation. These represent the highest values of current likely to be experienced in service. At high prospective short-circuit currents, the fuses exhibit cut-off property for pre-arcing times less than 5 millisecond and thereby prevent the heavy short-circuit currents to reach their crest value (*see* Fig. 1). The rewirable type of fuses do not possess this property. The cut-off property of the fuses is very helpful since it protects the connected equipment from the thermal and dynamic effects of heavy short-circuit currents which would have otherwise been applied. The manufacturers should be contacted for the cut-off values of fuses of different ratings at various prospective short-circuit currents.

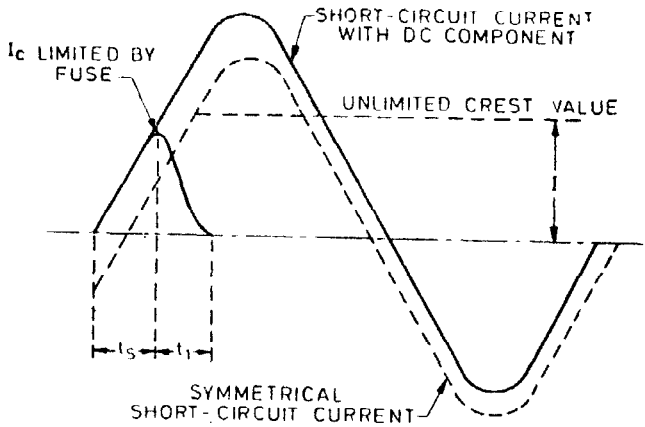

t_s = Pre-arcing time
t_1 = Arcing time

FIG. 1 OSCILLOGRAM SHOWING CUT-OFF

*Specification for low voltage fuses : Part II Supplementary requirements for fuses with high breaking capacity for industrial applications (*superseding* IS : 2208).

Generally, the information is provided in the form of curves as shown in Fig. 2. It should be noted that the cut-off current is expressed in peak value. On the abscissa, the initial symmetrical prospective current I in kA (rms) is plotted in the logarithmic scale and the maximum current peak I_c in kA on the ordinate as an instantaneous value. The influence of the dc component on the crest value in short-circuit paths is seen from the straight lines running at an angle of 45°. The maximum value of current (crest value of the first half wave) is represented by the straight line belonging to the particular dc component.

To determine the peak current i_c, the ordinate should be drawn over the value calculated for the initial symmetrical short-circuit current. It always intersects the straight line of the dc component concerned, and in most cases also that of the fuse. The value of the ordinate of this point of intersection or the smaller value, if there are two points of intersection, is the maximum peak current i_c in kA.

In normal low voltage systems, a dc component up to approximately 50 percent may be expected. Within the range above the 0 percent line in Fig. 2, that is, as soon as a dc component is present, current limitation takes place even with pre-arcing times above 5 millisecond (up to 10 millisecond). For dc, no general values can be laid down for the current limitation, since in the event of a short-circuit, the inductance in the particular system greatly affects the current rise. Similar values apply under normal conditions also.

An example showing the cut-off property of fuses is given below :

Example :

Fuse-links of 200 A rated current are to be installed. Initial symmetrical short-circuit current I = 20 kA (computed rms value) (*see* Fig. 2).

dc component — 50 percent (assumed value)

Without fuses : Current peak — 40 kA (the ordinate I = 20 kA intersects the 50 percent line at point A)

With fuses : Limited current peak = 14·5 kA (the ordinate I = 20 kA intersects the characteristic line of the 200 A fuse at point B).

3.2 Switches

3.2.1 *Function* — The basic function of a switch is to connect or isolate or select a circuit. The fuses in the composite unit of switches and fuses, additionally serve to protect the equipment connected in the circuit mainly against short-circuit.

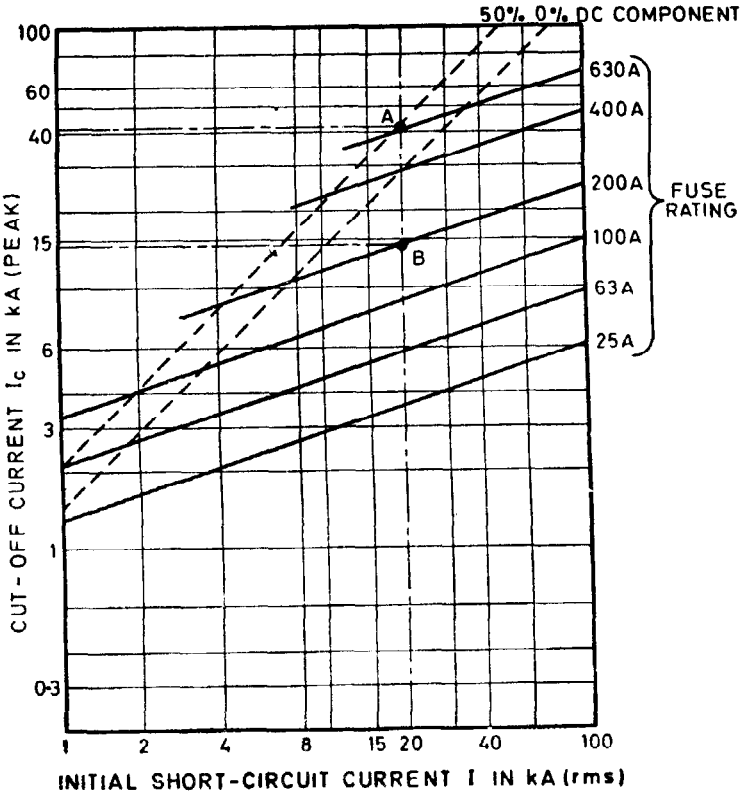

FIG. 2 CUT-OFF CHARACTERISTIC OF CARTRIDGE FUSES

3.2.2 *Classification*

3.2.2.1 According to the method of operation of manually operated equipment, switches are classified as having:

a) Dependent manual operation [*see* **2.1.5.3** of IS : 4064 (Part I)-1978*]

b) Independent manual operation [*see* **2.1.5.5** of IS : 4064 (Part I)-1978*]

*Specification for air break switches, air-break disconnectors, air-break switch-disconnectors and fuse combination units for voltages not exceeding 1 000 V ac or 1 200 V dc: Part I General requirements (*first revision*).

3.2.2.2 According to the degree of protection provided by the enclosure, distinction is made in accordance with IS : 2147-1962*.

3.2.2.3 The type of equipment can also be characterized by the following:

a) Number of poles,

b) Number of positions (if more than two), and

c) Kind of current (ac or dc) and in the case of ac number of phases and rated frequency.

3.2.2.4 Switches are also further categorized depending on the severity of the duty, they can withstand, namely, the utilisation category, and as detailed in IS : 4064 (Part I)-1978†.

NOTE — Control switches, which serve the purpose of controlling the operation of switchgear or controlgear include manual control switches, electromagnetically op rated control switches and pilot switches.

3.2.3 *Rating and Operational Characteristics*

3.2.3.0 The selection of switches shall be based on the parameters indicated below:

a) Utilisation category,

b) Frequency of operation,

c) Rated voltages,

d) Rated currents,

e) Making and breaking capacities, and

f) Number of poles.

3.2.3.1 *Utilisation category* — The utilisation categories of switches have been specified and defined in the following standards:

a) Switches [*see* IS : 4064 (Part I) - 1978†],

b) Disconnectors and switch disconnectors [*see* IS : 4064 (Part I) - 1978†], and

*Specification for degrees of protection provided by enclosures for low-voltage switchgear and controlgear.

†Specification for air-break switches, air-break disconnectors, air-break switch-disconnectors and fuse combination units for voltages not exceeding 1 000 V ac or 1 200 V dc: Part I General requirements (*first revision*).

c) Switches for motor duty [*see* IS : 4064 (Part II)-1978*].

The switches should be selected to suit the duty they are required to perform.

3.2.3.2 *Frequency of operation* — Isolators and switches covered in IS : 4064 (Part I)-1978† are designed for normally, operation once in a while. In case of very frequent operation, either motor control switches covered by IS : 4064 (Part II)-1978* shall be used or the manufacturer consulted.

3.2.3.3 *Rated voltage* — An equipment is defined by the following:

a) Rated operational voltage (U_e), and

b) Rated insulation voltage (U_i).

The rated voltage of the switch shall be so selected as to suit the rated operational voltage of the system in which it will be used.

3.2.3.4 *Rated currents* — An equipment is defined by the following rated currents [*see* **4.3.2** of IS : 4064 (Part I)-1978†]:

a) Rated thermal current (I_{th}), and

b) Rated operational current (I_e).

While deciding the rated operational current of the switch, both the making and breaking capacity (*see* **3.2.3.5**) and the temperature-rise permissible shall be borne in mind.

3.2.3.5 *Making and breaking capacity* — With respect to making and breaking capacities the switches are classified according to the utilization category given in the relevant ISS.

Where switches are used for direct control of motors [*see* **5.1.2.3** (a)], the making and breaking capacity should correspond to those specified in IS : 4064 (Part II)-1978*.

3.2.3.6 It is very essential to keep the making and breaking capacity in mind while selecting the units as has been explained in **5.**

---

*Specification for air-break switches, air-break disconnectors, air-break switch-disconnectors and fuse combination units for voltages not exceeding 1 000 V ac or 1 200 V dc: Part II Specific requirements for the direct switching of individual motors (*first revision*).

†Specification for air-break switches, air break disconnectors, air-break switch-disconnectors and fuse-combination units for voltages not exceeding 1 000 V ac or 1 200 V dc: Part I General requirements (*first revision*).

3.2.3.7 *Short-circuit rating* — It is important to select a switch of sufficient capacity depending upon the prospective value of the fault current expected at the point of installation, and the factors given below:

a) *Short time withstand capacity* — The switches should be of sufficient capacity to withstand the thermal and dynamic effects of short circuit current. While deciding the withstand capacity, one should take due consideration of the protective device used in series with the switches for the protection against short circuit, that is, the tripping time of the circuit breakers, the operating time of the fuses and their cut-off characteristics, if any.

b) *Short-current making capacity* — For certain application, it may be unavoidable that switches (never disconnector) are closed on an existing fault. In such cases, it should be ensured that switches have sufficient making capacity so that they do not get damaged before the fault is cleared by the protective device installed in series.

NOTE — Neither isolators nor switches are intended to break the circuits on short circuit. No short-circuit breaking capacity is assigned to them.

3.2.4 *Combination Units of Switches and Fuses — See* IS : 4064 (Part I)-1978*

3.2.4.1 *Arrangement of switches and fuses* — The composite unit of switches and fuses may have the fuses either incorporated on the moving member of the switch or installed separately. In the former case, the composite units are termed as 'fuse switch' and in the latter case as 'switch-fuse'. These terms are only by way of differentiation although there is no difference in their performance, requirements, tests, etc, as laid down in the corresponding Indian Standards.

It is possible to have different rating for the switch and fuse in a combination unit. However, excepting under special conditions, the rating of the fuse should not exceed the rating of the switch.

3.2.4.2 Fuse combination units are characterised by the rated fused short-circuit current [*see* IS : 4064 (Part I)-1978*].

3.3 Circuit Breakers — *See* IS : 2516 (Parts I and II/Sec 1)-1977†.

3.3.1 *Function* — The basic function of a circuit-breaker is to protect the circuit and the equipment connected to it, make carry and break the

*Specification for air-break switches, air-break disconnectors, air-break switch-disconnectors and fuse-combination units for voltages not exceeding 1 000 V ac or 1 200 V dc: Part I General requirements (*first revision*).

†Specification for alternating current circuit-breakers: Parts I and II Requirements and tests, Section 1 Voltages not exceeding 1 000 V ac or 1 200 V dc (*first revision*).

rated current satisfactorily at the rated voltage, as well as at abnormal system conditions. It shall also be capable of making on to fault up to its rated making capacity and breaking any short circuit up to its rated breaking capacity without any difficulty.

3.3.2 *Classification* — According to the method of control of the closing operation, circuit breakers are designated as having:

a) dependent manual closing,

b) independent manual closing,

c) dependent power closing, and

d) stored energy closing.

According to the interrupting medium, they are divided into:

a) air-break, and

b) oil immersed break.

According to the degree of protection provided by the enclosure distinction is made in accordance with IS : 2147-1962*.

The type of equipment is also further characterized by:

a) number of poles,

b) kind of current,

c) method of closing,

d) method of opening, and

e) provision for maintenance.

NOTE — Circuit breakers are also classified depending on their short-circuit performance category.

3.3.3 *Rating and Operational Characteristics*

3.3.3.0 The selection of circuit breaker shall be made based on the parameters given below:

a) Rated voltages,

b) Rated currents,

c) Rated frequency,

d) Rated short-circuit making and breaking capacities,

f) Rated short-time withstand current, and

g) Short-circuit performance categories.

*Specification for degrees of protection provided by enclosures for low-voltage switchgear and controlgear.

The characteristics of the circuit breaker also includes:

a) control circuits and air supply systems,

b) types and characteristics of releases, and

c) characteristics of auxiliary switches.

3.3.3.1 *Rated voltages* — A circuit breaker is defined by the following rated voltages [*see* **4.3.1** of IS : 2516 (Parts I and II/Sec 1)-1977*]:

a) Rated operational voltage (U_e), and

b) Rated insulation voltage (U_i).

The rated voltage of the circuit breaker shall be so selected as to suit the rated operational voltage of the system in which it will be used.

3.3.3.2 *Rated currents* — A circuit breaker is defined by the following rated currents [*see* **4.3.2** of IS : 2516 (Parts I and II/Sec 1)-1977*]:

a) Rated thermal current (I_{th}), and

b) Rated uninterrupted current (I_u).

3.3.3.3 *Rated frequency* — The rated frequency of the equipment shall be so chosen as to suit the service frequency.

3.3.3.4 *Rated short-circuit making and breaking capacities* — The assigned values of short-circuit making and breaking capacities imply that the equipment is capable of making and breaking the current up to and including the rated capacity at an applied voltage and recovery voltage respectively, corresponding to 110 percent of the rated operational voltage.

3.3.3.5 *Short-circuit performance category* — The short-circuit performance category of the equipment states the rated operating sequence and the condition of the circuit-breaker after performing this sequence at the rated short-circuit making and breaking capacities. For the same circuit-breaker, the values of the rated short-circuit breaking and corresponding making capacities may be different for different short-circuit performance categories.

*Specification for alternating current circuit-breakers: Parts I and II Requirements and tests, Section 1 Voltages not exceeding 1 000 V ac or 1 200 V dc (*first revision*).

3.3.3.6 The following characteristics should also be considered while selecting the circuit-breaker:

a) For control circuits — Rated control supply voltage and kind of current

b) For air-supply systems — Rated pressure and its limits and volumes of air at atmospheric pressure required for each closing and each opening operation

c) For shunt release and under voltage release — Rated voltage and kind of current

d) For over-current release — Rated thermal current, kind of current and range of settings

e) For auxiliary switches — As in IS : 6875 (Part I)-1973*.

3.4 Motor Starters

3.4.1 *Function* — The motor starter comprises the main switching devices together with protective devices and the control and auxiliary devices, such as, push buttons, limit switches and pilot lamps.

A motor starter has the following functions to perform:

a) Start and stop the motor. This is the fundamental job of every starter. It shall be capable of switching the motor ON and OFF the line repeatedly, safely, quickly and dependably;

b) Limit motor inrush current, where necessary. This may be achieved by actual reduction of voltage at motor terminals; temporary reconnection of stator winding; connecting resistance in the rotor circuit either temporarily or permanently or by other suitable means;

c) Permit automatic control when required;

d) Protect motor and other connected equipment; and

e) Under voltage protection (if required).

3.4.2 *Classification*

3.4.2.1 The following are the main types of motor starters in use:

a) Direct-on-line starters [*see* IS : 8544 (Part I)-1977†].

*Specificasion for control switches (switching devices for control and auxiliary circuits including contractor relays) for voltages up to and including 1 000 V ac and 1 200 V dc: Part I General requirements and tests.

†Specification for motor starters for voltages not exceeding 1 000 V: Part I Direct-on-line ac starters.

b) Reduced voltage starters { Star-delta starters [*see* IS : 8544 (Part II)-1977*] ; Auto-transformer starters [*see* IS : 8544 (Part IV)-1979†] }

c) Rheostatic rotor starters [*see* IS : 8544 (Part III/Sec 2)-1979‡]

3.4.2.2 These types of starters are further classified as follows:

a) According to the method of control:

1) automatic (by pilot switch or sequence control);
2) non-automatic (by hand-operation, push-buttons, etc);

b) According to the method of operation:

1) manual;
2) electromagnetic;
3) motor-operated;
4) pneumatic; and
5) electro pneumatic.

c) According to the interrupting medium:

1) air-break; and
2) oil-immersed break.

d) According to the degree of protection provided by enclosures as in IS : 2147-1962§.

3.4.2.3 Star-delta starters in addition to **3.4.2.2** are further classified depending on the method of change-over from star to delta, as follows:

a) Automatic changeover — Controlled by a timer or by under current relays, and

b) Non-automatic changeover — Controlled by hand or by push-buttons.

*Specification for motor starters for voltages not exceeding 1 000 V: Part II Star delta starters.

†Specification for motor starters for voltages not exceeding 1 000 V: Part IV Reduced voltage ac starters; two-step auto transformer starters.

‡Specification for motor starters for voltages not exceeding 1 000 V: Part III Rheostatic rotor starters, Section 2 Additional requirements for ac rheostatic rotor controllers.

§Specification for degrees of protection provided by enclosures for low-voltage switchgear and controlgear.

3.4.2.4 Auto-transformer starters in addition to **3.4.2.2** are further classified:

a) According to method of changing from the starting position to the FULL ON position:

1) automatic changeover — Controlled by a timer or by under current relays

2) non-automatic changeover — Controlled by hand or by push button.

b) According to the method of connecting the auto-transformer:

1) open transition starters; and

2) closed transition starters.

c) According to the method of cooling the auto-transformer:

1) air-cooled by connection, and

2) cooled by immersion in oil.

3.4.2.5 Rheostatic rotor starters, in addition to **3.4.2.2** are further classified as follows:

a) According to the method of changing starting steps:

1) automaic changeover — Controlled by a timer by an under current relays

2) non-automatic changeover — Controlled by hand by push-buttons.

3) semi-automatic changeover.

b) According to the means of cooling of resistors:

1) cooled by connection,

2) cooled by forced air, and

3) cooled by immersion in oil.

3.4.2.6 The following feautures of the switching device in the main circuit shall also be considered while selecting the equipment:

a) number of poles;

b) interrupting medium (air, oil, etc);

c) method of operation [for example, dependent manual operation, dependent power operation (contactor), stored energy operation, etc]; and

d) rated values.

3.4.2.7 The starter may be provided with one or more of the following relays or releases. Some of these types requires consultation between the manufacturer and the user while selecting the equipment:

a) Release with shunt coil (shunt trip),

b) Overload time-delay relay (which may be dependent or independent of previous load),

c) Under voltage opening relay or release,

d) Instantaneous overcurrent relay or release, and

e) Other relays or releases.

The types and characteristics of automatic changeover devices for star-delta type starters would also have a bearing on selection. These are:

a) timers (for example, specified time all-or-nothing relays), and

b) under current relays.

3.4.3 *Rating and Operational Characteristics*

3.4.3.0 The selection or motor starters shall be based on the parameters given below:

a) Rated voltages,

b) Rated currents,

c) Rated frequency,

d) Inrush current criteria and overload settings,

e) Making and bearing capacity,

f) Utilization category,

g) Frequency of operation,

h) Number and type of auxiliary contact, and

k) Co-ordination with short-circuit protective devices (*see* **5.2.4.1**).

3.4.3.1 *Rated voltage and frequency*

a) A starter may have different rated voltages corresponding to those of main circuit [rated operational voltage (U_e) and rated insulation voltage (U_i)], control circuit and auxiliary circuit. Further, the making and breaking capacities of the main and auxiliary contacts are stated at different rated voltages.

b) The control circuit voltage has extra significance in defining:

1) the limits of voltage in which the starter shall close positively, and

2) the drop-off voltage.

c) In accordance with IS : 2959-1975* and IS : 8544 (Part I)-1977†, the contactors and starters shall close positively between 85 to 110 percent of the rated control voltage. Thus, if there is a starter for the rated coil voltage of 415 V, it should positively close between 353 to 456 V. In case a 415 V starter is used for 400 V the limits available to take care of the voltage fluctuations would be:

$$\frac{353}{400} = 88{\cdot}2 \text{ percent and } \frac{456}{400} = 114 \text{ percent.}$$

d) The standard starters with ac coils are designed for operation on supply with a frequency of 50 Hz.

NOTE — If the coil of the starter has to be used on any frequency other than 50 Hz, the manufacturer of the starter should be consulted.

e) When exceptionally quiet operation is required or other system conditions necessitate, ac contactors or starters may be provided with dc coils.

3.4.3.2 *Rated currents*

a) Unlike other products, the term 'rated current' that is, the maximum current with which the starter may be loaded continuously without the temperature-rise of the equipment exceeding the maximum permissible limits, generally does not prove sufficient to bring out clearly all the capabilities of the starters. It is, also necessary to consider the type of duty cycle.

To make the matter clear, the value of current which fixes the temperature-rise is known as rated thermal current (I_{th}) and is based on the standard (8 hours) duty. On the other hand, the value of current in terms of which the making and breaking capacity is specified is known as rated operational current (I_e).

b) For uninterrupted duty, a starter may have to be derated for I_{th}. In case of starters with silver contacts, which do not require self-cleaning, there is generally no derating necessary for uninterrupted duty. High ambient temperature shall, however, be considered and derating factors obtained from the manufacturers.

*Specification for contactors for valtages not exceeding 1 000 V ac or 1 200 V dc. (*first revision*).

†Specification for motor starters for voltages not exceeding 1 000 V: Part I Direct-on-line ac starters.

3.4.3.3 *Inrush-current criteria* — While starting a motor direct-on-line, it draws a heavy inrush-current from the supply system. This may cause voltage drop likely to interfere with other equipment on the system. Further from the point of view of load connected, it may become necessary to make the starting smooth. In case of the above two conditions, it would be necessary to limit the inrush current particularly for bigger capacity motors. The starters which connect the motor directly across the lines are called direct-on-line starters and those employing current limitation for squirrel cage induction motors are generally star-delta, primary resistance, reactor or auto-transformer type.

NOTE — There are usually limitations on direct-on-line starting of motors. The maximum rating of motor for direct-on-line starting varies from place to place and should be ascertained from the distribution authorities.

3.4.3.4 *Making and breaking capacity and utilization category*

a) The making and breaking capacity of a starter depends on the voltage, frequency and the type of the load. AC motor starters have been classified into two categories with typical applications as given in Table 1 of IS : 8544 (Part I)-1977*.

NOTE — The requirements and test conditions for making and breaking capacity of starters of these categories have also been specified therein.

b) Table 2 of IS : 8544 (Part I)-1977* prescribe conditions and requirements for making and breaking capacities of motor starters corresponding to different utilization categories, and also details of the conditions and requirements for normal load operation of motor starters corresponding to different utilization categories. These should be referred to for selection of a starter for any particular utilization category.

c) A starter may even be uprated for operational current, for example, AC_3 category starter may be used at higher operational current while performing AC_2 duty provided the value does not exceed the rated thermal current (I_{th}). Similarly, such starters may have to be derated while performing AC_4 duty.

d) Making and breaking capacity and the rated thermal current are two different things altogether and both shall be taken into consideration for selecting a suitable starter. If a starter has a rated thermal current of 10A, it is not at all necessary that it may start a motor also rated for 10A. It also depends upon its making capacity, which shall be at least 60A (six times full load current) to start the motor direct-on-line rated for 10A.

*Specification for motor starters for voltages not exceeding 1 000 V: Part I Direct-on-line ac starters.

3.4.3.5 *Frequency of operation*

a) In the relevant ISS, the starters are classified according to different intermittent duty ratings also.

b) For certain devices, such as machine tools and rolling mills, a starter may have to operate very frequently. Such an operation has the following effects:

1) Greater mechanical wear and tear,
2) Higher breaking capacity requirements,
3) Higher temperature-rise, and
4) Reduction in the life of contacts.

c) It is not only important to know the number of operations per hour, but also the period in each cycle for which the starter remains closed and open. This is determined from the following expression:

$$\text{On-load Factor} = \frac{\text{Switching-in period}}{\text{Total period per cycle}} \times 100$$

Thus, for example, a starter carrying 100 A for 4 minutes in every 10 minutes shall be termed as:

' Intermittent duty 100 A, 4 minutes/10 minutes ' or

' Intermittent duty 100 A, 6 operations per hour, 40 percent ' (*see* Fig. 3).

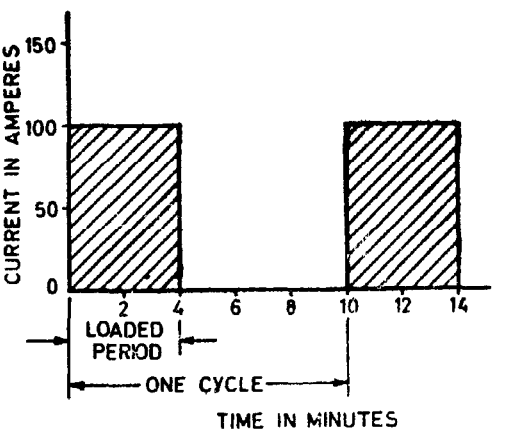

FIG. 3 INTERMITTENT LOADING CYCLE

d) If the frequency of operation is very rapid, such as in inching, the starters open even before the starting inrush currents have died down, with the result that unlike ordinary operations, the starters have to break even higher currents.

3.5 Factory Built Assemblies of Switchgear and Controlgear — Under consideration.

SECTION 3 SPECIFIC GUIDELINES FOR HIGH VOLTAGE EQUIPMENT

4. SPECIFIC GUIDELINES FOR SELECTION OF EQUIPMENT FOR VOLTAGES ABOVE 1 000 V

4.1 Fuses

4.1.1 *Function* — The provisions given in **3.1.1** shall apply.

4.1.2 *Classification*

4.1.2.1 The following are the two main types of fuses for system voltages above 1 000 V:

a) Current limiting fuses [*see* IS : 9385 (Part I)-1979*] { general purpose / back-up

b) Expulsion and similar fuses [*see* IS : 9385 (Part II)-1980†] { Class 1 / Class 2

4.1.3 *Rating and Operational Characteristics*

4.1.3.0 The selection of fuses for voltages above 1 000 V shall be made based on the parameters given below:

a) Rated voltage,

b) Rated current,

c) Rated insulation level, and

d) Class of fuse.

4.1.3.1 Specific guidelines on the choice and application of high voltage fuses are provided in IS : 9385 (Part III)-1980‡.

*Specification for high voltage fuses: Part I Current limiting fuses.

†Specification for high voltage fuses: Part II Expulsion and similar fuses.

‡Specification for high voltage fuses: Part III Application guide for high voltage fuses.

4.1.4 *Notes on Circuit Protection*

4.1.4.0 Circuits to be protected may be divided into two general classes, steady load circuits and fluctuating load circuits.

4.1.4.1 *Steady load circuits* — Circuits with loads which do not fluctuate much above normal value may be called ' steady load ' circuits.

If, as often happens, fuses are the only protection in a steady load circuit, their rated current would be the standard value, equal to or the next higher than that of the circuit or of the apparatus, whichever is smaller. If other over-current protection is provided, or if discrimination is required, a fuse of still greater rated current may be permissible or necessary.

4.1.4.2 *Fluctuating load circuits* — Circuits with loads which may fluctuate to peaks of comparatively short duration above normal value, for example, motor circuits, capacitor circuits and transformer circuits, all of which are subject to a switching transients, may be called ' fluctuating load circuits '.

For fluctuating-load circuits, the fuses should have time current characteristics such as to allow the transient over-current to be carried without operation. For this purpose it is usually necessary to select fuses of a rated current greater than that of the circuit.

a) *Motor circuits* — Fuses for service on motor circuits should be carefully selected to ensure freedom from unwanted operation on starting and, at the same time, to avoid deterioration due to frequent starts with currents greater than the rated current of the fuse but less than the fusing current corresponding to the duration of the switching-in peak.

b) *Capacitor circuits* — It is essential that fuses shall not be blown by the inrush current which flows when a capacitor is switched in. It is accordingly desirable to obtain a definite recommendation from the fuse manufacturer as to the current rating of the fuse.

c) *Transformer circuits* — The following factors, where appropriate, should be taken into consideration in choosing the current rating of the fuse in the choice of primary circuits of transformers:

   1) The inrush current (the inrush current as a proportion of full-load current, tends to decrease with increase in transformer rating);

   2) Overload currents to be carried by the transformer;

   3) Discrimination with fuses or relays in the secondary circuit, bearing in mind that such protection is usually required to operate without blowing the primary fuse;

4) The desirability, on overhead systems, of reducing the risk of fuses being blown as a result of lightning over-voltages;

5) The necessity of operating sufficiently fast for phase-to-earth faults in the transformer secondary terminal zone; and

6) Discrimination with fuse or other over-current protective devices nearer to the supply source.

4.1.4.3 *Discrimination* — The following sub-clauses set out the principles on which correct discrimination in operation between fuses and fuses or between fuses and other over current protective devices depends. In view of the many variables involved in predicting discrimination it is recommended that the assistance of the manufacturer should be sought in the form of specific information on discrimination.

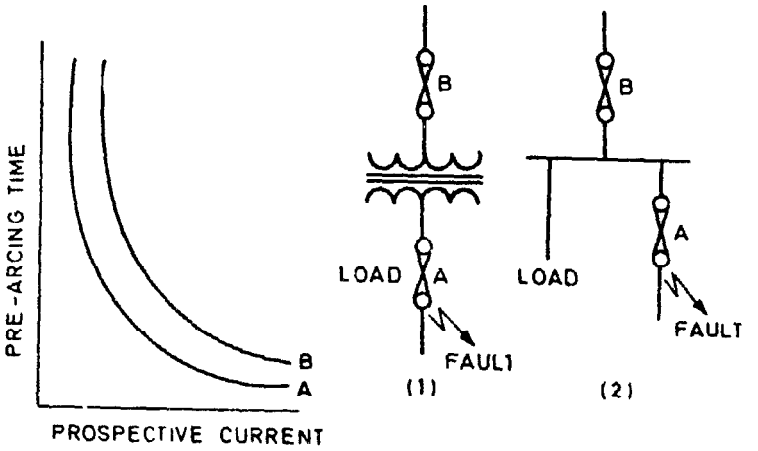

FIG. 4 TYPICAL TIME/CURRENT CHARACTERISTICS OF CURRENT LIMITING FUSES OF DIFFERENT CURRENT RATINGS

a) *Discrimination between fuses* — Discrimination occurs when the fuse or fuses nearest to a fault operate, leaving all other fuses in the circuit unimpaired. Since discrimination is required at any current up to the maximum fault level of the system, it is necessary that the time current characteristics of any fuse *A* must lie, throughout its length, below that of any fuse *B* nearer to the supply point, as shown in Fig. 4. Where fuses are used on the primary and secondary sides of a transformer, the current ratio should be taken into account.

Discrimination can be relied upon under these conditions, however, only when the arcing time of fuse *A* is small compared with its pre-arcing time.

The first important factor for discrimination is pre-arcing time; in the second place it shall be noted that an alteration in the temperature of the fuses gives them time current characteristics different from the type test values; and in the third place it shall also be noted that the time current characteristics may differ from the type test values according to circuit conditions (for example, asymmetry and power factor) at the time of operation.

On short-circuit, since the pre-arcing time is short, discrimination cannot be predicted from pre-arcing time current characteristics. This is because the arcing time becomes a higher proportion of the total operating time, with the result that the current during the arcing time of the smaller fuse may cause the larger fuse to operate. Information on arcing time may be used to prepare curves of virtual total operating time to assist in predicting discrimination. An alternative method of predicting discrimination is to compare the operating joule integral of the smaller fuse with the pre-arcing joule integral of the larger fuse.

Figure 5 shows generally the difference in form between the time current characteristics of expulsion fuses and those of current limiting fuses, and when, those apply, a wide divergence

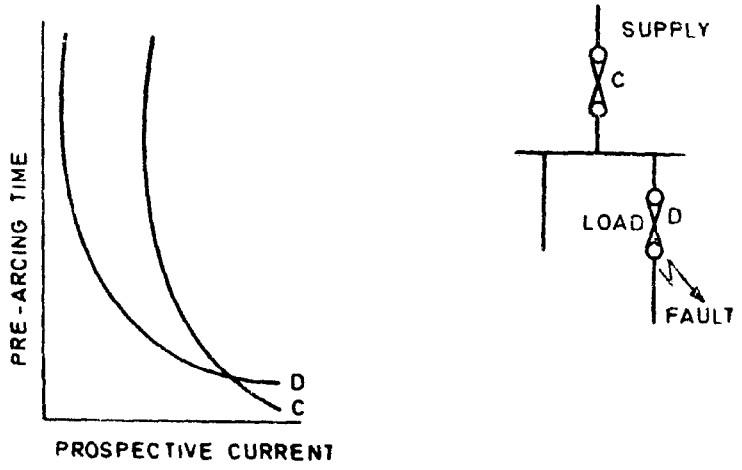

D = Expulsion fuse

C = Current limiting fuse

FIG. 5 TYPICAL TIME/CURRENT CHARACTERISTICS OF A CURRENT-LIMITING FUSE AND AN EXPULSION FUSE

of current rating is necessary. The characteristics of the fuses selected should be widely separated at small currents, in order that they shall not cross at larger currents.

b) *Discrimination between fuses and other over-current protective devices* — The general use of fuses with other over-current protective devices is for back-up protection; that is to say, the other device is required to clear the lower values of fault-current through the normal operation of its automatic trips, and only at currents above some predetermined value is the fuse required to take over the protection of circuit. It is, therefore, necessary that the time current characteristics of the fuse and of the other devices shall cross at the desired value of current. This promotes continuity of supply by allowing operation of the fuses only with electrical faults and minimizes the possibility in three-phase circuits of single-phasing, such as may be caused by the operation of a fuse in one phase only.

Figure 6 shows a typical time current characteristic for a fuse and some other devices, T being the take-over point. At currents above T there remains the possibility that although the fuse interrupts the circuit, the current it passes may, by its magnetic or thermal effects, damage the other device; therefore, quite apart from any question of breaking-capacity, the back-up fuses should have a small cut-off current. It is desirable that the other device should have an adequate short-time current rating.

The take-over point should be at a current slightly less than the breaking capacity of the other device but to avoid unnecessary operation of the fuses by any currents that can be safely interrupted by the other device, it is necessary to ensure that the take-over point is not unduly low.

In addition, the maximum cut-off current of the fuse, whether under symmetrical or asymmetrical conditions, must be within the making capacity of the other device. To ensure this, it may be necessary to use a fuse of lower current rating than would be required by other considerations.

Where the breaking capacity of a motor starting device does not greatly exceed the starting current of the motor, close co-ordination between fuse and over current relay is necessary to ensure adequate protection. However, in selecting an appropriate fuse rating, an ample margin must be allowed against repetitive motor starting surge currents in order to guard against possible fuse ageing and it is usually advisable to seek the fuse manufacturer's guidance. For this application, actual

current rating is of secondary importance compared with the ability of a given fuse to withstand stated motor surge conditions and the aim should be rather to select a fuse having the lowest values of cut-off current and total I^2t for a given motor starting ability.

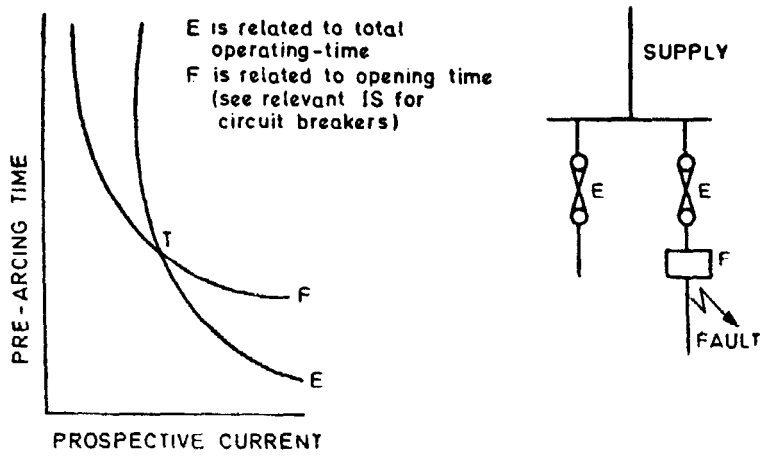

E = Other over-current protective device
F = Fuse

FIG. 6 TYPICAL TIME/CURRENT CHARACTERISTICS OF A CURRENT LIMITING FUSE AND ANOTHER OVER-CURRENT DEVICE

4.2 Switches

4.2.1 *Function* -- The provisions given in **3.2.1** shall apply.

4.2.2 *Classification* — There exists a large variety of switches (isolators) which may be grouped broadly as indoor type and outdoor type and further classified as follows:

a) Air break/oil break/gas,
b) On-load or off-load,
c) Single-pole or three-pole,
d) Individual operated or group operated,
e) Operating mechanism:
   1) Manual,
   2) Pneumatic, and
   3) Electrical.

f) Open type or metal enclosed,

g) Type of mounting:

1) Horizontal upright, and
2) Vertical.

h) Type of break:

1) Horizontal,
2) Vertical, and
3) Pantograph.

j) Number of breaks per pole.

4.2.3 *Rating and Operational Characteristics*

4.2.3.0 Selection of switches for voltages above 1 000 V ac shall be made based on the parameters listed below:

a) Rated voltage:

b) Rated frequency;

c) Rated current, current carrying capacity under site conditions;

d) Rated breaking current;

e) Basic insulation level;

f) Rated peak short-circuit current;

g) Switching duty (on-load, off-load, capacitor switching, etc);

h) Siesmic acceleration;

j) Short-time current;

k) Making capacity;

m) Rated pressure of compressed air/gas supply;

n) Accessories required; and

p) Visual discharge voltage.

NOTE — Items (g), (h), (n) and (p) are normally required to be considered for voltages above 132 kV for which the user should consult the manufacturer.

4.3 Circuit Breakers

4.3.1 *Function* — The provisions of **3.3.1** shall apply.

4.3.2 *Classification* — The provisions of **4.2.2** shall apply, except (g) and (h) therein.

4.3.3 *Rating and Operational Characteristics*

4.3.3.0 The selection of circuit breakers for voltages above 1 000 V hall be made based on the parameters given below:

a) Rated voltage,

b) Rated insulation level,

c). Rated frequency,

d) Rated normal current,

e) Rated short-circuit breaking current,

f) Rated transient recovery voltage,

g) Out-of-phase characteristics,

h) Rated operating sequence,

j) Rated duration of short-circuit,

k) Rated line-charging cable-charging and single capacitor bank breaking currents,

m) Rated small inductive breaking current,

n) Overvoltage factors, and

p) Reclosing requirements.

NOTE — The purchaser should furnish full particulars of the auxiliary equipment, such as reactors, transformers, etc, which may be used in conjunction with the circuit-breaker installation for the information of the manufacturer.

4.3.3.1 *Selection of rated voltage*

a) The rated voltage of the circuit-breaker should be chosen so as to be at least equal to the highest voltage of the system at the point where the circuit-breaker is to be installed.

NOTE — The variations on declared value of high voltage and extra high voltage systems permitted by the Indian Electricity Rules at present may conflict with the variations of the supply voltage taken into account while designing the circuit-breakers in accordance with the relevant Indian Standards on circuit-breakers. This fact should be borne in mind while selecting the rated voltage of ac circuit-breakers.

b) The rated voltage of a circuit-breaker shall be selected from the standard values given in IS : 2516 (Part II/Sec 2)-1980*. Preferred combinations of rated voltage, rated short-circuit current and rated normal current are also given therein. The

*Specification for alternating circuit-breakers: Part II Rating, Section 2 For voltages above 1 000 V ac (*first revision*).

insulation level specified in Tables 1 to 3 of IS : 2516 (Part II/ Sec 2)-1980* should also be taken into account in the selection of the rated voltage.

c) The rated voltages given in IS : 2516 (Part II/Sec 2)-1980* are voltages between lines.

4.3.3.2 *Selection of rated insulation level*

a) This standard applies in principle to circuit-breakers both in exposed and non-exposed installations, but the test voltage values for circuit-breakers in non-exposed installations are under consideration.

b) The rated insulation level of a circuit-breaker shall be selected from Tables 1 to 3 of IS : 2516 (Part II/Sec 2)-1980*. The values in these standards apply to both indoor and outdor circuit-breakers in exposed installations. For the choice between the different insulation levels corresponding to a given rated voltage, reference shall be made to IS : 3716-1978†. It shall be specified in the enquiry whether the circuit-breaker is to be of indoor or outdoor type.

c) The insulation co-ordination in an electrical system serves to minimize damage to the electrical equipment due to overvoltages and tends to confine flashovers (when these cannot be economically avoided) to points where they should cause damage to economically and operationally acceptable level.

d) Precautions should be taken to limit the overvoltages on the terminals of the circuit-breaker to stated values below the insulation level. The choice of specifying the values to which the lightning overvoltages should be limited is referred to in IS : 3716-1978†.

e) Where a circuit-breaker is required for a position necessitating a higher insulation level, this shall be specified in the enquiry.

NOTE — If circuit-breakers having reduced insulation are to be installed where they may be used for synchronization, an increase of the value of power-frequency withstand voltage across the open circuit-breaker may be necessary.

4.3.3.3 *Rated frequency* — The manufacturer should be consulted if a circuit-breaker is to be used at any frequency other than its rated frequency.

*Specification for alternating circuit-breakers: Part II Rating, Section 2 For voltages above 1 000 V ac (*first revision*).

†Application guide for insulation co-ordination (*first revision*).

4.3.3.4 *Selection of rated normal current*

a) The rated normal current of a circuit-breaker shall be selected from the standard values given in **7** of IS : 2516 (Part II/Sec 2)-1980*. Preferred combinations of rated normal current, rated voltage and rated short-circuit current are given in **23** of IS : 2516 (Part II/Sec 2)-1980*.

b) It should be noted that circuit-breakers have no specified continuous overcurrent capability. When selecting a circuit-breaker, therefore, rated normal current should be such as to make it suitable for any load current that may occur in service. Where overcurrents are expected the manufacturer should be consulted.

4.3.3.5 *Selection of rated short-circuit breaking current*

a) As stated in **8.0** of IS : 2516 (Part II/Sec 2)-1980*, the rated short-circuit breaking current is expressed by two values, namely:

1) the rms value of its ac component (short-circuit current), and

2) its percentage dc component.

b) The percentage dc component varies with time from the incidence of the short-circuit. When the circuit-breaker meets the standard requirements stated in **8** of IS : 2516 (Part II/Sec 2)-1980*, the percentage dc component the circuit-breaker may deal with is not less than the value given in Fig. 1 of IS : 2516 (Part II/Sec 2)-1980* at the end of the time interval corresponding to the shortest possible opening time of the circuit-breaker plus, for a circuit-breaker to be tripped solely by a form of auxiliary power a minimum delay time of one half cycle of rated frequency. Fig. 1 of IS : 2516 (Part II/Sec 2)-1980* is based on constancy of the ac component and a short circuit power factory of 0·07 for 50 Hz.

c) When the application point is sufficiently remote electrically from rotating machines, the dc decrement is negligible and it is only necessary to verify that the short-circuit power factor is not less than 0·07 and the minimum time delay of the protective equipment is not less than one half cycle of rated frequency. In these conditions, it is sufficient that the selected circuit-breaker has a rated short-circuit breaking current not less than the initial symmetrical fault current at the point where the circuit-breaker is to be installed.

*Specification for alternating circuit-breakers: Part II Rating, Section 2 For voltages above 1 000 V ac (*first revision*).

d) In some cases, the percentage dc component may be higher than the standard values given in Fig. 1 of IS : 2516 (Part II/Sec 2)-1980*. For instance when circuit-breakers are in the vicinity of centres of generation, the ac component may decrease more quickly then in the normal case. The short-circuit current may then not have a current zero for a number of cycles. In such circumstances, the duty of the circuit-breaker may be eased, for example, by delaying its opening, or by connecting an additional damping devices with another circuit-breaker and opening the circuit-breakers in sequency. If the standard values of percentage dc component cannot be adhered to, the required percentage shall be specified in the enquiry and testing shall be subject to agreement between the manufacturer and the user [*see also* **4.3.3.6** (c) (2)].

e) The rated short-circuit current shall be selected from the standard values given in **8.2** of IS : 2516 (Part II/Sec 2)-1980*. Preferred combinations of rated short-circuit current rated voltage and rated normal current are given in Table 13 of IS : 2516 (Part II/Sec 2)-1980*.

4.3.3.6 *Selection of rated transient recovery voltage first-pole-to-clear factor and rated characteristics for short-line faults*

a) The prospective transient recovery voltage wave of the system should not exceed the reference line representing the transient recovery voltage specified for the circuit-breaker; it should cross the specified delay line close to zero voltage but should not recross it later, *see* **9** of IS : 2516 (Part II/Sec 2)-1980*.

NOTE — The transient recovery voltages which appear when breaking the highest short-circuit currents are not necessarily more severe than these which appear in other cases. For example, the rate-of-rise of transient recovery voltage may be higher when breaking smaller currents.

b) The standard values given for rated voltages of 72·5 kV and less apply to a first-pole-to-clear factor of 1·5, but for voltages exceeding 72·5 kV a choice between first-pole-to-clear factors 1·3 and 1·5 is provided. The factor 1·3 is based on a system with effectively earthed neutral where difficulty due to three-phase faults not involving earth is considered highly improbable. For applications in isolated neutral and resonent earthed systems, the first-pole-to-clear factor 1·5 should be used. For applications in system with effectively earthed neutral in cases where the probability of difficulty due to three-phase faults not involving

*Specification for alternating circuit-breakers: Part II Rating, Section 2 For voltages above 1 000 V ac (*first revision*).

earth cannot be disregarded, and the applications in systems with non-effectively earthed neutral, a first pole-to-clear factor of 1·5 may be necessary.

c) Generally it may not be necessary to consider alternative transient recovery voltages as the standard values specified cover the majority of practical cases.

More severe conditions may occur in some cases, for instance:

1) In the case of a short-circuit immediately after a transformer without any appreciable additional capacitance between the transformer and the circuit-breakers, both the peak voltage and rate-of-rise of transient recovery voltage may exceed the values specified.

2) In the case of a short-circuit on circuit-breakers in the vicinity of centres of generation, the rate-of-rise of transient recovery voltage may reach higher values than those indicated in this standard.

d) In such cases it may be necessary for special transient recovery voltage characteristics to be agreed between the manufacturer and the user.

e) When circuit-breakers are required for installations necessitating the assignment of rated short-line fault characteristics, the line on which they are to be used shall have a surge impedance and peak-factor not greater than the appropriate values given in **10.1.2** and Table 7 of IS : 2516 (Part II/Sec 2)-1980*.

f) Even in cases, where requirements of (e) above are not met, it is still possible that a standard circuit-breaker is suitable, especially if the short-circuit current of the system is less than the rated short-circuit-breaking current of the circuit breaker. This may be established by calculating the prospective transient recovery voltage for short-line faults from the rated characteristics by the method given in Appendix B of IS : 2516 (Part II/Sec 2)-1980* and comparison with the prospective transient recovery voltage derived from the actual characteristics of the system.

g) If special short-line fault characteristics are required, they shall be agreed to between the manufacturer and the user.

4.3.3.7 *Selection of out-of-phase characteristics* — In case of switching during out-of-phase conditions, the requirements of this standard where a

*Specification for alternating circuit-breakers: Part II Rating, Section 2 For voltages above 1 000 V ac (*first revision*).

rated out-of-phase breaking current as given in **14** of IS : 2516 (Part II/Sec 2)-1980* has been assigned, cater for the great majority of applications of circuit-breakers. Several circumstances would have to arise simultaneously to produce a severity in excess of those covered by the tests specified and, as switching during out-of-phase conditions is rare, it would be uneconomic to design circuit-breakers for the most extreme conditions. In locations where frequent out-of-phase switching operations are anticipated, or where for other reasons out-of-phase switching is a matter of substantial concern, the user should consider determining actual system recovery voltages. A special circuit-breaker, or one rated at a higher voltage, may sometimes be required. As an alternative solution, the severity of out-of-phase switching duty is being reduced in several systems by using relays with co-ordinated impedance sensitive elements to control the instant of power being applied to the opening release so that interruption may occur either substantially after or substantially before the instant the phase angle is 180°. Arranging relays to open both ends of a line simultaneously may be of substantial additional benefit from both a probability and a transient voltage point of view.

4.3.3.8 *Selection of rated short-circuit making current*

a) The rated short-circuit making current of a circuit-breaker is that which corresponds to the rated voltage [*see* **11** of IS : 2516 (Part II/Sec 2)-1980*].

b) The selected circuit-breaker should have a rated short-circuit making current not less than the highest peak value of fault current. Unless otherwise stated, the rated short-circuit making current is 2·5 times (that is, approximately $1{\cdot}8 \times \sqrt{2}$ times) the ac component of the rated short-circuit breaking current.

c) In some cases, for example, when induction motors are electrically close, the maximum peak value of the fault current may be more than 2·5 times the ac component of the short-circuit current. In such cases, a special design should be avoided and a standard circuit-breaker having a suitable rated short-circuit making current should be selected.

4.3.3.9 *Selection of operating sequence in service*

a) The rated operating sequence of a circuit-breaker shall be one of the operating sequence given in **13** of IS : 2516 (Part II/Sec 2)-1980*. Unless otherwise specified, the values of the time

*Specification for circuit-breakers: Part II Rating, Section 2 For valtages above 1 000 V ac (*first revision*).

intervals given in **13** of IS : 2516 (Part II/Sec 2)-1980* shall apply and the rated operating sequences provided for are:

1) 0 — 3 min — CO — 3 min CO, and

2) 0 — 0·3 s — CO — 3 min — CO (for circuit-breakers intended for rapid auto-reclosing).

The timing of 0·3 second is suitable in cases where all the three poles of the breaker trip for all types of faults.

b) if the current, the circuit-breaker is capable of breaking on auto-reclosing is less than the rated short-circuit breaking current, this shall be specified by the manufacturer.

c) When the operating sequence in service is more severe than provided for in this standard, this shall be specified by the user in his enquiry and/or order, so that the manufacturer may modify the rating of the circuit-breaker appropriately. Examples of circuit-breakers for special duty are those used for controlling arc furnaces, electrode boilers and, in certain cases, rectifier plants. Single-pole operation of a multi-pole circuit-breaker, for example, with a view to single-phase making and breaking, is also a special duty.

4.3.3.10 *Selection of rated duration of short-circuit* (*for circuit-breakers not fitted with direct overcurrent release*)

a) The standard value of rated duration of short-circuit given in **12** of IS : 2516 (Part II/Sec 2)-1980* is one second.

b) When a higher duration is necessary, the manufacturer should be consulted. However, a value of 3 seconds is recommended.

c) For short-circuit durations greater than the rated duration, the relation between current and time, unless otherwise stated by the manufacturer, is in accordance with the following formula:

$$I^2t = \text{constant}$$

4.4 Factory Built Assemblies of Switchgear and Controlgear — Under consideration.

*Specification for alternating circuit-breakers: Part II Rating, Section 2 For voltages above 1 000 V ac (*first revision*).

SECTION 4 MISCELLANEOUS GUIDELINES FOR SELECTION OF SWITCHGEAR AND CONTROLGEAR

5. OTHER CONSIDERATIONS OF SELECTION OF EQUIPMENT

5.0 The following paragraphs, provide for such considerations other than those covered in the earlier clauses; considerations of typical application for which the equipment is intended, circuitry, load, and other service conditions which have a bearing on selection.

5.1 Switches (voltages below 1 000 V) [*see* also **3.2**].

5.1.1 *Main Switchboards* — A typical feeder arrangement utilizing switches on main switchboards feeding other sub-distribution boards is shown in Fig. 7. These are generally used as isolator, composite unit of isolator and fuses or composite unit of load break switches and fuses.

5.1.1.1 *As isolator* — Switches are sometimes used on main switchboards as isolators in series with non-drawout type of circuit breakers but before them. These isolators are not supposed to make or break any current but are required to be operated off-load to disconnect the circuit-breaker from the supply for maintenance purposes. For such applications, isolators conforming to IS : 4064 (Part I)-1978* may be used. Furthermore, it should be ensured that unless the isolators are installed at a place approachable to authorized persons only, interlock is provided to safeguard that the isolator contacts open or close only after circuit breaker is in the 'off' position.

5.1.1.2 *As a composite unit of isolator and HRC fuses* — When the circuit breaker does not have a breaking capacity sufficient for the prospective short-circuit current at the point of installation, HRC fuses are used to provide back-up protection (*see* **5.2.2.2**). Under such circumstances, the isolators and fuses may be combined together with advantage as one unit to serve dual purpose of isolation of the circuit breaker and safety during replacement of the fuses.

NOTE — For co-ordination of circuit breakers and fuses *see* **5.2.2.2**.

5.1.1.3 *As composite unit of load break switches and fuses* — When a feeder is feeding other sub-distribution boards it is preferable to use a circuit-breaker but some time for economic considerations switch-fuse units are used instead of circuit-breaker where considered adequate on duty consideration. A circuit-breaker shall be preferred wherever frequent operations are involved and if remote operations are envisaged. While the fuses protect the cable, the switch is used to make and break the circuit.

*Specification for air-break switches, air-break disconnectors, air-break switch-disconnectors and fuse combination units for voltages not exceeding 1 000 V ac or 1 200 V dc: Part 1 General requirements (*first revision*).

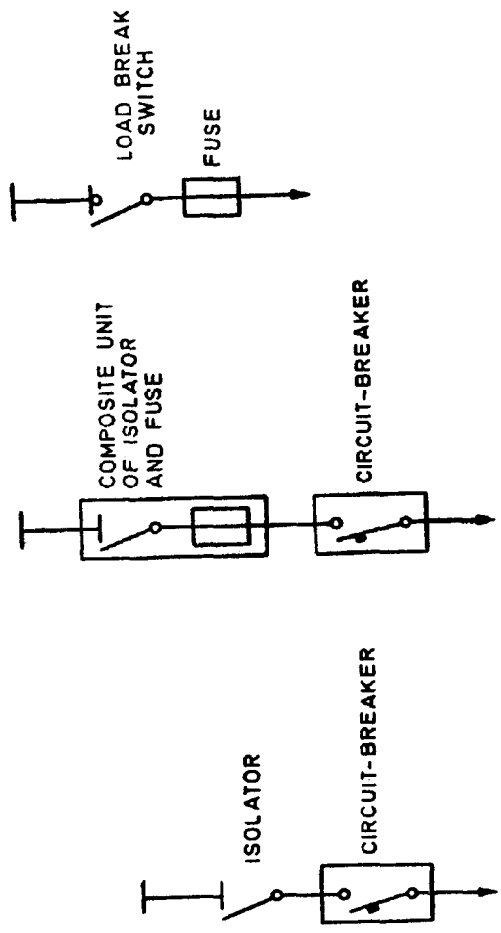

7A Isolator 7B A composite unit of isolator and fuse 7C Load break switch with fuse

FIG. 7 APPLICATION OF SWITCH ON MAIN SWITCHBOARD

5.1.2 Load Feeders

5.1.2.1 *Switch to be operated on 'no load'* — If a switch is intended to be operated only on 'No Load', then it can only serve the purpose of isolating other equipment from the supply after the load has been switched off by some other device. Under these conditions, an isolator would prove most economical although any other type of switch could also be used. If isolators are used care should be taken that either they are interlocked with the main load switching device like circuit-breaker, starter, etc (*see* Fig. 8A) so that they can only be operated after the main device is in the off position or they should be approachable only to authorized persons.

5.1.2.2 *Feeders with steady load* — In case the load is steady, such as for light and power circuits, all that is necessary is to consider the power factor of the circuit. If the circuit is fairly non-inductive (power-factor greater than 0·8), then a switch conforming to ac 21 category will do; otherwise, either switches of other categories IS : 4064 (Part I)-1978* or motor control switch will have to be selected.

5.1.2.3 *Feeders with fluctuating load* — The typical fluctuating loads are motor or condenser feeders where the switches are used either as motor starter or as isolator in the motor feeder.

a) *As motor starter* — When a switch is used as a motor starter, it should comply with the requirement of IS : 4064 (Part II)-1978†. Guidance may be taken from **3.4** for the proper selection as a starter.

For very small motors (generally less than 1 kW), accurate protection of the motor is sometimes dispensed with and fuses are used together with starter as a rough overload and short-circuit protection (*see* Fig. 8B). This is, however, not encouraged. An improvement upon this circuit is on the incoming side and motor starters for the individual outgoing feeders as shown in Fig. 8C. For bigger motors, starter with an overload protective device should be used for each individual motor (*see* Fig. 8D) or a combination of circuit-breaker with star-delta, reversing or simlar purposes motor starters made as shown in Fig. 8E. Fuses are required before the circuit breaker if the short circuit level is higher the breaking capaciy of the circuit breaker.

---

*Specification for air-break switches, air-break disconnectors, air-break switch-disconnectors and fuse-combination units for voltages not exceeding 1 000 V ac or 1 200 V dc : Part I General requirements (*first revision*).

†Specification for air-break switches, air-break disconnectors, air-break switch disconnectors and fuse-combination units for voltages not exceeding 1 000 V ac or 1 200 V dc : Part II Specific requirements for the direct switching of individual motors (*first revision*).

b) *As isolating switch* — A typical circuit of a motor feeder as is commonly adopted is shown in Fig. 8F. The starter is there to switch ON and OFF the motor. The switch is intended to ease isolation for carrying out the maintenance work on the motor and the starter. The switch may also sometimes be called upon to break the circuit in emergency. The fuses are used for short-circuit protection and they may be combined with the switch.

The provision of the switch as means of isolation in a motor feeder should be studied from the following aspects:

1) The frequency at which maintenance work is required to be carried out,
2) The extent of safety desired, and
3) Cost involved.

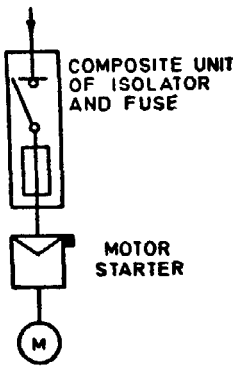

8A

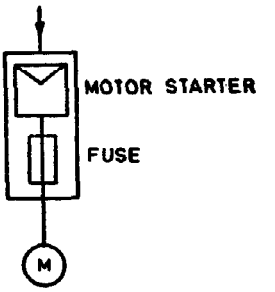

8B

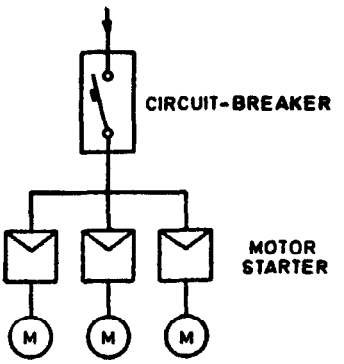

8C

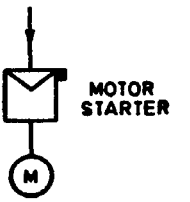

8D

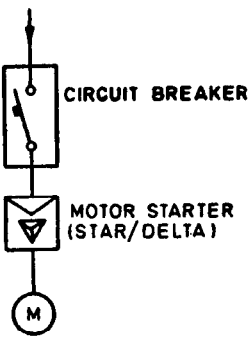

8E

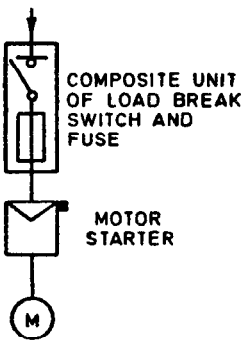

8F

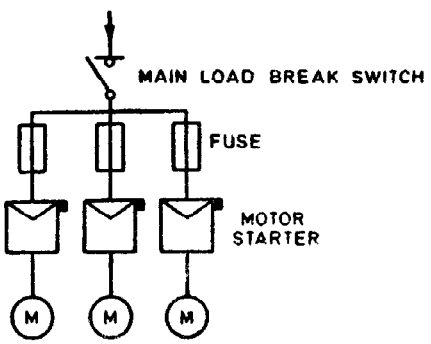

8G

FIG. 8 TYPICAL ARRANGEMENTS OF SWITCHES IN MOTOR FEEDERS

5.1.2.4 *Condenser load* — The current taken by capacitors leads the voltage almost by 90°C. Hence the selection of the switches needs careful consideration as it is liable to be effected by the active recovery voltage during the switching period. When a capacitor is short circuited the peak value of the discharge current is high, but decreases rapidly since the frequency is high and the time constant is low. Generally, standard switches may be used with suitable derating. The extent to which the derating has to be applied is to be obtained from the manufacturer of the switches.

5.2 Fuses (Voltages Below 1 000 V) — *See also* **3.1.**

5.2.1 *General* — A fuse should be selected such that:

a) it does not operate due to momentary overload,

b) it operates only in case of excessive sustained overloads or short-circuit, and

c) it offers proper discrimination.

It should also be borne in mind that due to higher fusing factor, the fuse should generally be treated as a means for short-circuit protection and other devices having relays releases with accurate operation should be employed for the overload protection when the connected equipment does not have any overload capacity.

The considerations necessary for the selection of general purpose fuses designed for ordinary types of loads are explained in **5.2.2** to **5.2.5.** Fuses for special types of loads like rectifiers, railways or mines requirements, should be selected in consultation with the manufacturer.

5.2.2 *Radial Feeders with Steady Load* — In such cases, fuses are generally the only means of protection of the connected cables and wires. The life of cables reduces very considerably even with slight sustained overload. It should, therefore, be kept in mind that the cable has sufficient overload capacity in relation with the minimum non-fusing factor of the fuse selected.

5.2.2.1 *Co-ordination between two fuses in series* — It is a good practice to provide fuses at the point where the cross-section of the cables decreases. There may, therefore, be three and four fuses behind one another in a radial feeder without any other protective device in between (*see* Fig. 9A). Proper selectivity is, therefore, necessary so that in the event of a fault, only the fuse nearest to the fault operates and the others remain intact.

Since in a radial feeder, almost the same value of the fault current flows through all the fuses in series, it is clear that all such fuses should not have the same rating. Fig. 9B shows the typical characteristic curves of the cartridge fuses. These curves are drawn between the pre-arcing time and the prospective short-circuit current. There is a considerable difference between the pre-arcing time of two consecutive fuses at lower prospective short-circuit currents. For close discrimination in overload range, it is generally sufficient. When the two fuses have a difference of 25 percent between their pre-arcing time. In the range of higher prospective short-circuit currents, if the pre-arcing time of the minor fuse is less than 0·02 second, two fuses connected in series would offer discriminate operation only if the total I^2t value of the minor fuse is less

than the pre-arcing I^2t of the major fuse [*see* Fig. 9C]. It should be further borne in mind that:

a) due to the manufacturing tolerances, the pre-arcing time of the fuse is not an exact value, but varies to some extent; and

b) as soon as the arcing takes place in the minor fuses the current in the circuit reduces very sharply due to the arc resistance and thus the major fuses are not affected to the same extent during the pre-arcing time of the minor fuse.

The manufacturers should therefore be consulted for the proper rating of the fuses which would offer discriminate operation between one another for the prospective short-circuit currents expected at the point of installation. As a rough guide, a ratio of 1·5 between the rating of the major and minor fuses may be expected to give discriminate operation for fault levels up to 40 kA.

5.2.2.2 *Co-ordination between a circuit-breaker and a fuse on the incoming side* — When fuses are used for the back-up protection of circuit-breakers, link-type fuses are normally used for this purpose. The circuit-breakers are usually provided with overload and short-circuit releases and their operating times are so co-ordinated by the supplier that no damage is caused to the circuit-breaker for the duration of short-circuit current according to their tripping time. For the co-ordinated selection of the fuse, the following requirements should therefore be fulfilled:

a) For normal overloads, the circuit-breaker should be tripped by its own overload relay and the fuse should not operate;

b) Short-circuit release should trip the circuit-breaker for all short-circuit currents within its breaking capacity and the fuse should not operate; and

c) For all short-circuit currents in excess of breaking capacity, the fuse should operate sufficiently early so as to prevent opening of the circuit breaker on currents in excess of its breaking capacity and damage due to the thermal and dynamic effects.

A well co-ordinated combination in the range of heavy short-circuit current is shown in Fig. 10. It should be ensured that:

a) the rating of the fuse is as high as possible so that the characteristic of the fuse lies as far away as possible (point No. 1 in Fig. 10) from the point of intersection of overload and short-circuit release characteristic (*see also* **5.2.4.1**). This fulfills the requirements of **5.2.2.2** (a).

b) the fuse characteristic and the short-circuit release characteristic intersect at a point (No. 2 in Fig. 10), within the breaking capacity of the circuit-breaker. This fulfills the requirement's of **5.2.2.2** (b); and

c) the total operating time of the fuse is less than the tripping delay of the circuit-breaker for short-circuit currents equal to the breaking capacity of the circuit-breaker. This fulfills the requirements of **5.2.2.2** (c).

It may be seen that the above combination gives ideal protection. Accurate characteristic curves for circuit-breaker, short-circuit releases, etc, are generally not available and it is recommended that manufacturers should be consulted.

The use of fuses of maximum permissible rating has the following advantages:

a) *Prevention of indiscriminate operation under overloads* — The fuse characteristics lies much above the overload characteristic of the bimetal release and, as such, chances of indiscriminate operation under normal overload conditions are totally elimated;

b) *Less frequent replacement of fuses* — The fuse does not operate at short-circuit currents less than the breaking capacity of the circuit-breaker. Frequent operation of the fuses is thus prevented and there is, therefore, less expenditure and less idle time;

c) *Break of circuit on all the three phases* — The combination results in ideal conditions of discriminate operation ensuring the tripping of the circuit-breaker in all cases 'On-load' within its breaking capacity and ' Off-load ' for currents in excess. The circuit, therefore, breaks on all three phases and the occurrence of short-circuits is indicated;

d) *Interchangeability and less number of spares* — Usually the same fuse rating may be used for the back-up protection of different feeders having settings of the bimetal and short-circuit releases which differ greatly.

5.2.2.3 *Co-ordination between a circuit-breaker and a fuse on the outgoing side* — It is quite customary to provide on the distribution boards only circuit-breakers for incoming feeders and fuses for outgoing feeders as shown in Fig. 11. In such a case, the fuse has to operate for all the faults on the outgoing feeders and the circuit-breaker should not trip. The short-circuit release provided on the circuit-breaker should be of time delayed type as otherwise the circuit-breaker is liable to trip due to the short-circuit current impulse even of a short duration. As a rough guide, a time lag of between 50 to 150 millisecond should be provided in the characteristic of the fuse-link and the short-circuit release for the expected short-circuit current as shown in Fig. 11.

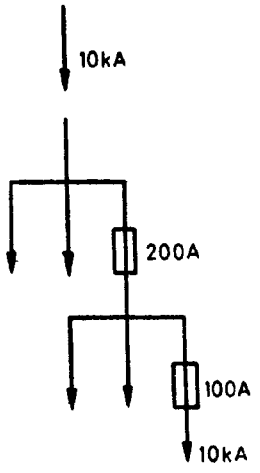

9A Radial Feeders Protected by Fuses

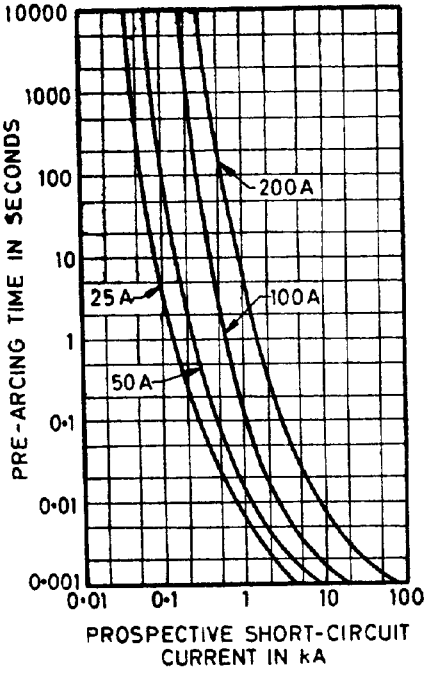

9B Typical Characteristic Curves of Cartridge Fuses of Different Ratings

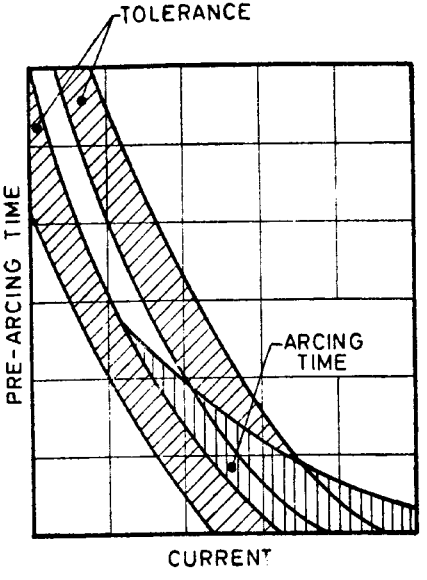

9C Discriminate Operation Offered by Two Fuses in Series

FIG. 9 CO-ORDINATION BETWEEN TWO FUSES IN SERIES IN A RADIAL FEEDER

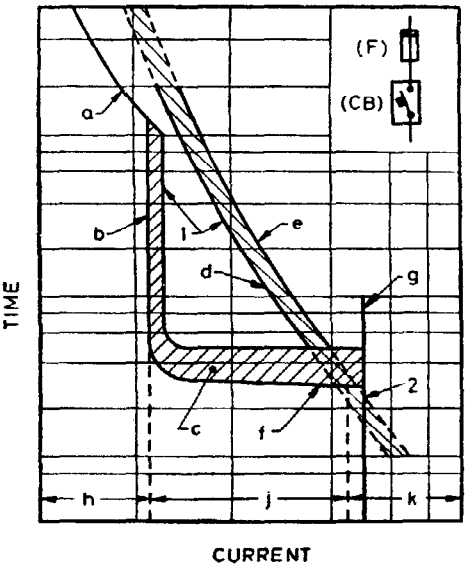

a — Overload relay characteristic of circuit-breaker
b — Short-circuit release characteristic of circuit-breaker
c — Arcing time characteristic of circuit-breaker
d — Pre-arcing time characteristic of fuse
e — Total time characteristic of fuse
f — Tripping delay of circuit-breaker
g — Breaking capacity of circuit-breaker
h — Thermal release
j — Instantaneous short-circuit release
k — Back-up fuse

FIG. 10 CO-ORDINATION BETWEEN A FUSE (*F*) AND A CIRCUIT-BREAKER (*CB*); FUSE PRECEDING THE CIRCUIT-BREAKER

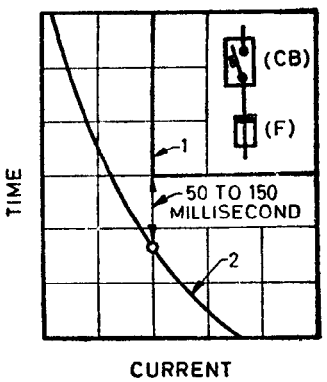

1 — Short circuit release characteristic curve of circuit-breaker
2 — Characteristic of fuse

FIG. 11 CO-ORDINATION BETWEEN A FUSE (*F*) AND A CIRCUIT-BREAKER (*CB*); CIRCUIT-BREAKER PRECEDING THE FUSE

5.2.3 *Meshed Feeders with Steady Load* — Unlike radial feeders, in the mesh connected circuits, the fuses have to be kept of the same rating although in case of a fault, the short-circuit current in the different feeders may be different. In Fig. 12 is shown a junction point. In case of a short-circuit the total short-circuit current $I(1)$ is the sum of the short-circuit currents $I(2)$, $I(3)$ and $I(4)$.

If the short-circuit current had been distributed equally, the fuses (2), (3) and (4) would all be carrying one-third of the total current in fuse (1) and, as such, proper discrimination may be expected. But depending upon the impedance within the different circuits, it is also possible that the short-circuit currents in any part, for example, $I(2)$ may be about 80 to 90 percent of the total current $I(1)$. This becomes a critical stage and it may happen that both the fuses (1) and (2) operate simultaneously.

In case of meshed circuits, it is, therefore, important to know the ratio of I (Part)/I (total) of the fuses which would still give discrimination at expected prospective short-circuit current. Fuses are available which are even discriminative at a ratio of above 80 to 90 percent depending upon the rating of the fuse and the short-circuit current. These details should be obtained from the manufacturer.

5.2.4 *Feeders with Fluctuating Loads — Motor Feeders* — Heavy starting current are usually associated with the motor feeders. The rating of the fuse has, therefore, to be high enough that it does not operate due to

normal starting currents. The fuse so selected may not offer adequate overload protection to the motors and, therefore, other devices, such as bimetal relays or releases, should be used for this purpose. The fuses for motor feeders are hence used to protect the motors and the starting gear against short-circuits only.

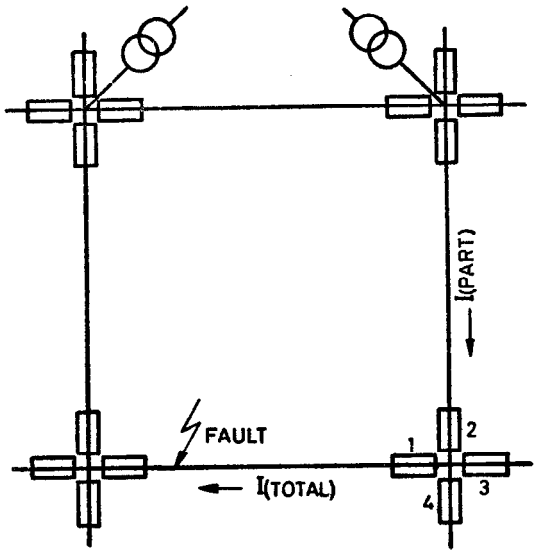

FIG. 12 DISTRIBUTION OF SHORT-CIRCUIT CURRENTS IN A MESHED NETWORK

5.2.4.1 *Co-ordination of fuses with motor starters* [*see also Appendix A of IS : 8544 (Part I)-1977**] — It is necessary to co-ordinate the characteristics of the fuse provided for the short-circuit protection and overload relay or release provided on the motor starter (contactor) so that the following requirements are fulfilled:

a) Fuses does not operate and the overload protection device also does not operate during the starting of the motor. Further the fuse should not operate for such overloads as may be handled by overload protection device.

b) The fuse disconnects the supply to the motor starter sufficiently early before the starter or overload protection device is damaged due to the thermal and dynamic effects of excessive currents.

*Specification for motor starters for voltages not exceeding 1 000 V: Part I Direct-on-line ac starters.

c) The fuse should disconnect the supply sufficiently early so that the motor starter is not required to break the current in excess of its breaking capacity.

In order to arrive at the proper co-ordination, the following should be known:

1) Cold condition characteristics of the overload protection device (curve 1 in Fig. 13),

2) The maximum thermal strength of the combination of motor starter and the overload protection device (point *R* in Fig. 13),

3) Maximum breaking capacity of the starter (point *T* in Fig. 13),

4) Pre-arcing time characteristics of the fuse (curve 2 in Fig. 13), and

5) Total-time characteristics of the fuse (curve 3 in Fig. 13).

If the combination is properly co-ordinated as shown in Fig. 13 then:

1) point *A*, that is, point of intersection of curves (1) and (2) should lie above and to the right of the point *B* which depends upon the starting current and the starting time of the motor (5 times the rated current *I* for 5 seconds in Fig. 13). This would fulfill the requirements of **5.2.4.1** (a);

2) Point *M*, that is, point of intersection of curves (1) and (3) should lie to the left of point *R*. This would fulfill the requirement of **5.2.4.1** (b); and

3) Point *N*, that is, point of intersection of curve (3) and vertical ordinate from point *T* should lie below the point *P*, that is, point of intersection of curve (1) and the vertical ordinate from point *T*. This would fulfill the requirement of **5.2.4.1** (c).

The manufacturers of motor starters should supply the starter as well as the overload protection device so co-ordinated that the overload protection device would trip the starter (or contactor) such that neither the starter nor the overload device itself is damaged. The consumer has, therefore, mainly to worry about the proper co-ordination of the fuse and in the absence of full information available on the above lines, the manufacturers should be consulted for the appropriate rating of the fuse.

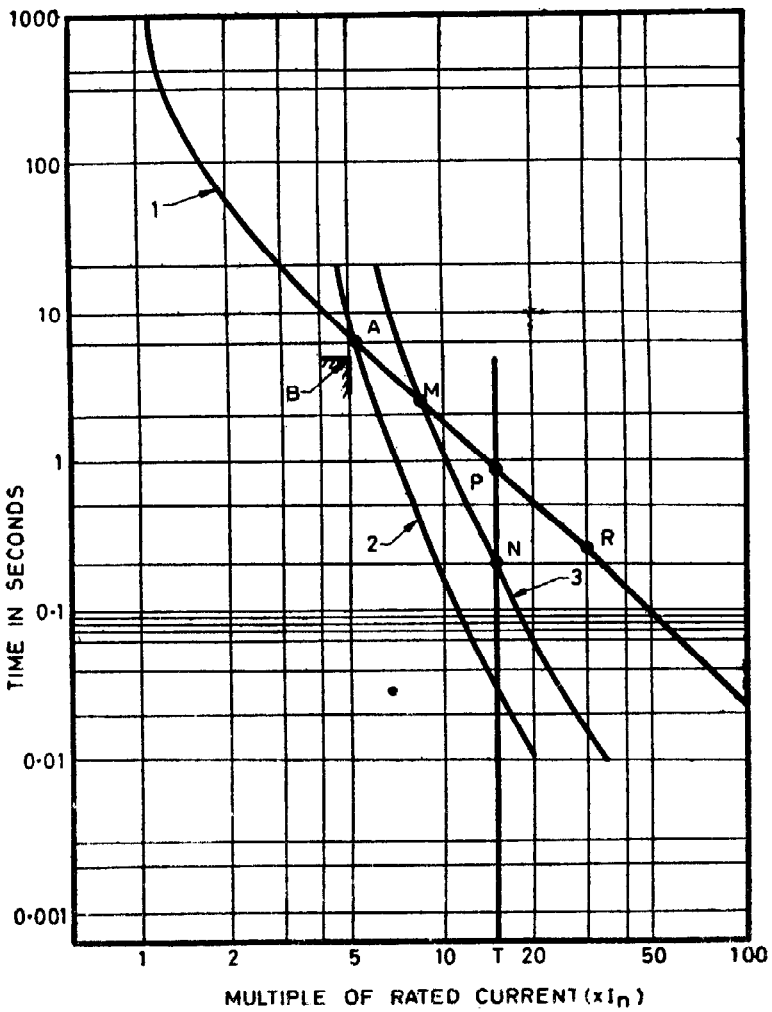

FIG. 13 CO-RELATION BETWEEN CHARACTERISTICS OF THERMAL RELAY AND BACK-UP FUSES

5.2.4.2 *Co-ordination of fuses and circuit-breakers* [*see also 9 of IS : 2516 (Parts I and II)-1977**] — Circuit-breakers are sometimes used with advantage for the starting of the motors. The considerations for co-ordination with the fuse are the same as described under **5.2.2.**

5.2.4.3 It would be seen from the above that for the sake of proper discrimination, only HRC cartridge fuses should be used for the motor feeders. Unlike HRC fuses, there is no possibility for the indication of the operation of the rewirable fuse-element either and unwarranted operation of the rewirable fuse is often responsible for single-phasing faults of the motors.

It is also important to ensure that fuse selected from the above considerations offers adequate protection against excess currents to the connection cables (or wires) between the fuse and the starter and the motor. It may be sometimes necessary either to select the cables of higher cross-section or reduce the rating of the fuse, if that should be possible.

5.2.5 *Feeders with Fluctuating Loads — Transformers Feeders, Capacitor Feeders, etc* — For transformers, capacitors battery chargers and fluorescent lighting circuits, the effect of high switching surges should be considered. The manufacturers should be consulted for the proper rating of the fuse although as a rough guide, the rating of about 50 percent greater than the normal current may be taken.

5.2.5.1 In case of transformer feeders, it also becomes necessary to coordinate the characteristics of the high voltage and low voltage fuses. It should be borne in mind that while the fuse on the low voltage side protects the transformer from overload due to the faults on the low voltage system, the high voltage fuse takes care of the faults inside the transformer.

Example:

Assuming a transformer rated for 160 kVA, 11/0-415 kV with an impedance of 4·75 percent, the rated low voltage current would be 225 A and the rated high voltage current would be 8A. The rated current of the fuse on the low voltage side would, therefore, be 200 A, in line with **5.2.2.** Taking care of the switching surges, the fuse on high voltage side should be of rating much more than 8A and it can be 15A depending upon the co-ordination as shown in Fig. 14.

The maximum short-circuit current should be taken as:

$$160 \times \frac{100 \times 1}{4{\cdot}75 \times \sqrt{3} \times 0{\cdot}415} = 4{\cdot}66 \text{ kA}$$

*Specification for alternating current circuit-breakers: Parts I and II Requirements and tests.

Considering a case of infinite bus the above arrangement will ensure that for all short-circuit currents up to 4·66 kA on the low voltage side, the low voltage fuse operated earlier than the high voltage fuse.

While comparing the characteristics, care should be taken that pre-arcing I^2t characteristics of the high voltage fuses are less than the total I^2t characteristics of the low voltage fuses.

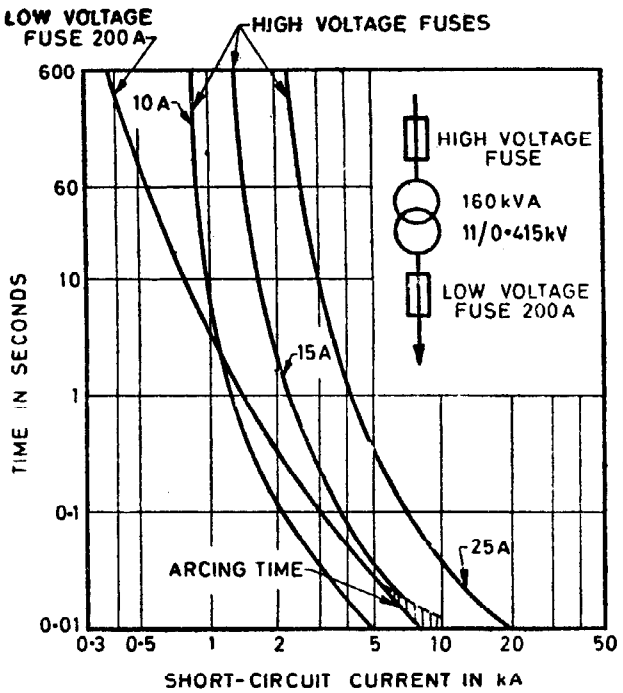

FIG. 14 CO-ORDINATION BETWEEN LOW VOLTAGE AND HIGH VOLTAGE FUSES

5.3 Motor Starters (Voltages Below 1 000 V) (*see also* 3.4)

5.3.0 *General Guidance for Common Types of Starters*

5.3.0.1 Several types of starters with different combinations for various applications may be used. Although various factors, as described earlier in detail, should be kept in mind for accurate selection, Table 1 may serve as a general guidance for selection of starters.

TABLE 1 GUIDANCE ON SELECTION OF STARTERS FOR VARIOUS APPLICATIONS

(*Clause* 5.3.0.1)

Sl No.	Type of Application	Type of Control	Type of Starter	Switching Operations per Hour
(1)	(2)	(3)	(4)	(5)
i)	Direct-on-line starting and control of 3-phase induction motors	Manually-operated units	On-Off and system selector switch or starter	Up to about 150
			Pole charging switch or starter	Up to about 150
			Motor-protection circuit-breaker	Up to about 30
			Remote-operated motor-protection circuit-breaker	Up to about 30
		Remote-operated units	Air-break or oil-immersed contactor-starter with over-load relay	Up to about 30
			Air-break contactor starter	Up to about 1 200
ii)	Star-delta starting of 3-phase induction motors	Manually-operated units	Manually operated star-delta starter	
		Remote-operated units (with automatic changeover from star to delta)	Automatic contactor type star-delta starter	
iii)	Starting and speed control of 3-phase slipring motors	Manually-operated (starting)	Face-plate starter in conjunction with motor-protection circuit-breaker or contactor	Up to about 30
			Oil-immersed drum starter in conjunction with motor-protection circuit-breaker or contactor if required	
			Drum-type starter in conjunction with resistor and motor-protection circuit-breakers or contactor	Up to about 30

(*Continued*)

TABLE 1 GUIDANCE ON SELECTION OF STARTERS FOR VARIOUS APPLICATIONS — *Contd*

Sl No.	Type of Application	Type of Control	Type of Starter	Switching Operations Per Hour
(1)	(2)	(3)	(4)	(5)
		Manually-Operated units (starting and speed setting)	Drum-type starter in conjunction with resistor and motor-protection circuit-breakers or contactor	Up to about 150
iv)	Switching of auxiliary circuit	Manually-operated units	Momentary-contact control station (including food-switch)	
			Twist switch (maintained contact operation)	
			Twist switch (momentary contact operation)	
		Mechanically operated units	Momentary-contact limit switch	
v)	Overcurrent and under-voltage protection	Short circuit line protection	Fuse	
			Switch fuse unit	
			Motor protection circuit-breaker	
		Motor overload protection	Motor protection circuit-breaker	
			Motor protection circuit-breaker (in conjunction with fuse, if required)	
			Contactor with overload relays (in conjunction with fuse)	
		Undervoltage (instantaneous)	Protection circuit-breaker (with under voltage release)	
			Contactor with holding contacts	
		Undervoltage (time lag)	Protection circuit-breaker (with time lag release)	
			Contact with holding contacts	

5.3.1 *Mode of Operation of Motor Starters*

5.3.1.0 *General* — The starters may either be manually operated or may have automatic control through auxiliary devices, such as, push buttons, limit switches, float switches, etc. Manual control may be adopted with a limited frequency of operation. Automatic control not only gives the possibility of greater frequency of operation but also permits installation of main switching equipment away from the actual drives.

Manually operated switch starters have been in vogue due to the simplicity of construction and may be used when remote control and automation are not required. Many a time motor protection circuit-breakers are also used as motor starters with advantage as they incorporate short-circuit protection as well, provided the short-circuit protection has sufficient breaking capacity thus extra means, such as, fuses which are required in case of switch or contactor starters need not be provided. While using motor protection circuit-breakers without back-up fuses, it should be examined whether the short-circuit level at the place of installation is within the short-circuit capacity of the motor protection circuit-breakers as also if the switching duty required may be catered by the motor protection circuit-breaker.

Manual starters may be used where operation is limited to lesser frequency of operation and where automatic operation is not required. Closing and opening is done by hand except in case of overload release. The contactor starters may be used where either remote or repeated operation is required. They permit sufficient flexibility of connection.

5.3.1.1 *Motor switches* — They are available in a variety of executions, such as, ON-OFF switches, system selector switches, pole-changing switches, star-delta switches.

a) The distinguishing feature of these switches is that they are usually operated by hand and that, depending on the particular application, they have two or more switching positions for closing, opening or transferring circuits.

b) The making and breaking capacity of the switches corresponds to the starting current of the motors. The switches are generally suitable for continuously closed duty and for intermittent duty up to 150 switching operations per hour. They are used primarily for the direct closing, opening and transferring of motor circuits without having to interrupt short-circuit currents which are interrupted by circuit-breakers or fuses.

5.3.1.2 *Motor-protection circuit-breakers* — Circuit-breakers are distinguished by their ability to interrupt short-circuit currents within specified

values. These are provided with trip-free latch mechanism and trips. A circuit-breaker may be opened either manually or by automatic release.

a) Both overcurrent and undervoltage release and other protectiv features may be incorporated. When the supervised electric variable (current or voltage) deviates from the rated value by more than a certain amount, the breaker is automatically tripped. Auxiliary trips for remote tripping may also be provided.

b) The circuit-breakers are suitable for continuously closed duty up to switching frequency of 30 switching operations per hour. They are designed either for manual or remote operations. In addition to the switching ON and OFF of motors, they are also used for protecting the system, motor and switchgear from overload, short-circuits, undervoltage and voltage failures. The making and breaking capacity is selected accordingly.

HRC cartridge fuses may have to be used for back-up protection if the circuit-breakers do not have sufficient rupturing (breaking) capacity according to the short-circuit level at the place of installation.

5.3.1.3 *Contactors* — Contactors are distinguished by powen mechanism (electro-magnets) which closes the contactor and keeps it ir its closed position as long as the operating power is maintained (magnet energized). When the magnet becomes de-energized, the contacts open.

a) Their making and breaking capacity corresponds to the starting current of the motors. The contactors are suitable for continuously closed duty and for intermittent duty up to 1 200 switching operations per hour.

b) Contactors are used chiefly for automatic electric control systems or for remote switching of motors. Contactors require either fuses or circuit-breakers for short-circuit protection.

5.3.2 *Combination of Switching Devices*

5.3.2.1 *Equipment in a motor feeder* — Taking into consideration the various types of switching devices and necessity for overload and short-circuit protection together with means of isolation, there are various combinations possible for the motor feeders. The usual arrangements are shown in Fig. 15 and have been explained below:

a) The arrangement *a* shown in Fig. 15 is very commonly adopted for individual motor feeders. The overload protection is provided on the starter. The short-circuit protection is provided by the

fuses. The switch is intended as means of isolation. The switch and the fuse may be combined in one housing. Sometimes, the switch or both the switch and the fuse are installed in the same housing as the starter. If the fuses are outside, then it should be ensured that it is possible to remove them even when energized but off load, for example, by means of insulated fuse carrier or fuse pullers.

b) The arrangement *b* shown in Fig. 15 is only a modification of *a* and is usually adopted when a number of motor feeders are fed from a common fuse distribution board. This system is usually adopted for motor control centres. A common isolating device is provided in the incoming supply to the fuse board for the sake of economy.

c) In the arrangement *a* shown in Fig. 15 a motor protection circuit-breaker is used as motor starter. The overload and short-circuit protection is provided on the circuit-breakers. This method may be used only for the direct-on-line starting, but has the advantage that circuit-breaker is always available ready for switching-in after the fault and does not require replacement as in case of fuses. If fuses are used as back-up protection to the circuit-breakers then they may also be used for isolation if they are capable of removal even when energized; otherwise, a switch may have to be used.

d) In the arrangement *b* shown in Fig. 15 the starter is without any protective devices and takes the form of a motor control switch or a contactor or combination of contactors. The circuit-breaker acts as means of isolation and additionally offers overload and short-circuit protection for the feeder through its releases. This arrangement proves quite ideal and economical for starter combinations, like star-delta or 2-speed at places where manual control through switch may be accepted.

NOTE — If a motor protection circuit-breaker is used as a motor starter it should be verified that it is of adequate short-circuit capacity to cope with the system fault-level at that point; otherwise fuses of adequate short-circuit capacity to cope with the system fault-level at that point or fuses of adequate short-circuit capacity should be used along with the circuit-breakers.

5.3.3 For the purposes of selection, details of the special features of different motor starters are provided in Appendix A. This provides guidance on their characteristics, the circuitry in which they are employed, with a comparative analysis on their relative performance.

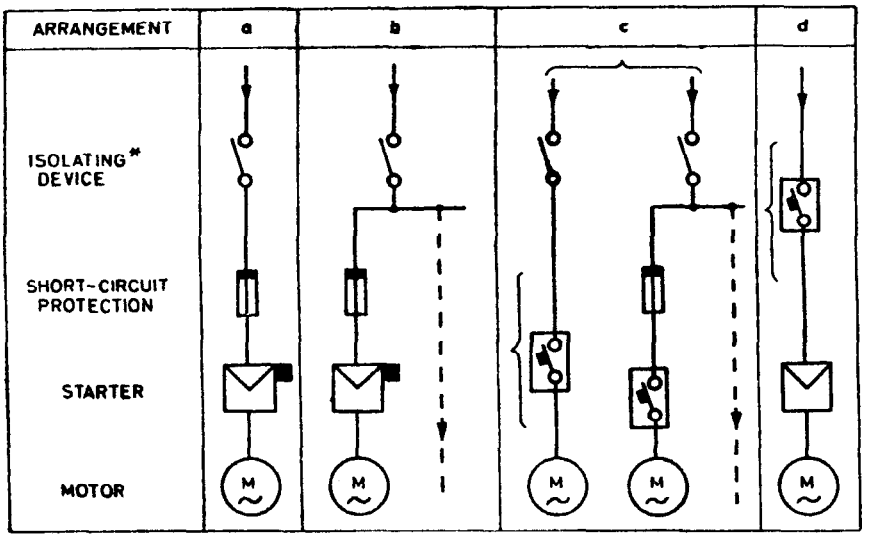

*Another isolating device may have to be provided near the motor if the starter is away from the motor.

FIG. 15 TYPICAL ARRANGEMENTS OF EQUIPMENT IN MOTOR FEEDERS

APPENDIX A

(*Clause* 5.3.3)

SPECIAL FEATURES OF DIFFERENT MOTOR STARTERS

(*Under Consideration*)

(*Continued from page* 2)

Panel for Selection, Installation and Maintenance Switchgear and Controlgear, ETDC 20/P25

Members	*Representing*
SHRI O. P. ANAND	Delhi Electric Supply Undertaking, New Delhi
SHRI JAGMOHAN (*Alternate*)	
SHRI C. R. BALASUBRAMANIAN	The English Electric Company of India Ltd Madras
*SHRI M. SESHADRI (*Alternate*)	
SHRI DEVENDER NATH	Larsen & Toubro Limited, Bombay
SHRI P. D. JAHAGIRDAR	Maharashtra State Electricity Board, Bombay
SHRI JAVEED AHMED	NGEF Ltd, Bangalore
SHRI I. NARAYANA RAO (*Alternate*)	
DR T. C. SIDHAN	Chief Electrical Inspector to the Government c Kerala, Trivandrum
PROF G. RAVINDRAN NAIR (*Alternate*)	
SHRI SYED KHADER MOHUDDIN	Kernataka Electricity Board, Bangalore
SHRI R. SUBBARAO	Bharat Heavy Electricals Ltd, Secunderabad
SHRI K. C. LAHARI (*Alternate*)	
SHRI G. N. THADANI	Engineers India Ltd, New Delhi
SHRI M. K. DAS (*Alternate*)	
SHRI A. S. UDHALIKAR	Hindustan Brown Boveri Ltd, Bombay
SHRI S. R. POTNIS (*Alternate*)	

*Shri M. Seshadri, chaired the Panel Meetings.

BUREAU OF INDIAN STANDARDS

Headquarters:
Manak Bhavan, 9 Bahadur Shah Zafar Marg, NEW DELHI 110002
Telephones : 331 01 31, 331 13 75 Telegrams : Manaksanstha
(Common to all offices)

Regional Offices:		*Telephones*
Central	: Manak Bhavan, 9 Bahadur Shah Zafar Marg, NEW DELHI-110002	331 01 31 331 13 75
*Eastern	: 1/14 C.I.T. Scheme VII M, V. I. P. Road, Maniktola, CALCUTTA 700054	36 24 99
Northern	: SCO 445-446, Sector 35-C, CHANDIGARH 160036	2 18 43 3 16 41
Southern	: C. I. T. Campus, MADRAS 600113	41 24 42 41 25 19 41 29 16
†Western	: Manakalaya, E9 MIDC, Marol, Andheri (East), BOMBAY 400093	6 32 92 95

Branch Offices:

'Pushpak' Nurmohamed Shaikh Marg, Khanpur, AHMEDABAD 380001	2 63 48 2 63 49
‡Peenya Industrial Area, 1st Stage, Bangalore Tumkur Road BANGALORE 560058	38 49 55 38 49 56
Gangotri Complex, 5th Floor, Bhadbhada Road, T. T. Nagar, BHOPAL 462003	6 67 16
Plot No. 82/83, Lewis Road, BHUBANESHWAR 751002	5 36 27
53/5, Ward No. 29, R. G. Barua Road, 5th Byelane, GUWAHATI 781003	3 31 77
5-8-56C L. N. Gupta Marg (Nampally Station Road), HYDERABAD 500001	23 10 83
R14 Yudhister Marg, C Scheme, JAIPUR 302005	6 34 71 6 98 32
117/418 B Sarvodaya Nagar, KANPUR 208005	21 68 76 21 82 92
Patliputra Industrial Estate, PATNA 800013	6 23 05
T.C. No. 14/1421, University P.O., Palayam TRIVANDRUM 695035	6 21 04 6 21 17

Inspection Office (With Sale Point) :

Pushpanjali, 1st Floor, 205-A West High Court Road, Shankar Nagar Square, NAGPUR 440010	2 51 71
Institution of Engineers (India) Building, 1332 Shivaji Nagar, PUNE 411005	5 24 35

*Sales Office in Calcutta is at 5 Chowringhee Approach, P.O. Princep Street, Calcutta 700072 — 27 68 00

†Sales Office in Bombay is at Novelty Chambers, Grant Road, Bombay 400007 — 89 65 28

‡Sales Office in Bangalore is at Unity Building, Narasimharaja Square Bangalore 560002 — 22 36 71

Printed at Simco Printing Press, Delhi, India