STUDY MATERIAL FOR ELECTRICAL SUPERVISOR LICENSE EXAMS (DOMESTIC AND INDUSTRIAL)

Solved MCQs and Question Papers from State Electricity Board Exams for Supervisor License (Supervisor Certificate of Competency)

SUDESH K JAIN



Click to Buy
Amazon | Flipkart | Pothi Store

Indian Standard

CODE OF PRACTICE FOR SELECTION, INSTALLATION AND MAINTENANCE OF TRANSFORMERS

PART II INSTALLATION

0. FOREWORD

0.1 This Indian Standard was adopted by the Indian Standards Institution on 25 November 1981, after the draft finalized by the Code of Practice for Power Installation and Maintenance Sectional Committee had been approved by the Electrotechnical Division Council.

0.2 The code of practice on installation and maintenance of transformers was originally published in 1961 as IS : 1886, intended as a guide to installation engineers, contractors and others engaged in the installation and maintenance of power and distribution transformers. It was made up-to-date subsequently in 1967, with additional details regarding internal inspection of transformers. Apart from the information concerning transformers themselves, the code covered ancillary work such as ventilation, cabling and isolation of transformers.

0.3 The present version of the code is being brought out to include additional details on criteria for selection of transformers, transportation to the point of installation, taking also into view the latest thinking on the methods of supervision and maintenance of insulating oil in service.

The present code does not cover special purpose transformers and instrument transformers. It is however, intended to supplement the details for the same at a future date.

0.4 This standard closely follows the earlier version, though currently being presented in three parts mainly in order to identify information and to consolidate them in functionally coherent sections. This standard is hence brought out in three parts, viz:

Part I Selection (under preparation)

Part II Installation

Part III Maintenance

All parts shall hence be read in conjunction. This standard (Part II) partly supersedes the provisions of IS : 1886-1967*, which will be withdrawn when all the parts are made available.

*Code of practice for installation and maintenance of transformers (*first revision*).

0.5 In view of the fact that this code is required to be in conformity with the prevailing statutory regulations in the country, reference to the relevant provisions of the Indian Electricity Rules, 1956, has been made at appropriate places.

0.6 In the preparation of this code, considerable assistance has been derived from the following:

IS : 6600-1972 Guide for loading of oil-immersed transformers

IS : 8478-1977 Application guide for on-load tap-changers

IS : 4146-1967 Application guide for voltage transformers

IS : 4201-1967 Application guide for current transformers

'Specification for power and distribution transformers. Section K Erection, maintenance and commissioning manual' issued by the Central Board of Irrigation and Power.

0.7 For the purpose of deciding whether a particular requirement of this standard is complied with, the final value, observed or calculated, expressing the result of a test, shall be rounded off in accordance with IS : 2-1960*. The number of significant places retained in the rounded off value should be same as that of the specified value in this standard.

1. SCOPE

1.1 This standard (Part II) covers guidance on installation of distribution and power transformers covered by IS : 1180-1964† and IS : 2026‡ (issued in various parts)-1977‡ respectively.

1.2 Special purpose transformers such as gas cooled, synthetic liquid insulated, dry type and mining transformers, and instrument transformers are excluded from the scope of this code. In such cases, manufacturers' instructions shall be strictly followed.

2. TERMINOLOGY

2.1 For the purpose of this code, the definitions given in IS : 1180-1964† and IS : 2026 (Part I)-1977‡ shall apply.

*Rules for rounding off numerical values (*revised*).

†Specification for outdoor type three-phase distribution transformers up to and including 100 kVA 11 kV (*revised*).

‡Specification for power transformers:

Part I General (*first revision*).

Part II Temperature-rise (*first revision*).

Part III Insulation level and dielectric tests (*first revision*).

Part IV Terminal markings, tappings and connections (*first revision*).

3. GENERAL GUIDELINES

3.1 Exchange of Information

3.1.1 Before ordering the equipment, information pertaining to installation operation and maintenance should be collected and examined by the purchaser so that the equipment is procured to suit the duties, location and installation conditions under which it is to operate. This information should include any special building features, such as access doors, lifting beams, oil sumps, cable trenches, foundation details and ventilating arrangement, which may be desirable.

3.1.2 Details of the electricity supply available and of any special requirements limiting the ratings of equipment which may be connected to the supply should be ascertained from the supply authority. These may include abnormal overvoltages and their duration, variations in frequency, etc.

3.2 Interchangeability — Where a number of similarly rated units are to be used, arrangements should preferably be made for such units to be interchangeable as regards electrical characteristics, if required for parallel operation and essential dimensions, such as those affecting the fixed arrangements, space occupied, position of cable boxes or terminals, direction and gauge of rollers, etc. Where cable-end boxes form part of the transformer, these may be of the detachable type. Wherever required, care shall be taken to adequately support the cable boxes while interchanging the transformers.

3.3 Compliance with Indian Electricity Rules and Other Regulations

3.3.1 All electrical installations shall comply with the requirements of the Indian Electricity Act and Rules made thereunder and with any other regulations that may be applicable, such as those made under Factories Act, 1948 and Fire Insurance Act. The following rules of Indian Electricity Rules, 1956, are particularly applicable:

35, 45, 50, 51, 59, 61, 62, 63, 64, 65, 67, 68, 69 and 114.

3.3.2 It is recommended that the local authorities concerned in the administration of the rules and regulations in the matter of the layout and of the installation of the transformer should be consulted in regard to the rules and regulations that may be applicable.

3.3.3 The electrical installation shall be carried out only by authorized persons competent to undertake such work under the rules and regulations that may be in force in different states.

3.4 Connection with Earth — All connections to earth shall be made in accordance with IS : 3043-1966*.

*Code of practice for earthing.

3.5 Isolation — A circuit-breaker or a linked switch of requisite breaking capacity shall be installed on both sides of the transformer, unless specifically exempted by the authorities, so as to carry and break the current on all phases and to isolate the transformer from both sides. The linked switch on the primary side of the transformer may be of such capacity as to carry the full load primary current and to break only the magnetising current of the transformer, provided the linked switch or circuit breaker on the secondary side is of such a capacity as to carry the full load secondary current and interrupt the system short-circuit currents. All the isolating devices shall be placed in an accessible position for operation by authorized persons only (*see also* **4.5**).

NOTE — The cases of exemption by authorities referred above relate to cases such as rectifier built-in transformers, furnace transformers, etc.

3.6 Provisions for Draining of Oil — Transformers installed inside buildings, where the oil capacity exceeds 2 000 litres of oil, shall be provided with oil soak pits. Typical designs of oil soak pits are shown in Fig. 1. Oil soak pits may also be made of RCC tanks.

3.6.1 For indoor transformers, oil soak pits shall be provided either under the transformer or outside the transformer room.

3.6.2 If two or more transformers are installed side by side, they shall be separated by fire-separation walls. Fire separation walls are deemed to be adequate from fire-safety point of view, even if oil capacity of individual transformers do not exceed 2 000 litres, and total capacity of all transformers installed side by side exceeds 2 000 litres.

NOTE — Reference shall also be made to 4 of SP : 7 (Part IV)-1970* and IS : 1641-1960†.

3.6.3 The capacity of the oil soak pit shall be such that to soak the entire oil content of the transformer, it is intended for individual soak pits for each transformer (wherever necessary) with capacity as above or a common soak pit to contain the entire oil content of the biggest of the transformers shall be adequate.

3.6.4 Soak pits shall be designed in such a way to provide for safe draining of liquids to soak pits.

4. DESIGN

4.0 The following clauses cover installation design features of transformers. Special requirements may have to be complied with and special features might have to be built into the design of transformer by the manufacturer

*National building code of India.

†Code of practice for fire-safety of buildings (general) : General principles and fire grading.

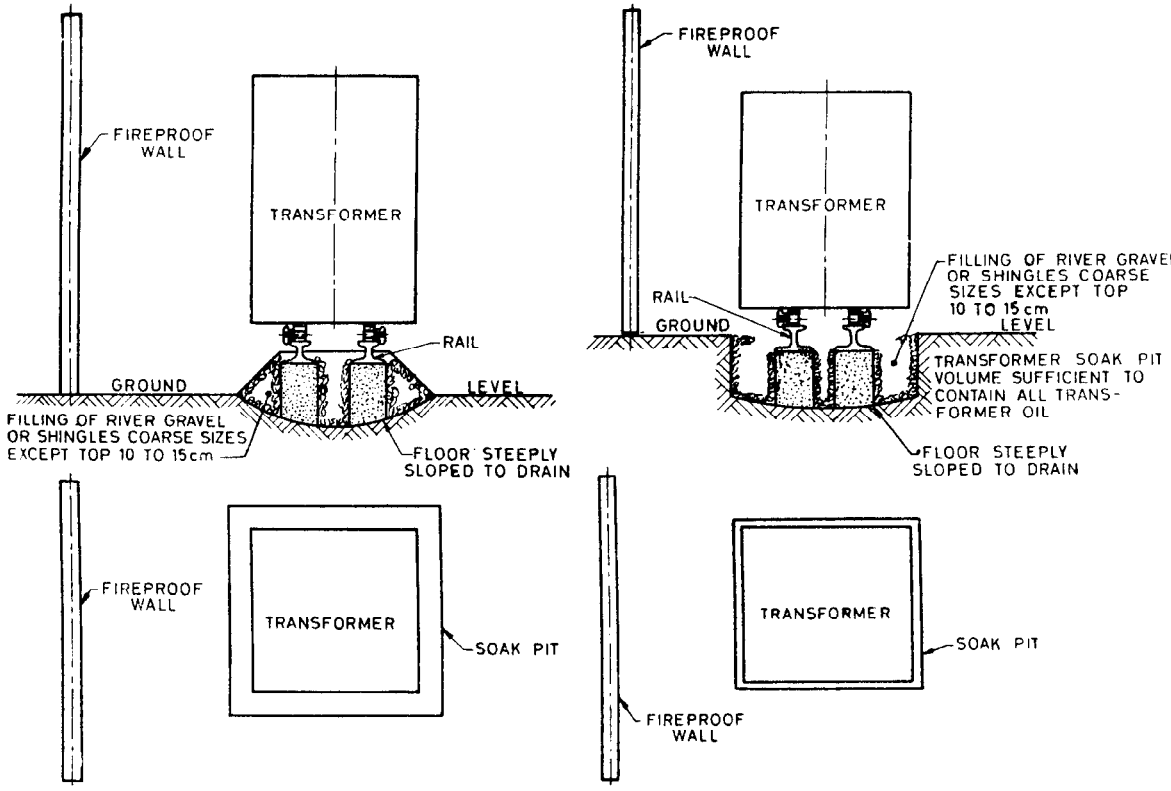

1A 1B

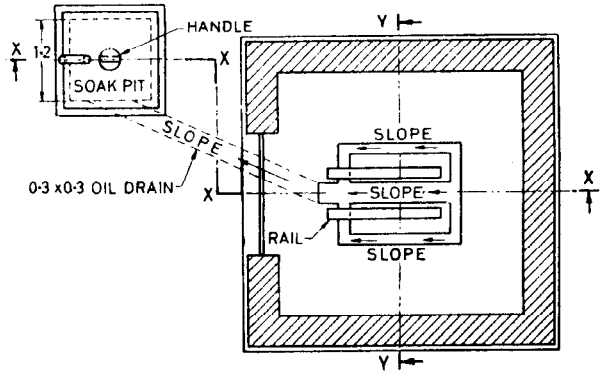

SECTION BB

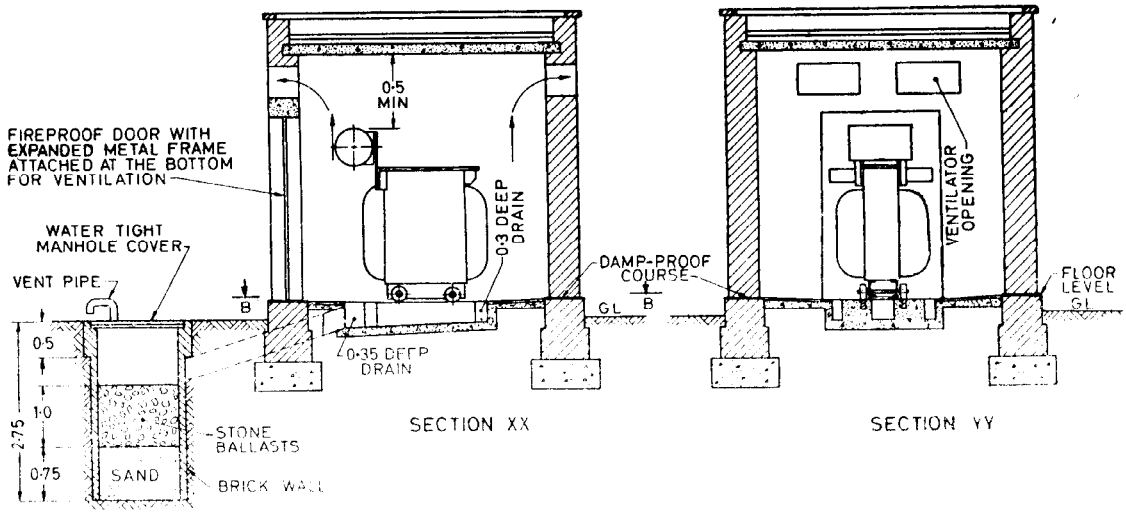

SECTION XX SECTION YY

1C

NOTE 1 — Sketch shows typical arrangement for a transformer installed in a locality not subject to seepage of subsoil water in this case. The soak pit should not be plastered inside or outside and the bottom should be left open to earth.

NOTE 2 — In locations prone to seepage of subsoil water reinforced concrete construction of soak pit should be adopted, the bottom of the soak pit being also sealed to prevent ingress of water.

NOTE 3 — The size of the soak pit will depend on the quantity of oil in the transformer, and type of construction of soak pit, the main consideration being that the entire quantity of oil should be quickly drained away from the transformer room into and/or away from the soak pit. Recommended minimum cross-section for the type of construction shown is 1·2 × 1·2

NOTE 4 — Exhaust fan may have to be provided in the transformer room, if site conditions do not permit adequate natural ventilation.

All dimensions in metres.

FIG. 1 TYPICAL DESIGNS OF SOAK PITS FOR TRANSFORMERS

As in the Original Standard, this Page is Intentionally Left Blank

for equipment to be installed in siesmic zones. Even though, at this stage, standardization of such practices had not been achieved, users may refer to IS : 1893-1975* for general guidance.

4.1 General — The construction of all apparatus and conductors shall be such that operating temperatures of components do not exceed the safe figures laid down in the relevant Indian Standard specifications having regard to the conditions in which the equipment is used. The equipment shall be so installed, operated and maintained as to ensure that such safe temperatures are not exceeded.

4.2 Electrical Protection of Circuits and Apparatus — All apparatus and associated cable-work should be protected at the origin of the circuit against the effects of electrical faults in the circuit by a suitable device.

4.3 Neutral Connection — The manner of connection between the neutral of the transformer and the earth should be decided taking into account any effect on transformer's cost, method of protection of transformer and electrical system, requirements concerning interference with telephone lines, requirements of system operation, etc.

4.3.1 Earthing of neutral shall be carried out in accordance with IS : 3043-1966†.

4.4 Terminations — When the incoming or outgoing cables are terminated adjacent to the transformer and a bare connection made from the cable terminals to the transformer bushings ; the cable terminals, in such a case should be at a sufficiently high elevation so as to be inaccessible or suitably protected by an enclosure. All bare connections shall be suitably protected against birdage, vermin effects, etc, so as to avoid unnecessary interruption of supply.

4.5 Isolation of Equipment

4.5.1 Means should be provided for the complete isolation of every transformer from the supply and these should be so placed as to be readily accessible from the position in which danger may arise to enable the supply to such transformers to be cut off immediately (*see also* **3.5**). In making provision for isolation, due regard should be paid to the necessity for isolating all control, pilot and interlocking circuits, whether these are derived from the main source of supply or independently. If it is not practicable to carry out complete isolation with a single device, clear and concise instructions should be affixed to the apparatus in a permanent manner setting out the procedure to be adopted to secure complete isolation.

4.5.2 Where the control apparatus for transformer is liable to be exposed to an inflammable atmosphere the means of isolation should be placed in

*Criteria for earthquake resistant design of structures (*third revision*).

†Code of practice for earthing.

an enclosure independent of the apparatus which it is designed to isolate. Alternatively they shall be mounted in a flameproof enclosure forming a part of, but segregated in a manner to render it flameproof from the compartment enclosing the apparatus which it is designed to isolate. The isolating means being provided shall have an independent access cover.

4.6 Surge Protection

4.6.1 The desirability of providing protection to the transformer from surges of atmospheric or other origins shall be examined carefully in every case. Installations including terminations of overhead lines as well as cables, require careful study.

4.6.2 If lightning arresters are to be installed they shall be used in accordance with IS : 4004-1967*.

4.6.3 Earthing of lightning arresters shall be carried out in accordance with IS : 3043-1966†.

5. TRANSPORTATION

5.0 The engineer should obtain, well in advance, all relevant information about the overall dimensions, weight for transport, dimensions of the transport, installation, etc, of the transformer in question. Often, it is necessary to check up with rail or road authorities and enlist their cooperation for the purpose of transporting transformers to the site. This may involve procurement of trans-shipment facilities, special wagons or trailers, checking up of capacity of bridges, railway loading gauge, and similar matters. It is also desirable to check with the insurers regarding conditions there may be; to be complied with, during transportation.

5.0.1 It is recognized that specific guidelines and strict rules cannot be specified in this standard regarding the method to be adopted for transportation. Keeping this in view, it is suggested that while assistance can be taken from the following, it shall also be borne that each individual consignment has to be worked out as a special case and details decided between the buyer and the seller.

5.1 Packing and Despatch

5.1.0 After testing each transformer, it shall be despatched from the works ready for taking into service. According to the transport facilities available for the route, transformers are transported either by rail, road or sea.

*Application guide for non-linear resistor-type lightning arresters for alternating current systems.

†Code of practice for earthing.

5.1.1 Transformers after processing and testing are despatched from the factory either:

a) dried and completely filled with oil, ready for service;

b) with oil covering core and coil, balance space filled with dry air or inert gas; or

c) completely filled with dry air or inert gas at a small positive pressure.

NOTE — The pressure of filling of dry air or inert gas shall be such that, after transportation inspite of leakage and variation of ambient temperature, a positive pressure still exists (*see* **5.1.2**).

In case of large transformers some of the accessories are despatched separately.

5.1.2 Transformer tank is filled with oil or pure dry inert gas depending upon the transport weight limitations. In case the tank is filled with oil, sufficient space is left above the oil to take care of the expansion of the oil. This space is filled with inert gas under positive pressure or pure dry air under atmospheric pressure. In case the tank is filled with inert gas, a positive pressure according to the manufacturer's standard practice shall be maintained. The temperature and pressure at the time of gas filling shall be marked on a tag. External gas cylinders may also be provided to make up any gas leakage during transit for transformers having ratings 50 MVA and above. In such cases the transformer shall be accompanied by escort decided by the manufacturers or the customers as per the agreement.

5.1.3 All external fittings such as bushings, conservator, Buchholtz relay, de-hydrating breather, explosion vent, radiators, rollers, etc, which are liable to damage in transit shall be removed and packed separately. All openings created on the tank by the removal of components are blanked with identifiable blanking plates. All openings on the fittings removed are also closed with blanking plates.

5.1.4 When any internal parts like tap changers or insulating items are removed for transportation, they are despatched in tanks filled with oil/ inert gas or suitable measures taken so that they do not absorb moisture.

5.1.5 All fragile parts such as temperature indicators, oil level gauges, bushings, etc, shall be carefully packed to avoid breakage in transit.

5.1.6 All blanking plates, tank valve guards, etc, used exclusively for transport may be preserved for future use.

5.2 Rail Transport

5.2.1 *General*

5.2.1.1 A majority of transformers are transported by rail due to considerations in weight, dimensions and economy. In cases of transformers

where the weight and dimensions of the main body exceed limits, special well wagons are employed. Detached parts are packed/crated and normally despatched along with the main body of the unit, so that all the parts are received at the destination station with the unit.

5.2.2 *Loading*

5.2.2.1 Most of the transformer manufacturers have their own railway siding and transformers are loaded at their works using their cranes. In cases where separate siding facilities are not available, road tractor trailers are used for the transport from works to loading railway stations. Mobile cranes and railway cranes are also used for loading the units onto the wagons. In the absence of any crane facility, the transformers are unloaded from the trailers near the railway track onto a platform of adequate height, built up of wooden sleepers. Jacks and pull lifts chain pulley block of adequate capacity are used to slide the transformer over a pair of rails placed on the sleeper platform bridging the trailer width in full. To prevent the trailer from toppling when the transformer is moved to the platform, the stage end of the trailer is supported by a sleeper pack. From the platform the transformer is slid onto the wagon taking care to have the rails for the full width of wagon. The rails are greased for easy movement. The rollers of the transformer are removed before leaving the works. While providing a sleeper stage it should slightly be at a higher level to allow for the increase in height of the trailer while the load is released due to the springs getting relaxed.

5.2.3 *Lifting and Jacking*

5.2.3.1 Transformers should be lifted by the lugs or shackles provided for the purpose and simultaneous use should be made of all such lugs or shackles in order to avoid any unbalance in lifting. Before lifting the complete transformer it should be ensured that all cover bolts are tightened. Apart from the main lifting points designed to take the total weight of the unit, the transformer has subsidiary lifting points suitable for particular components only. Care shall be taken to distinguish between them. It is advisable to use a spreader between slings so that the lift on the hooks is in the vertical direction. The slinging angle is not to exceed 60°. Safe loads of wire ropes and the multiplying factor to be used corresponding to the lifting angles shall be kept in view. Gunnies are used on the slings to avoid metal contact and consequent damage to the slings.

5.2.3.2 Where it is necessary to use jacks for lifting, only the projections provided for the purpose of jacking should be used. Jacks should never be placed under valves or cooling tubes. Not more than two jacks should be operated at the same time. When two jacks are being operated the opposite side of the transformer should be firmly supported by sleepers. Jacks are also not to be left in position with load for a long time. The transformer should always be handled in the normal upright position. During the handling operation care shall be taken to prevent overturning.

5.2.3.3 Loading on the railway wagons is done as centrally as possible to distribute the weight equally on all axles and wheels. Manufacturer's drawing in this regard is to be referred to. It is desired that the transformer is loaded longitudinally on the wagon. To prevent damage to the transformer base, the unit is loaded on a row of sleepers or wooden planks placed on the wagon floor.

5.2.4 *Lashing*

5.2.4.1 The transformer is lashed on all four sides by wire ropes or chain of adequate size and are tightened using turn buckles with locking facility. Wooden props are also used. After the movement of the wagon for a short distance the tightness of the lashing is to be checked. When enroute transhipment is involved, lashing is to be checked again.

5.3 Road Transport

5.3.1 *General*

5.3.1.1 Generally road transport is resorted to in the case of smaller units or where rail links are not available or where well developed road systems exist. Multi-axle tractor driven low-platform trailers are used for road transport. The tractors are to have adequate hauling capacity and the trailers loading capacity.

5.3.2 *Route Survey*

5.3.2.1 The road system is examined in detail on the following points :

i) Width of the road	normally not less than 5 m.
ii) Bridges and culverts	to have sufficient strength to take the moving load; consultation with the Highways Department is necessary.
iii) Encumbrances en route	like telephone, telegraph traction and electric utility wires, avenue trees, cross beams of bridges, sub-ways, aqueducts, etc, across the roadway.
iv) Sharp bends and gradients	steep gradients up or down and sharp bends with respect to the manoeuvrability of the tractor trailer.
v) Road worthiness and load bearing capacity of the road	of the route like sandy stretches, water-logged areas, crowded localities like market places, schools and other public places.
vi) Operational	constraints of the tractor trailer to be used. To clear up any doubts as to the feasibility of the route, a rehearsal drive of the tractor trailer unit is performed.

5.3.3 *Strengthening the Route*

5.3.3.1 Such of those bridges and culverts which require strengthening are strengthened by adopting suitable measures like proping up using timber and steel in consultation with the Highways Department. In some cases an alternative route by-passing such bridges and culverts may be cheaper than proping up.

5.3.4 *Loading, Lifting, Jacking and Lashing* (*see* **5.2.2** to **5.2.4**)

5.3.5 *Movement*

5.3.5.1 A pilot vehicle with all tools and tackles like jacks, sleepers, chequer plates, crowbars, etc, and sufficient trained staff should be run in front of the vehicle. Red flags and danger lamps should be exhibited at prominent places to warn traffic on the route.

5.3.5.2 The branches of avenue trees that are likely to foul the equipment should be cleared while the load is moved. Electric utility power lines likely to foul should be switched off and lifted temporarily/ dismantled while the load is moved.

5.3.5.3 After moving the load for a short distance tightness of the lashings should be checked.

5.3.5.4 In the case of night halt or stoppage of the loaded trailer for a fairly long duration the trailer should be supported either by sleepers or providing supporting jacks on all sides thus releasing the load from the tyres. Danger lights should be displayed in the front and rear of the vehicle.

5.3.5.5 For the normal running, it is desirable not to run the vehicle over 15/20 km per hour with no load and 10/15 km with loads on good surfaced roads. For bad roads it is desirable to run the vehicle at much lower speeds.

5.3.5.6 The brake system on the tractor trailer has to be carefully operated whenever the vehicle is running with load. While running over any bridge or culvert the vehicle should be run only at a very slow speed. Long before the approach to the bridge the speed should be brought down and the vehicle allowed to proceed over the bridge without creating any impact which is sometimes caused by applying brakes when running at high speeds. Till all the wheels of the tractor trailer are clear of the bridge, the speed should not be increased. Transportation should be avoided during heavy rains and foggy weather.

5.3.5.7 In cases of the vehicle getting locked up in a slipping soil, the safest procedure would be to detach the tractor after the trailer had been anchored suitably by sleepers. The tractor may be moved forward and anchored suitably with sufficient sleepers. The trailer can be pulled up by winches in the rear of the tractor.

5.4 Water Transport

5.4.1 *General*

5.4.1.1 While ocean going ships are used for the high seas, barges are used for inland navigation routes. Special care is to be taken for prevention of rusting of parts and ingress of moisture like use of anti-corrosive paints, silicagel packings, sealing using polythene covers, etc. Packages should not be left on wharves for more than 2 weeks. Storing of heavy packings is to be done only in consultation with port authorities so that the safety of the wharf is not endangered.

5.4.2 *Loading*

5.4.2.1 Usually the wharf cranes may not have sufficient capacity for handling very heavy packages. Special floating cranes or cranes of ships are used for loading the packages from the wharf to ships or barges. In the case of barges special care is required to prevent over-turning of the barge at the time of loading. Packages are to be placed inside the hold. Decks of ships are not to be used for keeping the packings during transport.

5.5 Unloading at Site

5.5.1 In cases where the substations are having adequate crane facility, the transformer is unloaded by crane. Alternatively, mobile cranes are used. Where no crane facility is available a trench is dug to a depth equal to the height of the trailer platform and the transformer is slid to position. If this also is not possible the transformer is unloaded onto a sleeper platform and gradually lowered to plinth level. The sleeper platform level is to be at a slightly higher level to allow for the increase in height of the trailer while the load is released due to the springs getting relaxed. Winches are to be used for putting the transformer into position.

6. INSPECTION AND STORAGE

6.1 Inspection

6.1.1 Transformers are liable to get damaged during transit and therefore it is recommended that immediately on arrival, the transformer should be unpacked and examined for any sign of damage in transit, particular attention being paid to the following:

a) Tank sides or cooling tubes dented,

b) Protruding fittings damaged,

c) Oil sight-glass broken,

d) Bushings cracked or broken,

e) Bolts lose due to vibration in transit,

f) Oil leakage (if filled with oil) particularly along the welds or reduction in the pressure of the gas (if gas filled); and

g) Damage to auxiliaries.

6.1.2 If it is suspected that the transformer has suffered material damage, suitable action shall be taken.

6.1.2.1 *Serious damages* — Serious damages should be reported to the manufacturer. It is advisable to wait till the representatives of both the manufacturer and the transporter are present before lifting the core and coils from the tank for further inspection.

6.1.2.2 *Slight damages* — Damage which does not appear to be serious but which indicates heavy knock should be treated with caution. The core of the transformer should be lifted from the tank in the presence of the representatives of both the manufacturer and the transporter and examined for any damage to ensure that they have not been damaged. The report of this examination should be made to manufacturer as well as to the transporter.

6.1.2.3 *No damage* — If there are no external damages, it is advisable to leave the transformer in its tank without making any attempt to look inside.

6.1.3 The presence of rust and condensation anywhere either within or outside the tank and the pink colour of silicagel breather fitted for transport. provided with transformers filled with dry air, indicates possibility of absorption of moisture by the windings. If the transformer is supplied filled with nitrogen or any other inert gas, its pressure should be checked in accordance with the temperature-pressure chart supplied by the manufacturer. If the pressure appears to be either high or low, it is possible the windings may have absorbed moisture during transit. In such cases the transformer should be dried out in accordance with the procedure laid down in **8.2**.

At the time of receipt, oil samples from the top of the conservator and the bottom of the transformer should be drawn and tested for presence of moisture and also for dielectric strength. If both the samples are free from moisture and the windings indicate satisfactory insulation resistance, generally drying out may not be necessary. However, if it is desired as an additional precaution, the transformers may be dried out in accordance with the procedure laid down.

6.1.3.1 If examination as given in **6.1.3** indicates ingress of moisture, the transformer shall be dried under vacuum, filled with dry nitrogen or oil and stored. The oil contained in the transformer on receipt shall also be filtered before storing. Care shall be taken to ensure that the gaskets are tightened.

6.2 Storage — Transformers received at site and not expected to be installed immediately are likely to absorb moisture. Indoor type transformers should be stored under cover and the transformer should preferably be filled with oil to reduce the extent of possible condensation of moisture, and the breathing pipe should be plugged. Transformers which are required to be kept in storage for long periods should preferably be drained of oil and the tanks should be filled with dry nitrogen under slight pressure. However, if it is necessary to store them outdoors, these should be covered to prevent moisture and foreign material entering into the tank. When it becomes necessary to store a partially or completely disassembled transformer the core and the coils should be immersed in dry oil, and stored in a dry room having as uniform a temperature as possible. If the unit is stored outdoors without oil, moisture may condense in the tank due to variations of air temperature and this may be absorbed by the windings. To avoid this, it should be filled with nitrogen or any other inert gas.

7. INSTALLATION

7.0 General — A set of record plans should be provided by the installation engineer clearly indicating the complete layout of the installation. A schedule of the works to be carried out with time required shall be charted out.

7.1 Precautions

7.1.1 As far as possible no work shall be done during rainy season to avoid moisture absorption by the transformer.

7.1.2 Extreme care shall be taken to prevent any foreign material from being dropped into the transformer. Workmen having access to the interior of a transformer should empty their pockets of all loose materials. Any spanners or other tools used shall be securely tied so that they can be recovered easily if accidentally dropped.

7.1.3 Fibrous cleaning materials shall not be used. The presence of loose fibres in suspension in transformer oil can reduce materially its insulating properties.

7.1.4 All components despatched separately shall be cleaned inside and outside before being fitted.

7.1.5 If any internal temporary transportation braces are provided they are to be removed without disturbing any permanent internal arrangements.

7.1.6 The transformer shall be erected on a level foundation.

7.2 Handling

7.2.1 Transformers should be lifted by the lugs or shackles provided for the purpose and simultaneous use should be made of all such lugs or

shackles in order to avoid any unbalance in lifting. Before lifting the complete transformer, it should be ensured that all cover bolts are tightened.

7.2.2 Where it is necessary to use jacks for lifting, the projections provided for the purpose of jacking should be used. Jacks should never be placed under valves or cooling tubes. In certain circumstances, in consultation with the manufacturer, jacks may be placed under stiffening curbs on the tank base.

7.2.3 *Making of Leak-Proof Joints*

7.2.3.1 Only such material as recommended by the manufacturer should be used for the gasket. However, if no recommendation from the manufacturer is available gasket may be made of high grade cork or synthetic material like neoprene or neoprene bonded cork. The surface should be thoroughly cleaned by alcohol, naphtha or any other cleansing or degreasing material recommended by the manufacturer. Synthetic material gaskets do not require any sealing compound to obtain tight joints. It may only be necessary to use some type of adhesive compound in spots on vertical faces to retain the gasket in place until it is tightened. Mechanical stops are generally provided to limit compression of the gasket material to two-third of its original thickness.

7.2.3.2 Medium grained cork or gasket of synthetic material is recommended for use with unmachined surfaces, such as tank bands and covers; and hard composition cork for circular gaskets, such as those under bushings and manhole covers. An approved gasketing compound should be used for joints made of cork. Whenever gaskets are not made in one piece, scarfed or dovetailed joints should be used by tapering the ends. It is advisable to use file or sand paper to smoothen the cut after it is made. When tightening the cover bolts, they should be tightened with care, slowly and uniformly increasing the pressure as too much pressure will disrupt the jointing materials; furthermore, an unevenly compressed gasket may spring up a leak.

7.2.3.3 If liquid leaks cannot be stopped by re-tightening, new gaskets should be used. When covers, bushings or radiators are removed, the old gaskets should be replaced by new ones when the unit is reassembled.

7.2.3.4 Leaks through screw joints, such as nipples (if due to poor threads) are remediable only by rethreading the nipple to proper dimensions, retapping the female threads and cleaning them thoroughly. A filler which is insoluble in the insulating oil, does not adversely affect it, does not shr nk and remains plastic, should be used for threads.

NOTE — Shellac should not be used as a filler since it shrinks as much as by 50 percent when the solvent evaporates.

7.3 Site Preparation

7.3.0 Since all electrical installations shall comply with the requirements of the Indian Electricity Act and Rules made thereunder, it is essential that they are complied with. The provisions of the Factories Act and Rules are also to be complied with to the extent applicable.

All tools, tackles and other equipments required for the erection work may be arranged at the site before the work is started. The list of items that will be generally required is given in Appendix A.

7.3.1 *Indoor Sites*

7.3.1.1 The most important thing to be ensured with transformer installed indoors is proper ventilation, that is, free moment of air round all the four sides. The level of the transformer base should be higher than the highest flood and storm water level of that area.

NOTE 1 — As a thumb rule, an area of at least 2 m^2 for outlet and 1 m^2 for inlet per 1 000 kVA of transformer capacity should be provided in the sub-station. For large transformer units, it may not be practicable to design the sub-station to admit the requisite quantity of air for natural circulation. Therefore, in such cases fans shall be provided.

NOTE 2 — Where transformers are required to be installed in basements, special care shall be taken to ensure prevention of flooding.

7.3.1.2 The transformers should be kept well away from the wall. The minimum recommended spacing between the walls of the transformer periphery from the point of proper ventilation have been shown in Fig. 2. However, the actual spacing may be different than those given in Fig. 2, depending on the circumstances, such as access to the accessories.

7.3.1.3 The site should be so chosen that it is not normally damp because besides corroding the tank body and tubes, the dampness may find its way to the bushings and may cause them to flash over. There shall be no chance of water dripping either on the transformer or anywhere in the transformer room itself. Chemical fumes, particularly acid fumes, should not be allowed in the transformer room as they corrode the tank and also cause the oil to deteriorate.

7.3.1.4 For indoor installations the air inlets and outlets shall be of adequate sizes and so placed as to ensure proper air circulation for the efficient cooling of the transformers. The inlets should preferably be as near the floor as possible and the outlets as high as the building allows to enable the heated air to escape readily and be replaced by cool air.

7.3.1.5 Minimum clearance between the highest point of the conservator tank to the ceiling of the transformer room should be sufficient to remove the mounting on the transformer like the conservator. However, this clearance should not be less than 0·5 m.

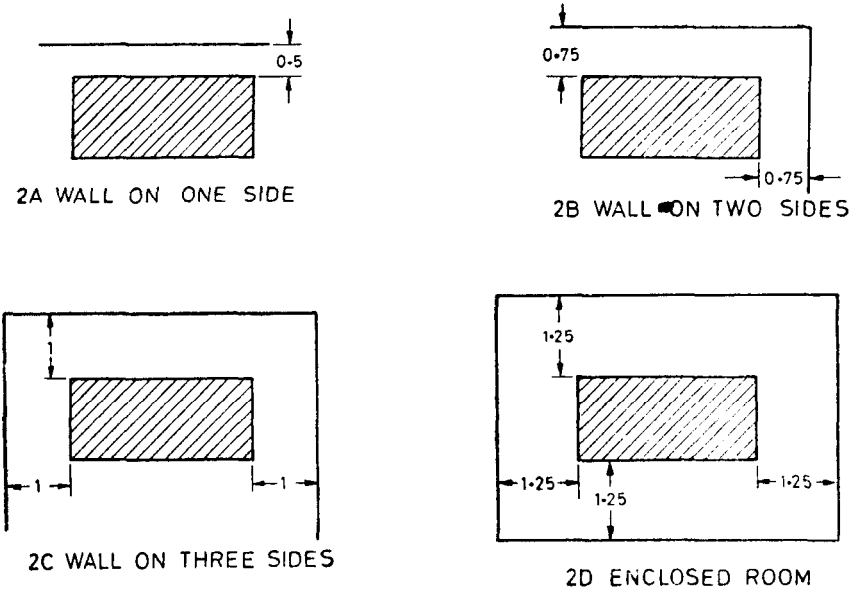

All dimensions in **metres.**

FIG. 2 MINIMUM RECOMMENDED SPACING BETWEEN THE WALLS AND TRANSFORMER PERIPHERY

7.3.1.6 In this connection, consideration should be given to the heat output from the transformer which affects the surrounding atmospheric temperature. Approximate heat output of transformer, when delivering full rated load for different ratings of the transformer, is given below:

Rating	*Heat Output*
kVA	kW
16	0·75
25	1
63	2
100	3
160	4
200 to 1 000	2 + 1·5 per hundred kVA

NOTE — The temperature of the winding should not exceed limits specified in IS : 2026 (Part II)-1977.*

*Specification for power transformers: Part II Temperature-rise (*first revision*).

7.3.1.7 The transformer should be so installed that severe vibrations are not transmitted to its body.

7.3.2 *Outdoor Sites* — Only transformers designed for outdoor use should be installed outdoors. In case of locations where the atmosphere is polluted, it is desirable that the transformer is located in suitable covered shelter to minimize adverse effects of polluted atmosphere.

7.4 Facilities for Maintenance

7.4.1 In the case of heavy units of equipment, adequate passageways, doorways, or trap doors should be provided, where practicable, to allow the passage of the equipment to its operating position. The possible need for facilities for removing the equipment at a later date for repairs or maintenance should be considered in relation to the accessibility of the equipment. For lifting the transformer core and handling heavy equipment, it is often advisable to arrange for the incorporation of a lifting beam in the structure of the building, the beam being located at a suitable height immediately over such parts of the equipment as may require attention and being capable of supporting the maximum weight involved.

7.4.2 The transformer should be so installed that the breather, thermometer, oil level indicator and the top position indicator may be safely examined with the transformer energized.

7.4.3 Sampling valve or drain valve should be conveniently arranged for drawing oil samples.

7.5 Foundations

7.5.1 Since the transformers operate without moving parts, generally a simple foundation is satisfactory provided it is firm, horizontal and dry. The transformer should not rock or bed down unevenly so as to tilt, as this may strain the connections. The base should be horizontal to keep the oil level correct.

7.5.2 For outdoor installations, a level concrete plinth above the maximum flood or storm water level of the site, of correct size to accommodate the transformer in such a way so that no person may step on the plinth, with, if necessary, bearing plates of sufficient size and strength, should be provided for transformers. Where rollers are fitted, suitable rails or tracks should be provided and when the transformer is in the final position, the wheels should be locked by locks or other means to prevent accidental movement of the transformer. Where full height partition walls are built, adequate clearances as for indoor transformers should be provided.

7.5.2.1 Flat paving stones may also be used for making platforms provided they are laid on a firm foundation and can provide drainage and withstand the weight of the transformer.

7.5.3 For installing pole-mounted transformers, as far as possible, junction poles, subsidiary poles, and street lighting poles should not be used as transformer poles. Where this is unavoidable, special care should be taken to maintain proper climbing space and to avoid crowding of wire and equipment. Transformers should be installed only on poles strong enough to carry their weight. Transformer poles should be straight and, where necessary, guyed to prevent learning or raking of the pole after the transformer is hung. Double cross-arms should be provided for each transformer installation. The climbing space should be carefully maintained so that it should not be necessary for a lineman to come close to the transformer tank in climbing up or down a pole. A suitable anti-climbing device should be provided.

7.6 Cabling

7.6.1 Cable trenches inside sub-stations and switch stations containing cables shall be filled with sand, pebbles or similar non-inflammable materials, or completely covered with non-inflammable slabs. In many installations it may be advisable, for reasons of ease of maintenance to locate equipment centrally with cable galleries serving the purpose of cable trenches.

7.6.2 Cables may also be carried along the walls clamped on the vertical supports at suitable intervals depending on the cable sizes. The cables, when arranged in a verticle plane, should run clear off the walls. Many types of special clamps for this purpose are now available. Where a large number of cables have to be carried and it is not desirable for some reason to have a portion of the wall face covered with cables, these may be run in cable trays or racks. Where a number of cable trays or racks are used, the spacing between them should be 150 mm or more, depending on the cable sizes. The cables should be laid in a single layer and the routings should be preplanned so that cross-overs are kept to minimum. The trays may be made from suitable materials such as galvanized iron or aluminium sheets, or expanded metal. The expanded metal affords better ventilation for the cable. In view of economy and compactness, control and power cables are laid in the same trench; care shall be taken to segregate them in separate racks, with the control cables effectively screened. DC control cables, ac power circuits and instrument transformer circuits shall be segregated from one another.

7.6.3 The cables should not be exposed to heat from other equipment. The cable trenches should be suitably sloped and arrangements should be made for draining them or preventing them from getting filled with water.

7.7 Bushings and Cable Boxes

7.7.1 *Bushings* — If bushings are removed from the transformer, they should be carefully inspected for cracks or chips before installing them and making sure that gaskets are in proper places. Often the leads are trapped

between two nuts, the first nut holding the bushing stem while the second nut holds the connection. One nut should be held with a thin spanner whilst tightening the other. Nuts or bolts which exert pressure on the porcelain should be tightened evenly or else bushing may crack.

7.7.2 *Cable Boxes* — If the transformer is fitted with cable boxes and is to be connected by cables, the cable ends should be sealed to prevent their absorbing moisture. The cable boxes should be filled with compound or oil as required, after making the conections. PVC and XLPE cable boxes need not be filled with compound or oil.

7.8 Connections

7.8.1 *Medium Voltage* — Both cable and bare connections may be used. Where cables or wires other than metal-sheathed or armoured cables are run in metallic casings, all three phases and the neutral shall be run in the same metallic casing. Where metallic casings are used, no joints should be made in the cable or wire. All metallic casings, fittings, sheathing and armouring shall be effectively earthed.

7.8.1.1 In the case of transformers of capacity 750 kVA and above, for feeding the medium voltage supply, the method of connection is generally by single-core lead covered cable. Bus Duct connection is also one of the desirable practices.

7.8.2 *High Voltage* — The connection by insulated cables for the high voltage side of the transformer, if laid in a covered trench inside a building, shall be by suitable paper-insulated lead-sheathed and armoured or aluminium-sheathed, or other suitable types of cable. If the connecting cable is paper-insulated lead covered and if accessible or laid in ground, it shall be armoured or provided with metallic covering. All cable boxes, and metallic sheathing and armouring shall be efficiently earthed. Where bare conductors are used for connections, these shall be inaccessible. The conductors and their supports should be designed to safely withstand stress under short-circuit conditions.

7.8.3 *Bare Connections* — In medium and high voltage sub-stations, particularly where the magnitudes of currents are large, bare conductors of copper or aluminium may have to be used for connection to be transformer terminals. These may be of the flexible type or of the rigid type having rectangular or hollow circular cross-section. Where connections are rigid and more than 3 to 4·5 m long, special expansion type of connectors are recommended to prevent the terminal bushings being unduly stressed due to thermal expansion. If aluminium or ACSR conductors are used for connection to the transformer terminals made of copper, suitable bimetallic type of connectors should be used to prevent electrolytic corrosion at the contact surfaces of dissimilar metals and necessary precautions taken in making these joints.

7.9 Precautions against Risk of Fire

7.9.1 In order to limit the spread of fire in the event of ignition, insulating oil, oil filled switchgear and transformer units should be segregated in groups of moderate capacity; where the size and importance of the plant warrants it, this may be achieved by segregation in separate enclosure. Alternatively fire-resisting barriers may be provided between transformers or sections of switchgear. (*see* Note under **3.6.2**).

7.9.2 Cables and cable trenches shall be laid in accordance with IS : 2274-1963* (*see also* **7.6**).

7.9.3 In sub-stations or transformer chambers situated below blocks of buildings which are ordinarily frequented by many people or in places where the fire risk is considerable, the following precautions are recommended:

a) The structure and, in particular, any partition walls or doors should be of such construction as to be capable of resisting the effects of fire for a considerable period, and

b) Independent ventilation of the chamber should be provided and any trunking which is in communication with other parts of the building should be excluded therefrom. Access doors to the chambers where the equipment is installed should be provided.

7.9.3.1 In exceptional cases the following precautions may also be taken:

a) Remote indication of undue rise of the temperature inside the transformer room,

b) Remote disconnection of the supply, and

c) Fixed automatic fire-fighting equipment shall, wherever necessary be installed. The fire extinguishing medium (for example, water spray, foam and carbon dioxide) and the means and methods of applying the same should be chosen carefully to suit each installation. Such equipment should be supplemented by suitable portable extinguishers. A number of these should be kept adjacent to but not inside the area of risk, so that access to them is not impeded when a fire has already started.

NOTE — The importance of the fire extinguisher to be used for various types of electrical fires cannot be overemphasized; for instance, spraying of water on live parts of electrical apparatus on fire would charge the pipe-work and may endanger the lives of fire fighting staff.

7.9.4 For large outdoor sub-stations, protection may also be provided by the installation of a sprinkler system, activated by fire-detecting units.

*Code of practice for electrical wiring installations (system voltage exceeding 650 volts).

7.9.5 Reference may be made to IS : 1646-1961* for general guidance on fire safety.

7.10 Safety Precautions

7.10.1 The transformer should be so installed that there is no risk of anyone receiving an electric shock. Although, with all metal parts of the metal tank bonded together and properly earthed, the tank may be considered quite safe, yet consideration should be given to the arrangement of the connections.

7.10.2 With the use of cable boxes and terminal boxes or suitable bushings the terminals are well protected. However, if the metal ends of the bushings are exposed, precautions shall be taken to protect the persons working near the transformer from accidentally touching the live parts. For complete safety, it may be necessary to provide an enclosure to the transformer with door or gate which may be kept locked when the transformer is energized.

7.11 Oil

7.11.1 When oil is despatched to site separately, it is usually in sealed drums. At the time of filling the drums, it shall be ensured that the oil is filtered, clean and dry. The oil to be used for filling or topping up shall comply with IS : 335-1972†. Insulating oils complying with IS : 335-1972† are supplied for electrical equipment, but from the time the oil is received, it is subjected to deterioration or contamination in storage, or in handling. Causes of oil deterioration, and recommendation, for supervision tests are made in IS : 1866-1978‡.

7.11.2 *Sampling* — The condition of oil should be checked before use. Both water and water-saturated oil are heavier than clean and dry oil, and sink to the bottom of the container. Samples of oil from the transformer should be taken from the bottom of the tank. When samples are taken from drum, they should be taken from the bottom only after the oil has been allowed to settle at least for 24 hours.

7.11.2.1 *Receptacles for samples* — Receptacles for samples should preferably be bottles of clear glass with ground glass stoppers and of 1 litre capacity. Sample bottles should not be filled to the top. They shall be clean and dry. If the electrical test cannot be carried out immediately, these bottles shall be hermetically sealed to prevent contamination of oil while awaiting the test. Touching the inside of a receptacle with a damp hand or wiping round with an apparently clean dry cloth may seriously reduce the break down strength of a sample of good oil.

*Code of practice for fire safety of buildings (general) : Electrical installations.

†Specification for new insulating oils for transformers and switchgear (*second revision*).

‡Code of practice for maintenance and supervision of insulating oil in service (*first revision*).

7.11.2.2 *Samples from tank* — When taking samples from the tank, remove all dirt from the sampling valve or plug. To ensure that the valve is clean, allow some oil to flow into a separate receptacle before collecting samples for testing. Sample should be collected in clear glass receptacles so that any water present settles at the bottom of the receptacle and is clearly visible.

7.11.2.3 *Samples from oil drums* — Before taking samples from an oil drum the drum shall have been allowed to stand with the bung vertically upwards for at least 24 hours. The area around the bung should then be cleaned carefully. A clean glass or brass tube long enough to reach within 15 mm of the lowermost part of the drum should be inserted, keeping the uppermost end of the tube tightly closed with the thumb. The thumb should then be removed to allow oil to enter the bottom of the tube. The top of the tube should again be tightly closed and the oil sample withdrawn. The first two samples should be discarded. Thereafter the samples should be released into a suitable receptacle.

7.11.3 *Testing* — The samples of oil shall be tested in accordance with IS : 335-1972*.

7.12 Filling Transformers with Oil

7.12.1 Before filling with oil, transformer should be fitted with all accessories, such as valves, gauges, thermometers and plugs and made oil-tight. Oil samples should be taken and tested before filling the transformer tank. It should be ensured in oil filling operation that no air pockets are left in the tank, that no dust or moisture enters the oil and that it is at least as warm as the surrounding air. All air vents should be opened. Oil should be filled through centrifuge or metal hoses or other hose pipes of synthetic material resistant to transformer oil. Rubber hoses should not be used since the sulphur in the rubber would dissolve in oil, causing the dielectric strength of the oil to be lowered and also, the dissolved sulphur would attack the copper in the windings. If no filters are available, other means of straining the oil, such as two or more layers of muslin cloth thoroughly washed and dried to remove the sizing, may be used. To prevent aeration of the oil, the transformer tank should be filled through the bottom drain valve. In a conservator type of transformer, the rate of oil flow should be reduced when the level is almost up to the bottom of the main cover to prevent internal pressure from rupturing the relief-pipe diaphragm. Sufficient time should be allowed (12 to 24 hours) for the oil to permeate the transformers and also the locked-up air bubbles to escape. Any air accumulated in the Buchholtz relay should be released. The sides of the transformer tank may be tapped with a hammer on all sides to release locked up air. An alternate method for removing the trapped air from large transformers is to keep the transformer energized at

*Specification for new insulating oils for transformers and switchgear (*second revision*).

no load for about 6 to 12 hours at the end of which the air cocks on the transformer are opened to allow the released air to escape.

7.12.2 Vacuum filling may be used for large transformer with tanks designed to withstand full vacuum. A vacuum pump may be connected to the top valve of the transformer and the oil hose to the top filter press valve. The tank shall be tightly sealed and evacuated to approximately 700 mm of mercury and the vacuum maintained for 2 hours or longer depending on the size and voltage of the transformer. The oil valve may then be opened and the oil allowed to flow slowly into the tank. The vacuum should be maintained for a short time after the tank is full. While evacuating the transformer tank, the diaphram or pressure releasing devices of the explosion vent should be removed and replaced by a blanking plate so as to avoid rupture while drawing vacuum, and while filling oil to break the vacuum. Care should be exercised to see that large bakelite panels such as those used for load-ratio control units, are not subjected to pressure (both sides of the panel may be connected to equalize the pressure).

8. DRYING OF TRANSFORMERS

8.0 If as a result of tests carried out in accordance with **7.11.3** presence of moisture is indicated or the oil does not withstand the tests as recommended by the manufacturer or the insulation resistance readings are not satisfactory, it shall be necessary to dry out the transformer.

8.1 Precautions When Drying

8.1.1 Only spirit type thermometers are to be used for temperature measurement. Mercury thermometers shall not be used anywhere except in the pockets provided for this purpose.

8.1.2 The maximum sustained temperature to which transformer oil should be subjected is 85°C. Therefore, the maximum sustained temperature to which anything in contact with the oil should be raised, is 90°C (*see* **8.2.1**).

8.1.3 In no case should the transformer be left unattended during any part of the dryout period. The transformer should be carefully watched throughout the dry out process and all observations shall be carefully recorded.

8.1.4 It is recommended to keep fire-fighting equipment ready during the dry-out period. Naked lights and flames should be kept away while the drying operation is in progress.

8.2 Methods of Drying

8.2.0 There are a number of approved methods of drying out transformer core and coils. If the drying out processs is carelessly or improperly

performed, great damage may result to the transformer insulation through over-heating. The methods generally adopted are described in **8.2.1, 8.2.2** and **8.2.3**.

8.2.1 *Drying with Core and Coils in Oil by the Short-Circuit Method*

8.2.1.1 This method is well suited for core type transformers but is not recommended for shell-type transformers because of the mass and locations of fibrous materials used. The oil should be lowered a few centimetres below the cover and the windings should then be heated by short-circuiting one of them by means of connection suitable for the full load current of the shorted winding and applying a suitable voltage on the other. If the required power is to be obtained from a long overhead transmission line, suitable protection against over-voltages should be provided to avoid damage to the transformer during the dry out period. The success of this method depends upon:

a) correct loading to maintain the temperature of windings and insulation within safe limits,

b) correct oil temperature by reducing the normal load,

c) thorough ventilation to remove water vapour given off by the hot oil,

d) thorough lagging of the cover to prevent condensation of moisture, and

e) careful filtering and dielectric strength tests of the oil to determine when the transformer is dry.

8.2.1.2 The diaphragms of relief pipe should be removed and the manhole covers should be removed or raised about 15 cm to allow moist air to escape. All openings should be protected from the weather. The top of the main cover and relief pipe should be thoroughly lagged. Radiation from radiators or tubes may be prevented by lowering the oil below the top inlets. If radiators are provided with valves, the top valve may be closed to prevent circulation. Both the valves should not be closed since high pressure caused due to expansion may damage the valves. If the transformers are provided with taps, the connections should be so made that all the winding is in the circuit so that the entire winding may be dried. Filtering the oil will aid materially in removing the moisture and hasten the process of drying.

8.2.1.3 The more important points concerning the method of drying on which attention is to be focussed are the following:

a) Importance of continuing the drying out process without a break, maintaining the temperature of the oil in the transformer at a specified value of say 80°C. It may take weeks in some cases before the drying out is completed.

b) Maintaining a log sheet.

c) Introducing a purifier of the centrifugal or vacuum type provided with suitable heating elements and thermostat in addition to the heating of oil by the short-circuit method. The thermostat on the purifier is usually set to maintain an outlet temperature of 90°C. Oil is drawn from the transformer tank through a pipe dipped to the bottom and delivered back into the transformer tank at the top. The purifier has also to work continuously excepting for about an hour per day when it is opened up for cleaning the cones in the case of the centrifugal type or the filter pads in the case of the vacuum type.

d) In extreme cases where the dielectric strength of oil fails to improve despite this treatment over a period of 15 to 20 days, it may become necessary to blow a gentle stream of hot air at a temperature of about 150°C in the space between the top of the oil and the covering of the tank which is normally lifted for ventilation purposes.

NOTE — It is preferable to record the resistance value of each transformer winding before and after the heat-run test in order to calculate the maximum temperature of the winding and compare it with the oil temperature in order to ensure that no abnormal conditions occur during the drying process.

8.2.1.4 The following table shows the short-circuit current in percent of full load current which may be used for this method of drying of transformers with the corresponding maximum allowance of top oil temperature. Usually less than 5 percent of normal voltage will give sufficient current circulation in the windings. These temperature limits and loads shall be strictly adhered to in order to obtain desired results without damage to transformers.

Self-Cooled Transformers	*Water-Cooled Transformers*	*Top-Oil Temperature, Max*
Percent	Percent	°C
50	50	85
75	60	80
85	75	75

NOTE — It may be noted that the higher the allowable oil temperature, the smaller the load; which means that additional blanketing of the tank or reduced use of artificial cooling is required for the smaller currents than for higher currents in order to bring the oil temperature up to the values shown in the above table.

8.2.1.5 Drying should be continued until oil from the top and the bottom of tank withstands the voltage values given in Col 7 Sl No. 1 of Table 1 of IS : 1866-1978*, for 7 consecutive tests taken 4 hours apart

*Code of practice for maintenance and supervision of insulating oils in service (*first revision*).

Oil should be maintained at the maximum temperature for the load held without filtering. All ventilating openings should then be closed and the transformer kept at the same temperature for another 24 hours without filtering the oil and, as before, the oil should be tested at 4-hour intervals. A decrease in the dielectric strength of the oil indicates that moisture is still passing from the transformer into the oil. Unless constant or increasing dielectric strength is shown by the tests, the ventilators should be kept open, the oil filtered and the drying continued, till dielectric strength of oil and the insulation resistance of winding are together satisfactory.

8.2.2 *Drying with Oil Removed*

8.2.2.1 *By external heat* — The transformer may be placed in its own tank without oil. Externally heated air is blown into the tank at the bottom through the main oil valve. A small blower or fan should be used to get the proper circulation. It is necessary to force as much of the heated air as possible through the ducts in the transformer windings. To accomplish this, baffles should be placed between the core and the case, closing off as much of the space as possible. The best way to obtain the heated air is by blowing air through grid resistors. The resistors should be placed in a fireproof box. The temperature of the air entering from the grid should not exceed 115°C. Measure the temperature of the windings frequently by resistance measurements to make sure that the transformer is not overheated.

The heat may also be obtained by direct combustion and it is essential that none of the products of combustion be allowed to enter into the transformer tank. Heating the air by combustion is not recommended except where electric current is not available.

If for any reason it is not expedient to place the transformer in its own tank, it may be placed in a wooden box with holes near the bottom and top for circulating warm air. The same precautions as given for drying in its own tank should be taken to see that the air is forced to circulate through the oil ducts in the insulation.

It is essential that every precaution be taken to prevent fire when drying out by this method. The set-up shall be watched very carefully during the entire drying operation. If the blower should stop, the grid current should be switched off at once to prevent overheating.

8.2.2.2 *By both external and internal heat* — This is a combination of methods given in **8.2.2.1** and **8.2.2.2**. The transformer should be placed in its own tank, if possible, and all precautions taken as outlined under **8.2.2.2**. The current circulated in the windings should, of course, be less than that when drying out is done in accordance with **8.2.2.1** only.

8.2.3 *Drying Under Vacuum*

8.2.3.1 The vacuum method employing external heat is a quick and most effective way of drying transformer's insulation, where it can be used.

NOTE — Drying of transformers by internal heat should not be resorted to with the oil removed.

8.2.3.2 Many large transformers may be dried in their own tanks by this method if the tanks can safely withstand the external pressures resulting from a vacuum of 635 mm or more. Line and short-circuit connections may be made at the terminal bushing outside the tank, although when transformers have not been completely assembled, it is sometimes a better practice to connect to the high voltage windings through the low voltage bushings and short-circuit the low voltage windings inside the tank.

8.2.3.3 Temperature indicator leads for windings not connected to terminal bushings may be brought out through spark plugs tapped into temporary blank covers.

8.2.3.4 Except for the vacuum-tight tank, the drying procedure shall, in general, follow that described for the short-circuit method for transformers less than 5 000 kVA, 66 kV. For transformers of rating 5 000 kVA and above, or voltage 66 kV and above, it may be necessary to use additional means to distribute the heat to all parts of the insulation.

8.2.3.5 One method of distributing the heat is to blow hot air through the transformer in addition to circulating current in the windings. This makes use of external and internal heat. Another method is to cover the coils and insulation with oil to distribute the heat to the insulation and to heat by circulating current in windings. With both methods the maximum temperature of the insulation should be raised slowly to approximately 55°C in the first 8 hours; to 65°C in the second 8 hours, and 75 to 80°C in the third 8 hours. After 75 or 80°C temperature has been reached, the transformer should be disconnected from the source of power and if oil is used to distribute the heat, the oil should be drained out and a vacuum applied immediately. The vacuum should be a minimum of 635 mm, but preferably 710 mm. The vacuum should be maintained until the transformer is dry or until the temperature drops to 50°C when the heat shall be applied again and the cycle repeated. Megger readings should be taken every 3 or 4 hours and the drying process continued until the megger readings rise and become constant.

NOTE — Megger readings shall not be taken under vacuum.

8.2.3.6 The drying time after the vacuum has been obtained may vary from 8 to 150 hours or longer depending on the temperature, vacuum, size and conditions of the transformer, and the drying set-up. After the transformer is once thoroughly heated, it is possible to keep the temperature up by circulating a low current (usually 10 to 20 percent of the normal)

periodically for a short time. Check the temperature often. The temperature rise of copper in vacuum may be very rapid and the insulation may be overheated unless extreme caution is used until the amount and time of heating are determined by measurement. The temperature of the copper shall be checked by resistance measurement as there is no other satisfactory method to measure copper temperature when the coils are in vacuum. If the current is circulated in the windings under vacuum, the voltage should be kept to a minimum because the dielectric strength of air under partial vacuum is low. For this reason, it is generally better to short-circuit the high voltage winding and circulate the current from the low voltage winding.

NOTE — The choice of winding to be short-circuited mainly depends on convenience and no recommendation is made on the same.

8.2.3.7 It is inevitable that in the process of drying, insulation resistance values will be measured at varying temperatures. In order to, therefore, get consistent and correct picture of the drying process, the insulation resistance values corresponding to a constant temperature shall be plotted on the graph.

9. MEASUREMENT OF INSULATION RESISTANCE

9.1 General — The measurement of insulation resistance is of importance in determining the status of drying only when the transformer is without oil. If the initial insulation resistance is measured at ordinary temperature, it may be high although the insulation is not dry, but as the transformer is heated up, the insulation resistance value drops rapidly.

9.1.1 As the drying proceeds at a constant temperature, the insulation resistance will generally increase gradually until towards the end of the drying period when the increase becomes more rapid. Sometimes the resistance rises and falls through a short range one or more times before reaching a steady high point which is caused by moisture in the interior parts of the insulation working its way out through the outer portions which were dry at the beginning.

9.1.2 As the temperature varies, the insulation resistance also varies greatly. Therefore, the temperature should be kept nearly constant and the resistance measurements should all be taken at as nearly the same temperature as possible. The insulation resistance in megohms varies inversely with the temperature and for a 10°C change of temperature the megohms change by ratio generally in the range of 2 : 1 to 1·4 : 1. Measurements should be taken every 2 hours during the drying period.

9.1.3 The insulation resistance should be measured by at least 1 000 V megger. Every time the voltage should be applied for 1 minute.

9.2 Insulation Resistance Curve — A curve of the insulation resistance measurements helps in determining the drying time. It should be plotted

with time as abscissae and resistance as ordinate. By observation, the time of the curve (the point where the insulation resistance begins to increase more rapidly) may be determined and the run should continue until constant for 24 hours at a value as great or greater than suggested. It is recommended that the record of readings, including time, temperature and megohms, be submitted to the transformer manufacturer for comments before discontinuing drying, if adequate facilities for interpretation of megger readings do not exist with the user.

9.2.1 The insulation resistance should be taken with all windings earthed except the one being tested.

NOTE — The question of specifying recommended insulation resistance values is under consideration. In the meanwhile, manufacturers should provide the insulation resistance value measured at the works so that any subsequent measurement of the insulation resistance could be related to this. The curve of insulation resistance value against time generally takes the form as shown in Fig. 3.

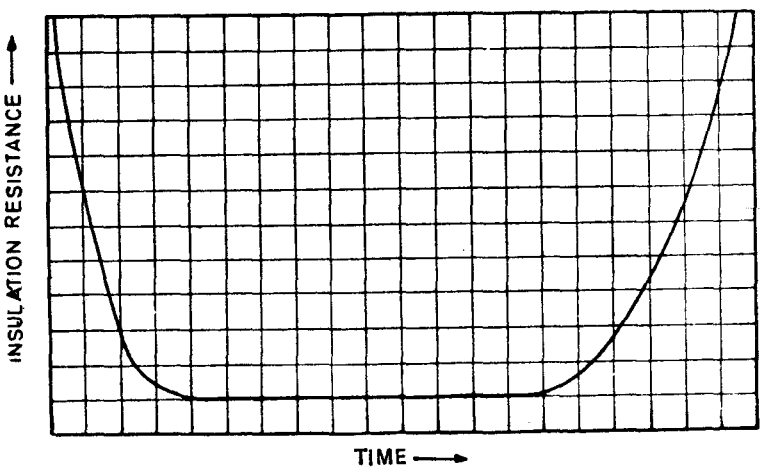

FIG. 3 CURVE SHOWING VARIATION OF INSULATION RESISTANCE WITH TIME OF DRYING

10. IMPORTANT FITTINGS AND ACCESSORIES AND THEIR INSTALLATION

10.1 Gaskets

10.1.1 Whenever blanking plates are removed to fix detached parts such as bushing, turrets, etc, a new gasket shall be used while fixing the same. A set of new unused gaskets of correct size and thickness is supplied with every transformer for this purpose. Gaskets shall be stored in hermetically

sealed containers in a cool place. They shall be protected from damp, oil and grease. To make a gasketed joint, first clean the metal surfaces ensuring that they are free from oil, rust scale, etc. Then a film of the special gasket adhesive if supplied by the manufacturer may be applied to one of the surfaces. The gasket may be then stuck to the surface after the lapse of a few minutes. The other metal surface may also be given a film of adhesive and placed over the gasket. Both may then be tightened according to the special instructions of the manufacturer.

10.2 Bushings

10.2.1 Normally three types of bushings are used:

a) Plain porcelain type,

b) Plain oil-filled type, and

c) Condenser type.

10.2.2 The bushings shall be checked for any damage at the oil end as well as the porcelains before fixing, bushings shall be cleaned thoroughly. The bushings shall be lifted by using the lifting eyes and soft manila ropes. Wire ropes or slings shall not be used. The line lead of H.V. winding if coiled inside the transformer is drawn through the bushing using a string when the bushing is lowered into position. The cable ferrule is fixed in position at the top of the bushing brass tube. The lower end of the bushing shall be inspected through the inspection cover for proper sealing. The line connection should be tight and should not strain the terminals. Sufficient flexibility in the connecting leads should also be provided to avoid mechanical stress on the bushing. The arcing horns if any shall be in proper position as shown by the supplier in general arrangement drawing.

10.3 Tap Changers

10.3.0 Change over switch or link arrangement provided in a multi-ratio transformer has to be checked for proper ratio.

10.3.1 *Off-Circuit Tap Switch* — The off-circuit tap switch form an integral part of the transformer. Since the operation is to be carried out from outside, the operating handle may at times be despatched separately. This has to be fitted as per manufacturer's instructions. Care has to be taken to have correct alignment of the handle. The tap number on the outside should correlate with the actual position of tap changer. This is confirmed when the ratio tests are done.

Before changing taps, isolate the transformer from supply on all windings. In no case should the tap switch handle be left half way and unlocked to prevent damage due to inadvertent operation.

10.3.2 *On-Load Tap Changers* — If the tap changer is despatched separately from works, it is to be fitted on the tank. Before mounting on

the tank, the insulation resistance value of each tap changer leads to earth should be measured and in case of low value, the cause should be investigated. The leads from the tap changers are then connected to their respective position on the terminal board provided on the tank. The tightness of all connections on the selector switch and terminal board is ensured.

The tap changer is then to be filled with clean oil and drying out is to be carried out. Oil filling and drying out is carried out simultaneously along with the transformer as explained earlier.

10.4 Cooling Equipments

10.4.1 The cooling equipments and associated pipe-work and fittings are to be thoroughly cleaned and flushed with clean dry transformer oil before assembly. The pressure gauges, differential pressure gauges etc, if any, are fitted in position. The cooler and associated pipework is then filled with clean dry oil keeping all the cooler circuit open, except the transformer inlet and outlet valves. Air is released from all the pipework during filling. The oil is circulated through a filter press using the filter valves provided in the cooler inlet and outlet branches.

The cooler control circuit is to be checked for correct operation in all positions of the selector switch. Test push buttons are provided for checking of the working of motors individually. The cooler system is then connected to the main tank by opening the tank inlet and outlet valves.

10.4.2 *Cooling Fans* — Cooling fans are mounted as per manufacturer's instructions. The fans are tested for insulation value and normal running before they are mounted.

10.4.3 *Separate Coolers*

10.4.3.1 *Forced oil cooled transformers* — In the case of forced oil cooled transformers, oil pumps are provided for circulating the oil. The pumps are despatched separately after blanking both suction and delivery sides. The pump is connected at the proper position as per the general arrangement drawing. New gaskets should be used at the joints and the bolts tightened. The pipework at the pump connection is done as per the matching marks on the flanges to avoid undue stress on the flanges of the pump when the bolts are tightened. In some pumps an air release plug is provided on the body. This plug should be checked for tightness.

Oil flow meters are provided on the pipe line connecting the pump. The flow meter being a delicate instrument is packed separately and sent. The flow meter should be taken out carefully and mounted on the flange provided on the pipe connection. The mounting position should be as per the outline general arrangement drawing.

In large transformers the radiators are sometimes separately mounted. In such cases there will be a header each at top and bottom which are

supported on frames. Flanges are provided on these headers for fixing the radiators. Radiator valves are fitted to the headers and despatched. The end frames are to be erected first. The frames should be positioned correctly with respect to the transformer. The distances between centre lines of transformer and cooler should be strictly as per the general arrangement drawing as otherwise the connecting pipework will not match. After erecting the end frames the top and bottom headers are mounted. The headers will have to be properly levelled so that the connecting pipework can be easily fixed. Then radiators are fixed.

If the conservator is to be provided on the cooler the same may be mounted on it and all fittings for the same attached.

The interconnecting pipework may be done taking care to connect correct pieces at the correct location. Usually expansion joints are provided in the pipe line connecting the transformer tank to the cooler. Special care should be taken to see that this is installed correctly.

10.4.3.2 *Forced water cooled transformers* — In the case of forced water cooled transformers the oil to water shell tube heat exchangers are despatched separately and properly blanked. On receipt at site, it shall be checked whether blanking is all right. If the blanking is found to be defective, the matter has to be referred to the manufacturer. In such a case, moisture/rain water might have entered the heat exchanger oil circuit and there might be rusting. It may be necessary to take out the different parts of heat exchangers separately and clean them thoroughly and put them back.

The brackets for mounting the heat exchanger may be attached to the transformer first taking care of the matching marks. The heat exchanger may then be mounted on the support in the correct position after referring to the general arraagement drawing.

The oil pump, oil flow meter and the connecting pipes may be fixed after this, in the correct position. In the water circuit the necessary water pipes may be connected. It is also to be made sure that on the outlet side water is allowed to discharge freely without any obstructions. Usually a water flow meter is placed on the outlet pipe to indicate that there is a positive water flow. It is to be made sure that there is no restriction in the water outlet pipe as any obstruction in this pipe will increase the pressure in the water circuit and may result in the water pressure exceeding the oil pressure and creating leakage of water into oil circuit which is detrimental to the transformer.

The heat exchanger oil circuit is sealed from the water circuit with special seals and the circuit is pressure tested at the supplier's work to make it absolutely sure that there is no leakage. The sealing should not be tempered with in any manner as it is detrimental to the transformer. If

there is any doubt about this sealing, the matter should be intimated to the manufacturer.

10.5 Conservator

10.5.0 All transformers of ratings of 50 kVA and above are normally provided with conservator tanks and dehydrating breathing devices, hermetically sealed or nitrogen filled tanks or other equally suitable means, to prevent ingress of moisture into transformer tanks.

10.5.1 Conservator, where fitted, should be assembled with its pipework, etc, making sure that all gasketed joints are oil-tight and the pipework is clean and free from moisture. The mechanism of the float type oil gauge inside the conservator might be locked to prevent damage during transit. After placing the conservator in position, it should be released by turning the locking belt in the direction indicated on the plate.

10.5.2 While topping up oil in the transformer, it should be ensured that oil is filled to a level indicated by the oil gauge on the conservator commensurate with the filling oil temperature.

10.6 Buchholtz Relay

10.6.1 The Buchholtz is checked for correct functioning of the mercury switches by injecting air through the test petcock when full of oil. When mounting on the pipework, the correct direction is maintained with the help of arrow provided. The angle of inclination is also to be checked and should be between 3° and 7°. The gas release pipe if provided is to be connected to the petcock. In service the top petcock should be open and the gas release pipe should be full with oil. When the gas is to be collected through the gas release pipe, initially the oil will flow out and then the gas can be collected.

Each time after removal of trapped gas from the relay, this pipe should be primed to the full with oil. If there is any residual air left in the pipe, this would vitiate the correct analysis of the accumulated gas.

10.7 Dehydrating Breathers

10.7.1 The breather pipework shall be properly cleaned. The oil level in the oil seal at the bottom should be filled to the correct level with transformer oil. Any oil that might have overflown should be wiped off. It is to be ensured that the breathing hole at the bottom of the seal is not blocked by dirt, etc. The silicagel to be filled into the breather shall have blue colour.

10.8 Explosion Vent

10.8.1 The temporary cover which is provided over the explosion vent flange on the tank cover, should be removed and the explosion vent fitted

with suitable gaskets, care being taken to ensure that the top diaphragm with its gaskets makes an air-tight joint. As the top diaphragm is sent blanked from works, the blanking plate shall not be removed till the oil level inside the transformer comes above the tank cover.

10.9 Temperature Indicators

10.9.1 Before installing, the accuracy of the instrument shall be checked by hot oil or water bath. The switches are adjusted to make contact at the desired temperature depending upon the site conditions, that is, ambient temperature, loading conditions, etc.

10.9.2 The capillary tube is protected adequately to withstand all normal handling. It should not, however, be bent sharply or repeatedly and should be supported by clips to prevent sagging. On no account it shall be cut.

10.9.3 The thermometer pocket should be filled with sufficient transformer oil to ensure good thermal contact between the pocket wall and the thermometer bulb.

10.9.4 The connection of the winding temperature indicator C.T. is made to the thermometer pocket as per instruction given on the Terminal Board.

10.10 Current Transformers

10.10.1 Great care shall be taken in handling current transformers. Current transformers should be kept flat at all times. If the transformer is not handled properly, it will deform in shape resulting in an increase in excitation current. All C.T. secondary terminals should be short circuited or loaded before energising the transformer. This will prevent excessive voltage developing across C.T. secondary which can damage the C.T. and be a hazard if touched. Excessive magnetisation of the C.T. core in this manner may affect the ratio accuracy also.

11. COMPLETION OF ERECTION WORK

11.1 Final topping up is now done up to a level in conservator commensurate with filling oil temperature with clean dry oil and any other work such as wiring of various alarm/trip contacts, fan motors, pump motor and other apparatus, earthing of neutral and tank is completed. The interposing valves between the radiators and the tank are opened. Tank surface is retouched with paint wherever required and transformer is made ready for commissioning tests.

12. TESTING AND COMMISSIONING

12.0 General Consideration

12.0.1 *Parallel Operation* — For satisfactory operation in parallel, the concerned transformers shall have identical (a) phase displacement,

(b) voltage ratio, and (c) equal percentage impedance within permissible tolerances. They shall be so connected that their polarity and phase rotation are identical. Provided the polarities of the winding correspond, transformers with the following connections operate satisfactorily in parallel. Connections in Group A shall not be paralleled with those in Group B.

Group A — star/star, delta/delta, and delta/zig-zag.

Group B — delta/star, star/delta, and star/zig-zag.

12.0.1.1 Transformers designed for parallel operation shall not be required to divide the load within limits closer than to permit an individual variation from the rated output of any transformer of the group amounting to ± 10 percent of such rated output when the total load on the group is equal to the sum of the rated outputs of all the transformers so connected. In addition, the rated outputs of the smallest transformer in the group should be not less than 33 percent of the rated output of the largest transformer in the group.

12.0.2 *Polarity and Phasing Out* — When connecting a new transformer special care should be taken to do so in accordance with the diagram of connections supplied by the manufacturer taking into account, at the same time, the phase sequence of the supply. In case of three-phase transformers, if connections are not made in the correct phase sequence, the outgoing supply may also be of wrong phase sequence. This would necessitate breaking down of connections and remaking the high voltage cable connections.

For conventions regarding phase sequences *see* IS : 375-1963*.

12.0.2.1 It is immaterial whether the phase rotation is clokwise or anti-clockwise so long as it is the same for all the transformers that have to work in parallel. However, it is recommended that the standard phase sequences in accordance with the Indian and International practice, namely, red, yellow and blue sequences in the anti-clockwise direction, should be adopted. A positive check will help in ensuring correct external corrections. The simplest way is to connect two transformers in parallel on primary sides: connect the secondary terminals of one transformer to its bus-bars, and connect one terminal of the second transformer to the bus-bars, which, it is assumed, corresponds to the equivalent terminal of the first transformer. After ensuring that both transformers are on the same tap, voltage readings between the remaining secondary terminals of the two transformers and the bus-bars be taken. If both readings are zero, the transformers are of the same polarity and phase rotation and the connections may be made permanent.

*Marking and arrangements for switchgear bus-bars, main connections and anxiliary waring (*revised*).

12.0.2.2 In the case of star connected secondaries, an alternative arrangement to the secondary connections indicated above is to connect the star points to each other. (This connection may be via earth in which case, of course, none of the secondary terminals will be connected to the bus-bars before closing.)

NOTE — It should be noted that under the above circumstances it is also possible for the voltage reading to be double of the secondary voltage which will be when the voltage reading happens to be across unlike phases. It is, therefore, necessary that care is taken to see that the range of the voltmeter is equivalent to the sum of the secondary voltages of the two transformers.

12.1 Testing Before Commissioning

12.1.1 The tests to be carried out at site before commissioning the transformer will depend upon the voltage and kVA rating of the transformer, facilities available at site and conditions of contract. Appendix B gives typical tests to be carried out.

APPENDIX A

(*Clause* 7.3.0)

TOOLS AND EQUIPMENT REQUIRED FOR INSTALLATION WORK

A-0. Given below is a general list of tools and other equipment used in the erection of a transformer. The capacity, sizes, etc, of these will depend on the type and size of the transformer.

A-1. LIFTING EQUIPMENT

A-1.1 Depending upon the indoor erection or outdoor erection of the transformer, crane of sufficient capacity will be required. In the absence of crane facility, a derrick is erected and work carried out using a chain and pulley block. Wire rope slings, D-shackles, etc, are also required.

A-2. OIL PURIFIER

A-2.1 A vacuum oil purifier of sufficient capacity provided with thermostatically controlled heating facility is required. The following table may be used as a guide for selecting the oil purifier capacity :

Oil Purifier Capacity	*Quantity of Oil to be Purified*
litre/h	litre
2 500	up to 20 000
5 000	up to 50 000
10 000	More than 50 000

A-3. VACUUM PUMP

A-3.1 A vacuum pump with vacuum hose and other fittings capable of producing a vacuum up to 759 mm mercury.

A-4. OIL STORAGE TANK

A-4.1 One or more oil tanks of sufficient capacity to store the entire quantity of the transformer oil will be useful for filling from drums. This will reduce the time of filling.

A-5. PRESSURE VACUUM GAUGE

A-5.1 Of desired accuracy for checking inert gas pressure.

A-7. MISCELLANEOUS

a) Oil testing apparatus conforming to IS : 335.

b) 2 500/1 000 V megger.

c) Voltmeters, milli-ammeter, low power factor watt meter, voltmeter 0 to 500 V, 0 to 100 V range and 0 to 5 V range.

d) Avometer.

e) Set of spanners.

f) Set of drum opener, crowbar, pipes, hammer, etc.

g) Set of screw drivers, cutting pliers, screw spanners and pipe wrench.

h) Clean cotton cloth and cotton waste.

j) Electric hand lamp.

k) 12 mm venyl hose of approximate 10 m length for being used as an oil level indicator during erection.

m) Brushes for painting.

n) PVC wires for connecting meters during testing.

APPENDIX B

(*Clause* 12.1.1)

TYPICAL TESTS CARRIED OUT BEFORE COMMISSIONING

1) General inspection	a) Control and relay panels, etc. b) Junction boxes and marshalling kiosks.
2) Secondary injection	On all transformer protection relays
3) Primary injection (also to be repeated at the end of all other commissioning tests)	a) Tests on operation and stability of earthfault relays on high voltage side. b) Tests on line directional elements of high-voltage line relays. c) Tests on high speed neutral ammeter. d) Tests on overcurrent relays on low-voltage side. e) Tests on operation and stability of earthfault relays on low-voltage side. f) Tests on operation of standby earthfault relay on low-voltage side. g) Tests on overcurrent relay on high-voltage side (when current transformers are not in transformer bushings). h) Voltage compensation.
4) Ratio tests	a) With 415 V applied on high-voltage side, measure the voltage between all phases on the low-voltage side for every tap position. b) To check phasing, measure volts : A to a, b and c B to a, b and c C to a, b and c where A, B and C are the terminals of three phases on high-voltage side and a, b and c are the corresponding terminals on low-voltage side. c) Magnetic balance test.

5) Tripping tests	a) High voltage. b) Low voltage. c) Intertripping tests. d) Winding temperature trips.
6) Calibrate earthing resistance	
7) Buchholtz relays	a) Tests for angle, air injection, etc. b) Check that there is no air in protector before commissioning. c) When energising transformer, close in on 'Trip', etc. d) Check for stability when oil pumps are started : 1) at ambient temperature, 2) at a winding temperature of 80°C or above.
8) Alarm circuits	a) Buchholtz relay b) Oil and winding temperature thermometer. c) Cooling gear failure.
9) Fans and pumps	a) Check that the oil valves are open in cooling circuit. b) Check the rotation of pumps, automatic starting overload devices, etc. c) Check stability of Buchholtz relay [*see* 7 (d) above].
10) Tap changing tests to check mechanism, indication, buzzer, lamp, etc	
11) Phasing tests	a) At 415 V [*see* 4 (b) above]. b) Between transformers in a bank. c) To prove internal and external connection for parallel operation. d) On auxiliary supplies and voltage transformers.

12) Insulation tests	a) On high and low voltage windings. b) On current and voltage transformers, circuits, etc.
13) Site test for oil	a) check oil level. b) dielectric test. c) volume resistivity. d) acidity, and e) tan delta f) water content.
14) Voltage compensation test (if compensating current transformers are fitted)	a) Primary injection [*see* 3 (h) above]. b) Load tests [*see* 20 (g) below]. c) If necessary, switch in with relays connected to correctly compensated voltages from the other transformer.
15) See that neutral earthing switches are closed before making alive	
16) Check transformers on equal taps before switching in	a) For transformers in a bank. b) For transformers in parallel.
17) Set down relays before closing in—advise control	
18) If necessary, arrange temporary protection for soaking and switching in, for example unrestricted earthfault, if soaking from low voltage side with 113 V and 213 V open.	
19) Set up relays after soaking and before going on load—advise control.	
20) Load tests	a) Voltmeter, ammeters, etc, on both high and low voltage sides. b) Overcurrent. c) No spill in high voltage starpoint. d) No creeping of contacts on both high and low voltage earthfault relays.

e) Voltages on relays.

f) Directional elements — low voltage, directional overcurrent and the earth-fault relays (if fitted).

g) Voltage compensation.

21) Tap changing test on load over full range of taps

22) Advise control of any new equipment commissioned

23) If possible for transformers rated above 1 000 kVA, when being energised for the first time, the voltage should be built up gradually

24) Low voltage excitation current

25) Single-phase, magnetic balance test

(*Continued from page* 2)

Panel for Selection, Installation and Maintenance of Transformers, ETDC 20/P24

Convener	*Representing*
SHRI C. R. VARIER	Crompton Greaves Ltd, Bombay
Members	
SHRI S. V. MANERIKAR (*Alternate* to Shri C. R. Varier)	
SHRI M. M. BANDRE	Maharashtra State Electricity Board, Bombay
CHIEF ENGINEER (ELEC)-I SHRI A. MAZUMDAR (*Alternate*)	Central Public Works Department, New Delhi
SHRI T. K. GHOSE SHRI G. CHATTERJEE (*Alternate*)	Calcutta Electric Supply Corporation Ltd, Calcutta
SHRI M. M. JOAG	Voltas Ltd, Bombay
SHRI T. OMKUMAR SHRI K. V. JAYADEV (*Alternate*)	NGEF Limited, Bangalore
SHRI N. R. SANTHANAM SHRI M. N. BAPAT (*Alternate*)	Tata Consulting Engineers, Bombay
SHRI P. S. SAWHNEY SHRI P. D. SHARMA (*Alternate*)	Delhi Electric Supply Undertaking, New Delhi
SENIOR MANAGER DEV (E) SHRI D. P. GUPTA (*Alternate*)	Bharat Heavy Electricals Ltd, Secunderabad
SHRI I. N. THUKRAL SHRI J. L. ARORA (*Alternate*)	Haryana State Electricity Board, Chandigarh

BUREAU OF INDIAN STANDARDS

Headquarters:
Manak Bhavan, 9 Bahadur Shah Zafar Marg, NEW DELHI 110002
Telephones: 323 0131, 323 3375, 323 9402
Fax : 91 11 3234062, 91 11 3239399, 91 11 3239382

Telegrams : Manaksanstha
(Common to all Offices)

	Telephone
Central Laboratory:	
Plot No. 20/9, Site IV, Sahibabad Industrial Area, Sahibabad 201010	8-77 00 32
Regional Offices:	
Central : Manak Bhavan, 9 Bahadur Shah Zafar Marg, NEW DELHI 110002	323 76 17
*Eastern : 1/14 CIT Scheme VII M, V.I.P. Road, Maniktola, CALCUTTA 700054	337 86 62
Northern : SCO 335-336, Sector 34-A, CHANDIGARH 160022	60 38 43
Southern : C.I.T. Campus, IV Cross Road, CHENNAI 600113	235 23 15
†Western : Manakalaya, E9, Behind Marol Telephone Exchange, Andheri (East), MUMBAI 400093	832 92 95
Branch Offices:	
'Pushpak', Nurmohamed Shaikh Marg, Khanpur, AHMEDABAD 380001	550 13 48
‡Peenya Industrial Area, 1st Stage, Bangalore-Tumkur Road, BANGALORE 560058	839 49 55
Gangotri Complex, 5th Floor, Bhadbhada Road, T.T. Nagar, BHOPAL 462003	55 40 21
Plot No. 62-63, Unit VI, Ganga Nagar, BHUBANESHWAR 751001	40 36 27
Kalaikathir Buildings, 670 Avinashi Road, COIMBATORE 641037	21 01 41
Plot No. 43, Sector 16 A, Mathura Road, FARIDABAD 121001	8-28 88 01
Savitri Complex, 116 G.T. Road, GHAZIABAD 201001	8-71 19 96
53/5 Ward No. 29, R.G. Barua Road, 5th By-lane, GUWAHATI 781003	54 11 37
5-8-56C, L.N. Gupta Marg, Nampally Station Road, HYDERABAD 500001	20 10 83
E-52, Chitaranjan Marg, C-Scheme, JAIPUR 302001	37 29 25
117/418 B, Sarvodaya Nagar, KANPUR 208005	21 68 76
Seth Bhawan, 2nd Floor, Behind Leela Cinema, Naval Kishore Road, LUCKNOW 226001	23 89 23
NIT Building, Second Floor, Gokulpat Market, NAGPUR 440010	52 51 71
Patliputra Industrial Estate, PATNA 800013	26 23 05
Institution of Engineers (India) Building 1332 Shivaji Nagar, PUNE 411005	32 36 35
T.C. No. 14/1421, University P.O. Palayam, THIRUVANANTHAPURAM 695034	6 21 17

*Sales Office is at 5 Chowringhee Approach, P.O. Princep Street, CALCUTTA 700072 — 27 10 85

†Sales Office is at Novelty Chambers, Grant Road, MUMBAI 400007 — 309 65 28

‡Sales Office is at 'F' Block, Unity Building, Narashimaraja Square, BANGALORE 560002 — 222 39 71

Printed at Simco Printing Press, Delhi